SECTION BCS
BODY CONTROL SYSTEM

CONTENTS

BASIC INSPECTION

INSPECTION AND ADJUSTMENT

ADDITIONAL SERVICE WHEN REPLACING CONTROL UNIT

ADDITIONAL SERVICE WHEN REPLACING CONTROL UNIT : Description

INFOID:0000000001712648

When replacing BCM, save or print current vehicle specification with CONSULT-III configuration before replacement.
Configuration has three functions as follows
- READ CONFIGURATION is the function to read (extract) vehicle configuration of current BCM.
- WRITE CONFIGURATION - Manual selection is the function to select and write vehicle configuration on BCM manually.
- WRITE CONFIGURATION - Config file is the function to write vehicle configuration with the data extracted from current BCM.

CAUTION:
- **When replacing BCM, you must perform WRITE CONFIGURATION with CONSULT-III.**
- **Complete the procedure of WRITE CONFIGURATION in order.**
- **If you set incorrect WRITE CONFIGURATION, incidents will occur.**
- **Configuration is different for each vehicle model. Confirm configuration of each vehicle model.**

ADDITIONAL SERVICE WHEN REPLACING CONTROL UNIT : Special Repair Requirement

INFOID:0000000001712649

1. SAVING VEHICLE SPECIFICATION

Perform “READ CONFIGURATION” with CONSULT-III to save or print current vehicle specification.

>> GO TO 2

2. REPLACE BCM

Replace BCM. Refer to BCS-54, "Removal and Installation".

>> GO TO 3

3. WRITING VEHICLE SPECIFICATION

Perform “WRITE CONFIGURATION - Config file” or “WRITE CONFIGURATION - Manual selection” with CONSULT-III to write vehicle specification. Refer to BCS-3, "ADDITIONAL SERVICE WHEN REPLACING CONTROL UNIT : Special Repair Requirement".

>> GO TO 4

4. INITIALIZE BCM (NATS)

Perform BCM initialization. (NATS)

>> WORK END

CONFIGURATION

CONFIGURATION : Description

INFOID:0000000001712650

Vehicle specification needs to be written with CONSULT-III because it is not written after replacing BCM.
Configuration has three functions as follows
- READ CONFIGURATION is the function to read (extract) vehicle configuration of current BCM.
- WRITE CONFIGURATION - Manual selection is the function to select and write vehicle configuration on BCM manually.
- WRITE CONFIGURATION - Config file is the function to write vehicle configuration with the data extracted from current BCM.

CAUTION:

- **When replacing BCM, you must perform WRITE CONFIGURATION with CONSULT-III.**
- **Complete the procedure of WRITE CONFIGURATION in order.**
- **If you set incorrect WRITE CONFIGURATION, incidents will occur.**
- **Configuration is different for each vehicle model. Confirm configuration of each vehicle model.**

CONFIGURATION : Special Repair Requirement

INFOID:0000000001712651

1. WRITING VEHICLE SPECIFICATION

Perform “WRITE CONFIGURATION” with CONSULT-III.

When writing saved data>>GO TO 2
When writing manually>>GO TO 3

2. PERFORM “WRITE CONFIGURATION - CONFIG FILE”

Perform “WRITE CONFIGURATION - Config file” with CONSULT-III.

>> WORK END

3. PERFORM “WRITE CONFIGURATION - MANUAL SELECTION”

For “WRITE CONFIGURATION - Manual selection”, using the following flow chart, identify the correct model and configuration list.
Confirm and/or change setting value for each item according to the configuration list.
Depending on CONSULT-III software version being used, some or all of the write configuration items shown in the following configuration lists may be displayed. If an item does not display on the CONSULT-III “WRITE CONFIGURATION - Manual selection” screen, then it is an auto setting item and it cannot be manually set or changed.

MANUAL SETTING ITEM	
Items	Setting value
FR FOG LAMP	WITH⇔WITHOUT
DTRL	WITH⇔WITHOUT
SPEED SENS WIP	WITH⇔WITHOUT
DISPLAY STYLE	MODE2*
THEFT ALARM	WITH⇔WITHOUT

*: Do not apply MODE1, MODE3 or MODE4
NOTE:
Confirm vehicle model. Refer to GI-32, "Model Variation".

>> WORK END

FUNCTION DIAGNOSIS

BODY CONTROL SYSTEM

System Description

INFOID:0000000001712652

OUTLINE

- BCM (Body Control Module) controls the various electrical components. It inputs the information required to the control from CAN communication and the signal received from each switch and sensor.
- BCM has combination switch reading function for reading the operation status of combination switches (light, turn signal, wiper and washer) in addition to a function for controlling the operation of various electrical components. It also has the signal transmission function as the passed point of signal and the power consumption control function that reduces the power consumption with the ignition switch OFF.
- BCM is equipped with the diagnosis function that performs the diagnosis with CONSULT-III and various settings.

BCM control function list

System	Refer to
Combination switch reading system	BCS-7, "System Diagram"
Signal buffer system	BCS-12, "System Diagram"
Power consumption control system	BCS-13, "System Diagram"
Auto light system	EXL-11, "System Diagram"
Turn signal and hazard warning lamp system	EXL-15, "System Diagram"
Headlamp system	EXL-7, "System Diagram"
Front fog lamp system (if equipped)	EXL-14, "System Diagram"
Daytime running light system	EXL-9, "System Diagram"
Interior room lamp control system	INL-6, "System Diagram"
Step lamp system	INL-6, "System Diagram"
Interior room lamp battery saver system	INL-13, "BATTERY SAVER : CONSULT-III Function"
Front wiper and washer system	WW-4, "System Diagram"
Rear wiper and washer system	WW-8, "System Diagram"
Warning chime system	WCS-4, "WARNING CHIME SYSTEM : System Diagram"
Door lock system	• WITH INTELLIGENT KEY SYSTEM: DLK-12, "DOOR LOCK AND UNLOCK SWITCH : System Diagram" • WITHOUT INTELLIGENT KEY SYSTEM: DLK-199, "DOOR LOCK AND UNLOCK SWITCH : System Diagram"
(NATS) Nissan anti-theft system	• WITH INTELLIGENT KEY SYSTEM: SEC-13, "System Diagram" • WITHOUT INTELLIGENT KEY SYSTEM: SEC-101, "System Diagram"
Vehicle security system	• WITH INTELLIGENT KEY SYSTEM: SEC-17, "System Diagram" • WITHOUT INTELLIGENT KEY SYSTEM: SEC-104, "System Diagram"
Rear window defogger system	DEF-4, "System Diagram"
Remote keyless entry system	DLK-201, "REMOTE KEYLESS ENTRY : System Diagram"
Intelligent Key system (if equipped)	DLK-19, "INTELLIGENT KEY : System Diagram"
Power window system	PWC-5, "System Diagram"
RAP (retained accessory power) system	PWC-9, "RETAINED PWR : CONSULT-III Function (BCM - RETAINED PWR)"
TPMS (tire pressure monitoring system)	WT-8, "System Diagram"

Component Parts Location

INFOID:0000000001712653

- BCM M18, M19, M20 (view with instrument panel removed)

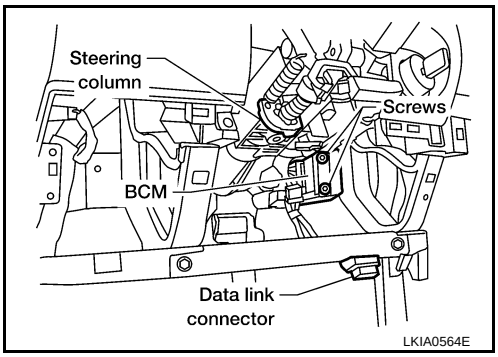

COMBINATION SWITCH READING SYSTEM

System Diagram

INFOID:0000000001712654

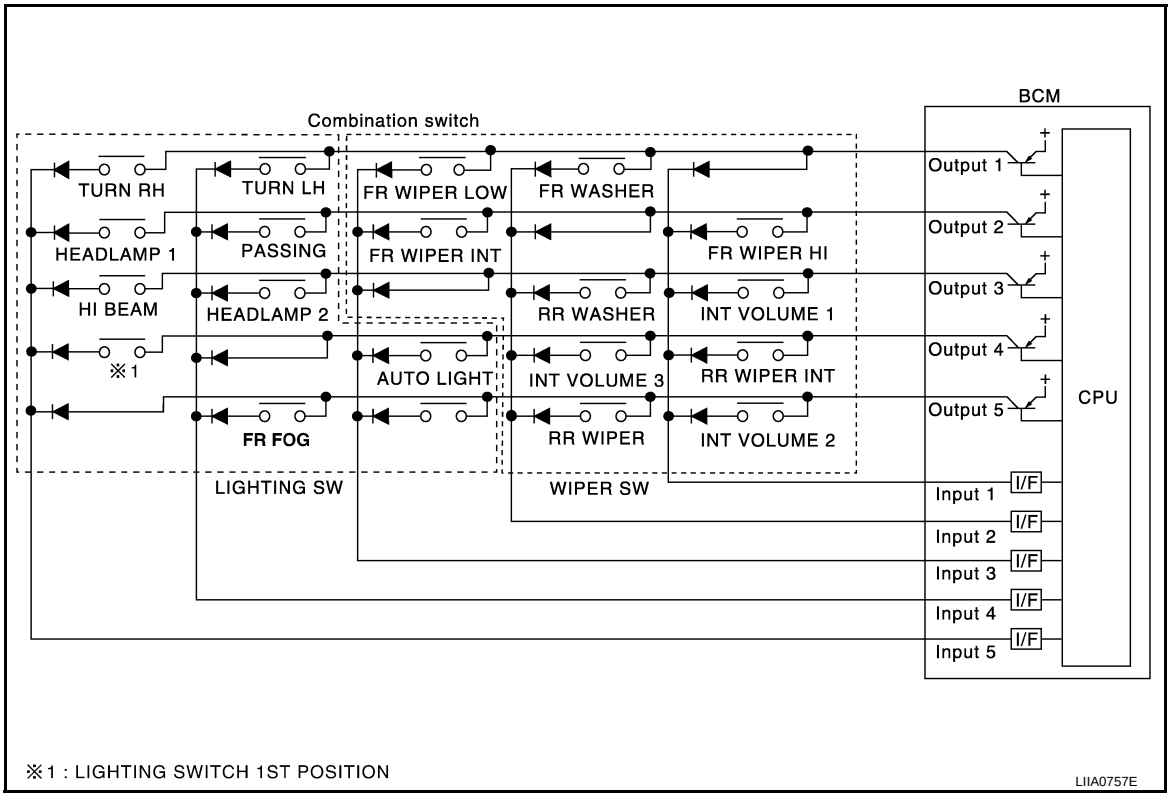

System Description

INFOID:0000000001712655

OUTLINE

- BCM reads the status of the combination switch (light, turn signal, wiper and washer) and recognizes the status of each switch.
- BCM is a combination of 5 output terminals (OUTPUT 1 - 5) and 5 input terminals (INPUT 1 - 5). It reads a maximum of 20 switch status.

COMBINATION SWITCH MATRIX

Combination switch circuit

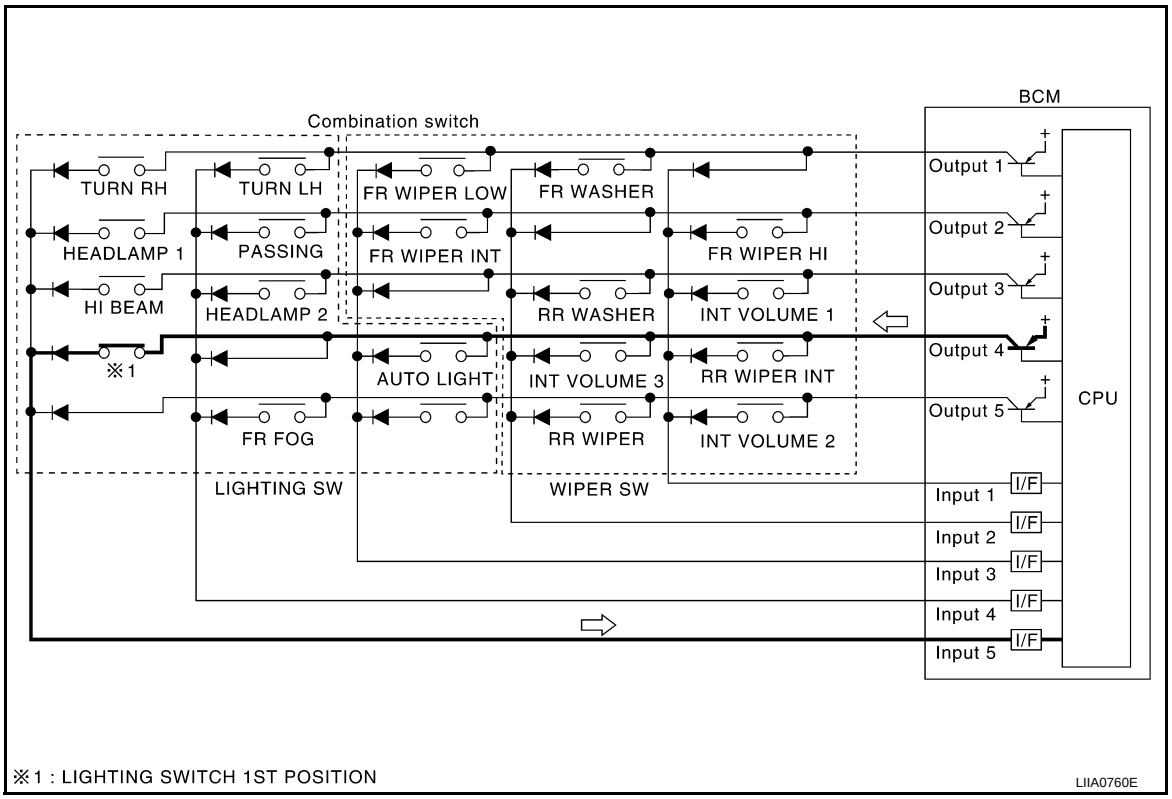

Combination switch INPUT-OUTPUT system list

System	OUTPUT 1	OUTPUT 2	OUTPUT 3	OUTPUT 4	OUTPUT 5
INPUT 1	—	FR WASHER	FR WIPER LOW	TURN LH	TURN RH
INPUT 2	FR WIPER HI	—	FR WIPER INT	PASSING	HEADLAMP 1
INPUT 3	INT VOLUME 1	RR WASHER	—	HEADLAMP 2	HI BEAM
INPUT 4	RR WIPER INT	INT VOLUME 3	AUTO LIGHT	—	TAIL LAMP
INPUT 5	INT VOLUME 2	RR WIPER	—	FR FOG	—

NOTE:

Headlamp has a dual system switch.

COMBINATION SWITCH READING FUNCTION

Description

- BCM reads the status of the combination switch at 10 ms interval normally.

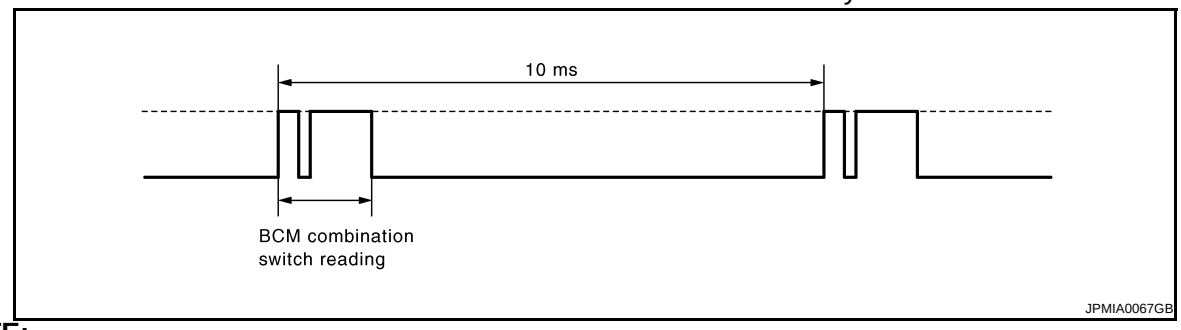

NOTE:

BCM reads the status of the combination switch at 20 ms interval when BCM is controlled at low power consumption control mode.

- BCM operates as follows and judges the status of the combination switch.
- INPUT 1 - 5 outputs the voltage waveforms of 5 systems simultaneously.
- It operates the transistor on OUTPUT side in the following order: OUTPUT 5 → 4 → 3 → 2 → 1.

- The voltage waveform of INPUT corresponding to the formed circuit changes according to the operation of the transistor on OUTPUT side if any (1 or more) switches are ON.
- It reads this change of the voltage as the status signal of the combination switch.

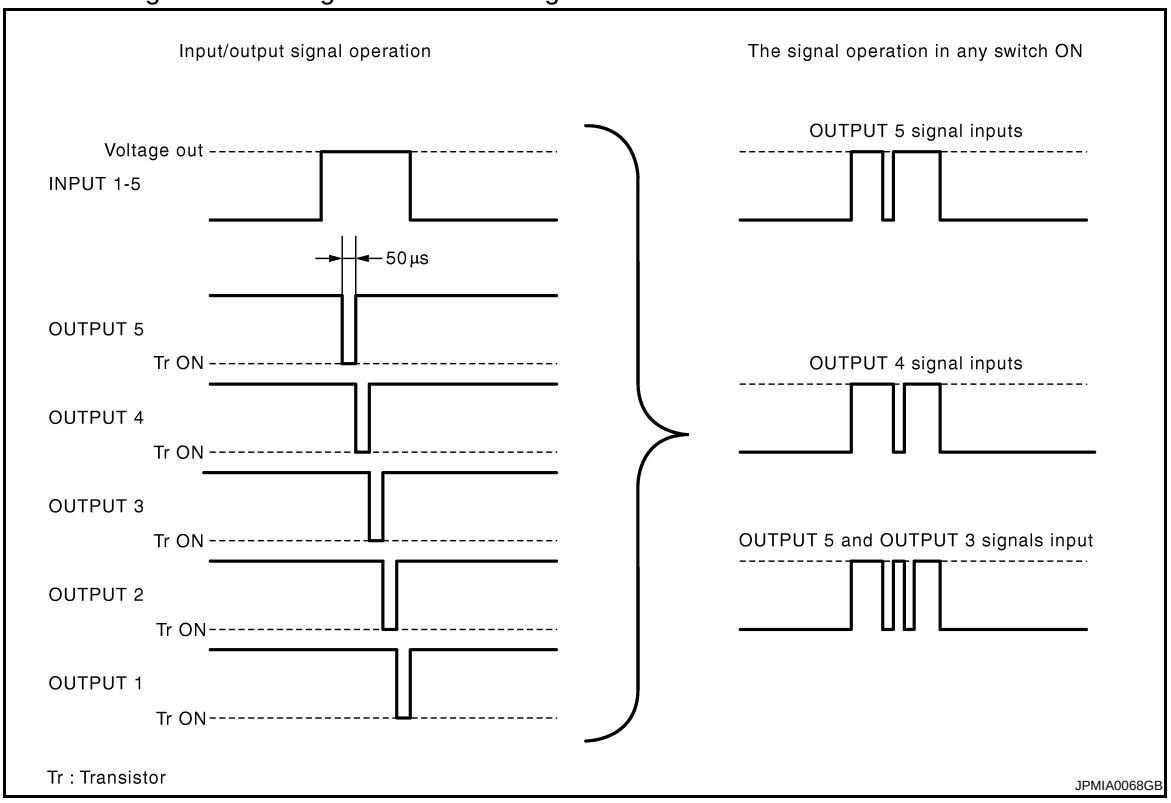

Operation Example

In the following operation example, the combination of the status signals of the combination switch is replaced as follows: INPUT 1 - 5 to “1 - 5” and OUTPUT 1 - 5 to “A - E”.

Example 1: When a switch (TURN RH switch) is turned ON

- The circuit between INPUT 1 and OUTPUT 5 is formed when the TURN RH switch is turned ON.

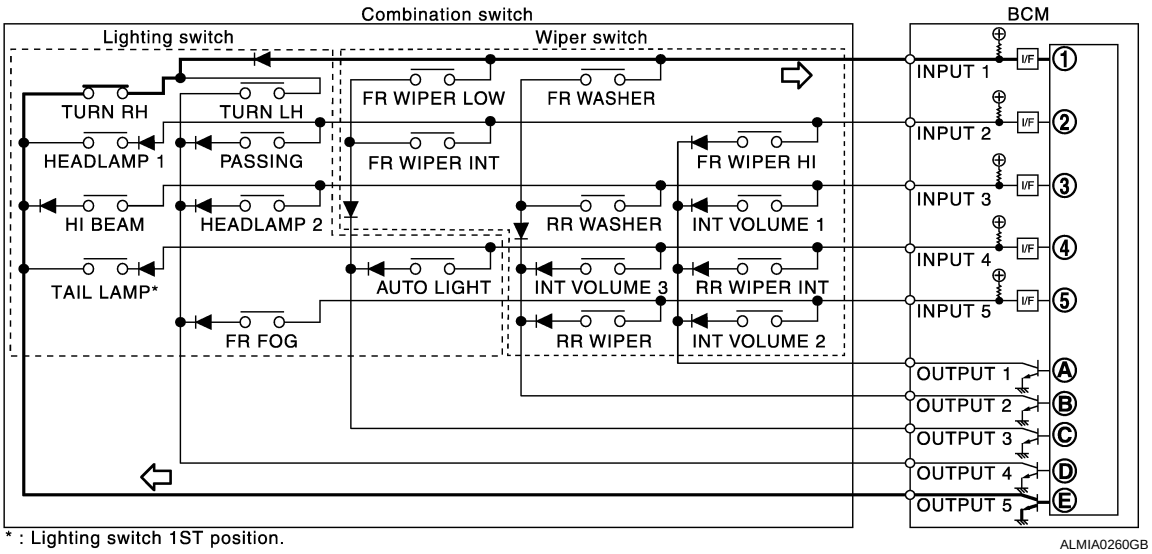

- BCM detects the combination switch status signal “1E” when the signal of OUTPUT 5 is input to INPUT 1.
- BCM judges that the TURN RH switch is ON when the signal “1E” is detected.

Example 2: When some switches (turn RH switch, front wiper LO switch) are turned ON

- The circuits between INPUT 1 and OUTPUT 5 and between INPUT 1 and OUTPUT 3 are formed when the TURN RH switch and FR WIPER LOW switch are turned ON.

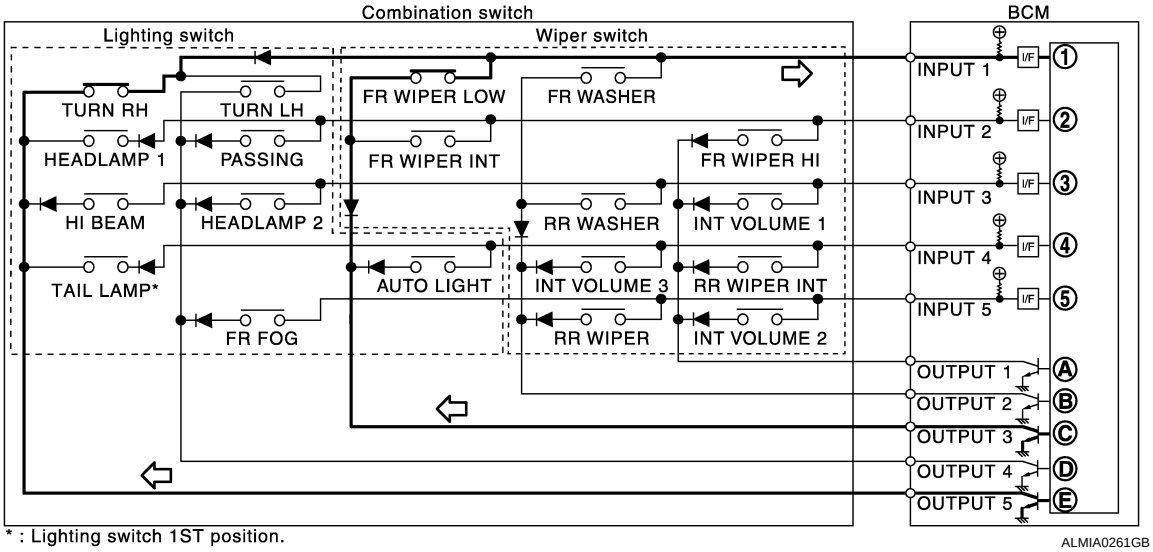

- BCM detects the combination switch status signal “1CE” when the signals of OUTPUT 3 and OUTPUT 5 are input to INPUT 1.
- BCM judges that the TURN RH switch and FR WIPER LOW switch are ON when the signal “1CE” is detected.

WIPER INTERMITTENT DIAL POSITION SETTING (FRONT WIPER INTERMITTENT OPERATION)

BCM judges the wiper intermittent dial 1 - 7 by the status of INT VOLUME 1, 2 and 3 switches.

Wiper intermittent dial position	Intermittent operation delay interval	INT VOLUME switch ON/OFF status		
		INT VOLUME 1 switch	INT VOLUME 2 switch	INT VOLUME 3 switch
1	Short ↑	ON	ON	ON
2		ON	ON	OFF
3		ON	OFF	OFF
4		OFF	OFF	OFF
5		OFF	OFF	ON
6	↓ Long	OFF	ON	ON
7		OFF	ON	OFF

Component Parts Location

INFOID:0000000001712656

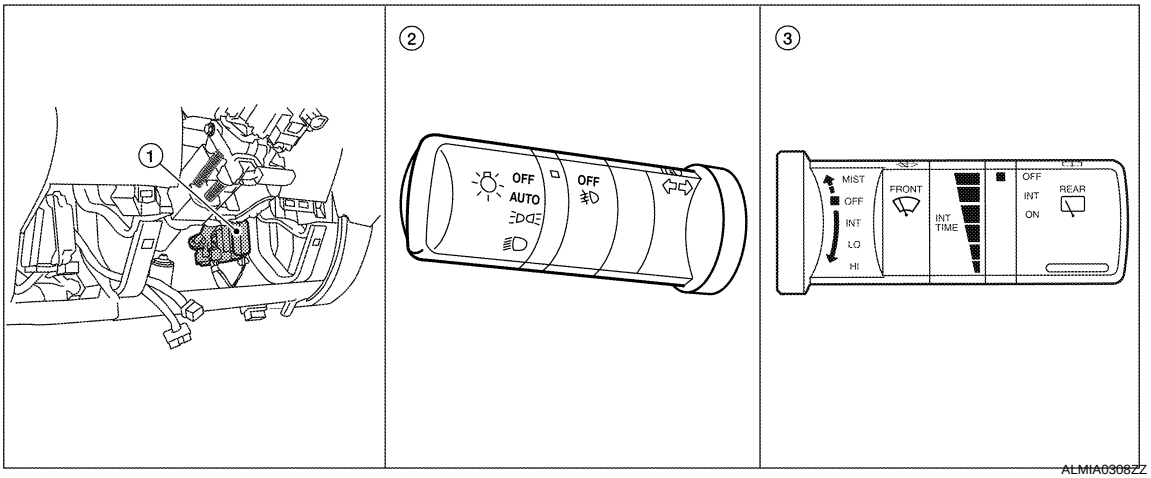

1. BCM M18, M19, M20 (view with instrument panel removed)
2. Combination switch (lighting and turn signal switch) M28
3. Combination switch (wiper and washer switch) M28

SIGNAL BUFFER SYSTEM

System Diagram

INFOID:0000000001712657

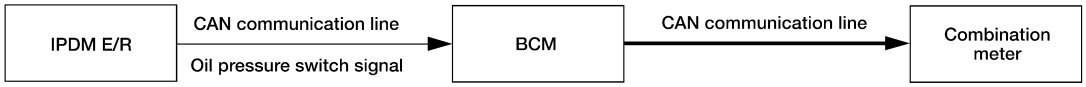

ALMIA0263GB

System Description

INFOID:0000000001712658

OUTLINE

BCM has the signal transmission function that outputs/transmits each input/received signal to each unit.

Signal transmission function list

Signal name	Input	Output	Description
Oil pressure switch signal	IPDM E/R (CAN)	Combination meter (CAN)	Transmits the received oil pressure switch signal via CAN communication.

POWER CONSUMPTION CONTROL SYSTEM

System Diagram

INFOID:0000000001712659

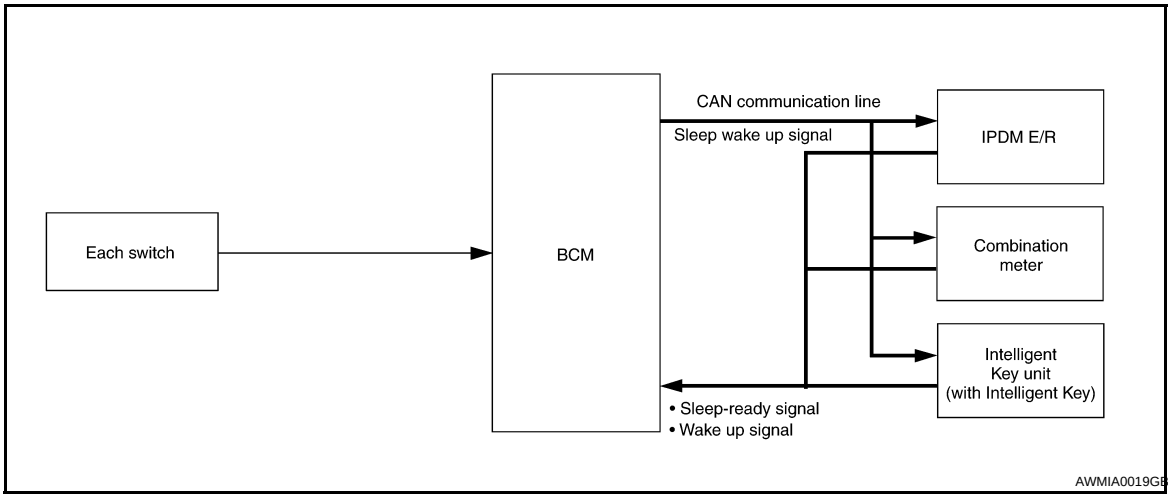

System Description

INFOID:0000000001712660

OUTLINE

- BCM incorporates a power consumption control function that reduces the power consumption according to the vehicle status.
- BCM switches the status (control mode) by itself with the power saving control function. It performs the sleep request to each unit [IPDM E/R, combination meter and Intelligent Key unit (with Intelligent Key)] that operates with the ignition switch OFF.

Normal mode (wake-up)
- CAN communication is normally performed with other units
- Each control with BCM is operating properly

CAN communication sleep mode (CAN sleep)
- CAN transmission is stopped
- Control with BCM only is operating

Low power consumption mode (BCM sleep)
- Low power consumption control is active
- CAN transmission is stopped

LOW POWER CONSUMPTION CONTROL WITH BCM

BCM reduces the power consumption with the following operation in the low power consumption mode.
- The reading interval of the each switches changes from 10 ms interval to 20 ms interval.

Sleep mode activation

- BCM receives the sleep-ready signal (ready) from IPDM E/R, combination meter and Intelligent Key unit (with Intelligent Key) via CAN communication.
- BCM transmits the sleep wake up signal (sleep) to each unit when all of the CAN sleep conditions are fulfilled.
- Each unit stops the transmission of CAN communication with the sleep wake up signal. BCM is in CAN communication sleep mode.
- BCM is in the low power consumption mode and perform the low power consumption control when all of the BCM sleep conditions are fulfilled with CAN sleep condition.

Sleep condition

CAN sleep condition	BCM sleep condition
• Receiving the sleep-ready signal (ready) from all units • Ignition switch: OFF • Vehicle security system alarm: No operation • Warning lamp: No operation • Warning chime: No operation • Stop lamp switch: OFF • Key switch status: No change for 2 seconds • Hazard warning lamp: No operation • Exterior lamp: OFF • Door lock status: No change for 2 seconds • CONSULT-III communication status: No communication • Door switch status: No change for 2 seconds	The controls only BCM are completed. (Interior room lamp battery saver: Time out etc.)

Wake-up operation

- BCM transmits sleep wake up signal (wake up) to each unit when any condition listed below is established, and then goes into normal mode from low power consumption mode.
- Each unit starts transmissions with CAN communication by receiving sleep wake up signals. Each unit transmits wake up signals to BCM with CAN communication to convey the start of CAN communication.

Wake-up condition

BCM wake-up condition
• Ignition switch: OFF → ACC or ON • Stop lamp switch: ON (Depress brake pedal) • Any door switch: OFF → ON • Lighting switch: OFF → 1ST or PASS • Hazard switch: OFF → ON • Back door opener switch OFF → ON • Remote keyless entry receiver: Receiving (with remote keyless entry) • Intelligent Key unit: Receiving (with Intelligent Key)

Component Parts Location

INFOID:0000000001712661

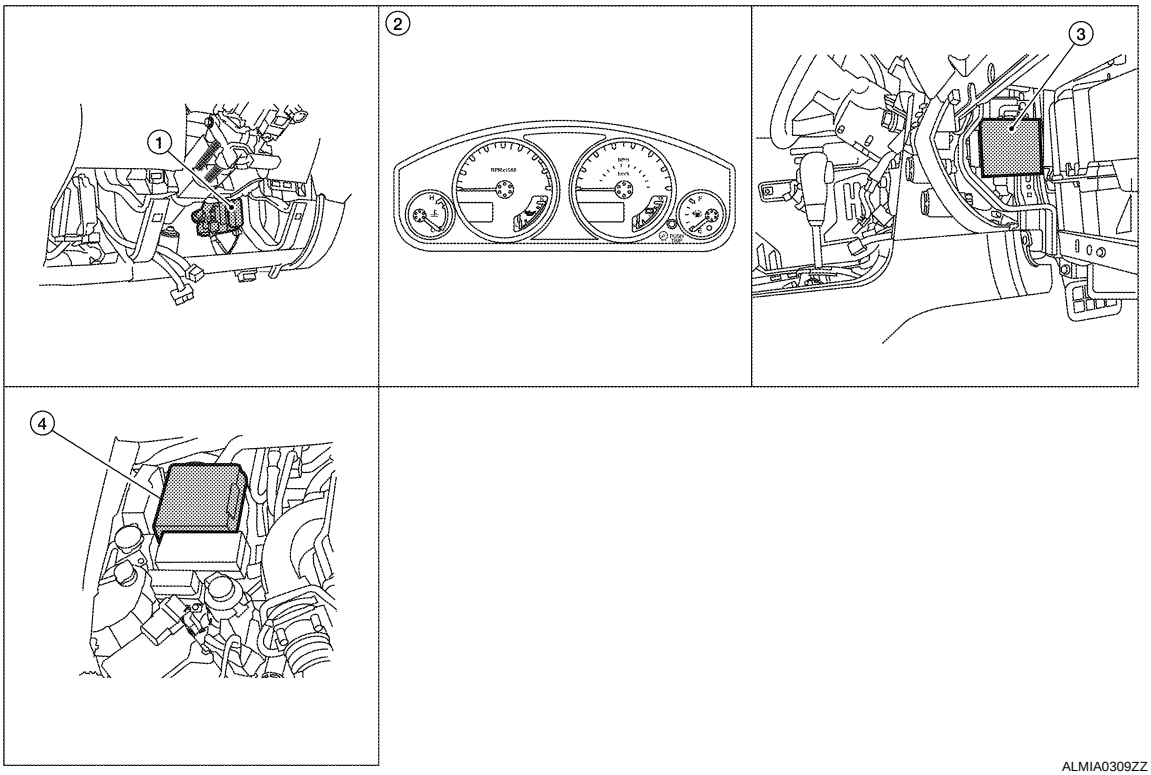

ALMIA0309ZZ

1. BCM M18, M19, M20 (view with instrument lower panel LH removed)
2. Combination meter M24
3. Intelligent Key unit M70 (with Intelligent Key) (view with glove box removed)
4. IPDM E/R

DIAGNOSIS SYSTEM (BCM)

COMMON ITEM

COMMON ITEM : CONSULT-III Function (BCM - COMMON ITEM)

INFOID:0000000001712662

APPLICATION ITEM

CONSULT-III performs the following functions via CAN communication with BCM.

Diagnosis mode	Function Description
WORK SUPPORT	Changes the setting for each system function.
SELF-DIAG RESULTS	Displays the diagnosis results judged by BCM. Refer to BCS-51, "DTC Index".
CAN DIAG SUPPORT MNTR	Monitors the reception status of CAN communication viewed from BCM.
DATA MONITOR	The BCM input/output signals are displayed.
ACTIVE TEST	The signals used to activate each device are forcibly supplied from BCM.
ECU IDENTIFICATION	The BCM part number is displayed.
CONFIGURATION	• Enables to read and save the vehicle specification. • Enables to write the vehicle specification when replacing BCM.

SYSTEM APPLICATION

BCM can perform the following functions for each system.

NOTE:

It can perform the diagnosis modes except the following for all sub system selection items.

System	Sub system selection item	Diagnosis mode		
		WORK SUPPORT	DATA MONITOR	ACTIVE TEST
BCM	BCM	×		
Door lock	DOOR LOCK	×	×	×
Rear window defogger	REAR DEFOGGER		×	
Warning chime	BUZZER		×	×
Interior room lamp timer	INT LAMP	×	×	×
Remote keyless entry system[1]	MULTI REMOTE ENT	×	×	×
Exterior lamp	HEAD LAMP	×	×	×
Wiper and washer	WIPER	×	×	×
Turn signal and hazard warning lamps	FLASHER		×	×
Air conditioner	AIR CONDITONER		×	
Intelligent Key system[2]	INTELLIGENT KEY		×	
Combination switch	COMB SW		×	
Immobilizer	IMMU		×	×
Interior room lamp battery saver	BATTERY SAVER	×	×	×
Back door open	TRUNK		×	×
RAP (retained accessory power)	RETAINED PWR	×	×	×
Signal buffer system	SIGNAL BUFFER		×	×
TPMS (tire pressure monitoring system)	AIR PRESSURE MONITOR	×	×	×
Vehicle security system	PANIC ALARM			×

1: With remote keyless entry system

2: With Intelligent Key

BCM

BCM : CONSULT-III Function (BCM - BCM)

INFOID:0000000001712663

WORK SUPPORT

Item	Description
RESET SETTING VALUE	Return a value set with WORK SUPPORT of each system to a default value in factory shipment.

DOOR LOCK

DOOR LOCK : CONSULT-III Function (BCM - DOOR LOCK)

INFOID:0000000001712664

WORK SUPPORT

Work Item	Description
DOOR LOCK-UNLOCK SET	• ON • OFF
ANTI-LOCK OUT SET	• ON • OFF

DATA MONITOR

Monitor Item [Unit}	Description
IGN ON SW [ON/OFF]	Indicates condition of ignition switch in ON position
KEY ON SW [ON/OFF]	Indicates condition of key switch
CDL LOCK SW [ON/OFF]	Indicates condition of door lock and unlock switch
CDL UNLOCK SW [ON/OFF]	Indicates condition of door lock and unlock switch
DOOR SW-DR [ON/OFF]	Indicates condition of front door switch LH
DOOR SW-AS [ON/OFF]	Indicates condition of front door switch RH
DOOR SW-RR [ON/OFF]	Indicates condition of rear door switch RH
DOOR SW-RL [ON/OFF]	Indicates condition of rear door switch LH
BACK DOOR SW [ON/OFF]	Indicates condition of back door switch
KEY CYL LK-SW [ON/OFF]	Indicates condition of lock signal from door key cylinder switch
KEY CYL UN-SW [ON/OFF]	Indicates condition of unlock signal from door key cylinder switch
KEYLESS LOCK[1] [ON/OFF]	Indicates condition of lock signal from keyfob
KEYLESS UNLOCK[1] [ON/OFF]	Indicates condition of unlock signal from keyfob
I-KEY LOCK[2] [ON/OFF]	Indicates condition of lock signal from Intelligent Key
I-KEY UNLOCK[2] [ON/OFF]	Indicates condition of unlock signal from Intelligent Key

1: With remote keyless entry system
2: With Intelligent Key

ACTIVE TEST

Test Item	Description
DOOR LOCK	This test is able to check door lock operation [ALL LOCK/ALL UNLOCK/DR UNLOCK/ OTHER UNLOCK].
TRUNK/BACK DOOR	This test is able to check trunk/back door lock operation [LOCK (SET)/UNLOCK (RE-LEASE)].

REAR WINDOW DEFOGGER

REAR WINDOW DEFOGGER : CONSULT-III Function (BCM - REAR DEFOGGER)

INFOID:0000000001712665

DATA MONITOR

Monitor Item [Unit]	Description
IGN ON SW [ON/OFF]	Indicates condition of ignition switch in ON position
IGN ACC SW [ON/OFF]	Indicates condition of ignition switch in ACC position
REAR DEF SW [ON/OFF]	Displays “Press (ON)/other (OFF)” status determined with the rear window defogger switch

BUZZER

BUZZER : CONSULT-III Function (BCM - BUZZER)

INFOID:0000000001712666

DATA MONITOR

Monitor Item [Unit]	Description
IGN ON SW [ON/OFF]	Ignition switch (ON) status judged by ignition power supply input
KEY ON SW [ON/OFF]	Key switch status
DOOR SW -DR [ON/OFF]	Front door switch (driver side) status judged by BCM
LIGHT SW 1ST [ON/OFF]	Lighting switch status judged by the lighting switch signal read with combination switch reading function
BUCKLE SW [ON/OFF]	Seat belt buckle switch status

ACTIVE TEST

Test Item	Description
LIGHT WARN ALM	The light reminder warning operation can be checked by operating the relevant function (On/Off).
IGN KEY WARN ALM	The key reminder warning operation can be checked by operating the relevant function (On/Off).
SEAT BELT WARN TEST	The seat belt warning operation can be checked by operating the relevant function (On/Off).
DOOR WARNING IND	The door open warning operation can be checked by operating the relevant function (On/Off).

INT LAMP

INT LAMP : CONSULT-III Function (BCM - INT LAMP)

INFOID:0000000001712667

WORK SUPPORT

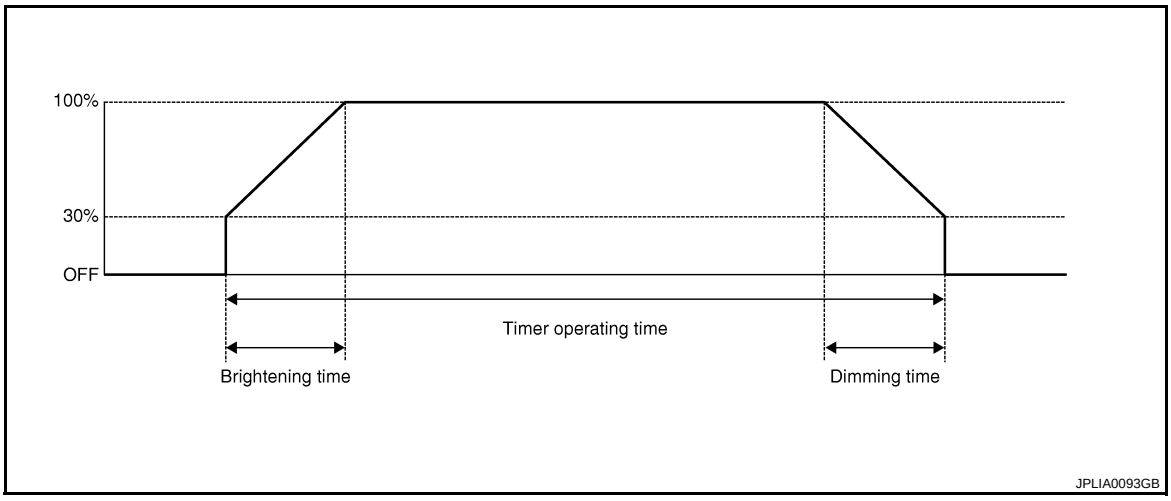

Work Item	Setting item	Setting	
SET I/L D-UNLCK INTCON	ON*	With the interior room lamp timer function	
	OFF	Without the interior room lamp timer function	
ROOM LAMP ON TIME SET	MODE 1	0.5 sec.	Sets the interior room lamp gradual brightening time.
	MODE 2*	1 sec.	
	MODE 3	2 sec.	
	MODE 4	3 sec.	
	MODE 5	0 sec.	
ROOM LAMP OFF TIME SET	MODE 1	0.5 sec.	Sets the interior room lamp gradual dimming time.
	MODE 2	1 sec.	
	MODE 3	2 sec.	
	MODE 4*	3 sec.	
	MODE 5	0 sec.	

* : Initial setting

DATA MONITOR

Monitor Item [Unit]	Description
IGN ON SW [ON/OFF]	Ignition switch (ON) status judges from IGN signal (ignition power supply)
KEY ON SW [ON/OFF]	The switch status input from key switch
DOOR SW-DR [ON/OFF]	The switch status input from front door switch LH
DOOR SW-AS [ON/OFF]	The switch status input from front door switch RH
DOOR SW-RR [ON/OFF]	The switch status input from rear door switch RH
DOOR SW- RL [ON/OFF]	The switch status input from rear door switch LH
BACK DOOR SW [ON/OFF]	The switch status input from back door switch
KEY CYL LK-SW [ON/OFF]	Lock switch status input from door lock and unlock switch
KEY CYL UN-SW [ON/OFF]	Lock switch status input from door lock and unlock switch
CDL LOCK SW [ON/OFF]	Lock switch status input from door lock and unlock switch
CDL UNLOCK SW [ON/OFF]	Unlock switch status input from door lock and unlock switch
KEYLESS LOCK[1] [ON/OFF]	Lock signal status received from remote keyless entry receiver (integrated in the BCM)
KEYLESS UNLOCK[1] [ON/OFF]	Unlock signal status received from remote keyless entry receiver (integrated in the BCM)
I-KEY LOCK[2] [ON/OFF]	Lock signal status received from Intelligent Key unit by CAN communication
I-KEY UNLOCK[2] [ON/OFF]	Unlock signal status received from Intelligent Key unit by CAN communication

1: With remote keyless entry

2: With Intelligent Key

ACTIVE TEST

Test Item	Operation	Description
INT LAMP	ON	Outputs the interior room lamp control signal to turn the interior room lamps ON.
	OFF	Stops the interior room lamp control signal to turn the interior room lamps OFF.
IGN ILLUM	ON	Outputs the ignition keyhole illumination control signal to turn the ignition keyhole illumination lamp ON.
	OFF	Stops the ignition keyhole illumination control signal to turn the ignition keyhole illumination lamp OFF.

Test Item	Operation	Description
STEP LAMP TEST	ON	Outputs the step lamp control signal to turn the step lamps ON.
	OFF	Stops the step lamp control signal to turn the step lamps OFF.
LUGGAGE LAMP TEST	ON	Outputs the luggage lamp control signal to turn the luggage lamp ON.
	OFF	Stops the luggage lamp control signal to turn the luggage lamp OFF.

MULTIREMOTE ENT

MULTIREMOTE ENT : CONSULT-III Function (BCM - MULTIREMOTE ENT)

INFOID:0000000001712668

WORK SUPPORT

Work Item	Description
HAZARD LAMP SET	Answer back function (hazard) mode can be changed in this mode. For the detail of the setting, refer to BCS-22, "FLASHER : CONSULT-III Function (BCM - FLASHER)".

DATA MONITOR

Monitor Item [Unit}	Condition
IGN ON SW [ON/OFF]	Indicates condition of ignition switch in ON position
KEY SW [ON/OFF]	Indicates condition of key switch
KEYLESS LOCK [ON/OFF]	Indicates condition of lock signal from keyfob
KEYLESS UNLOCK [ON/OFF]	Indicates condition of unlock signal from keyfob
DOOR SW-DR [ON/OFF]	Indicates condition of front door switch LH
DOOR SW-AS [ON/OFF]	Indicates condition of front door switch RH
DOOR SW-RR [ON/OFF]	Indicates condition of rear door switch RH
DOOR SW-RL [ON/OFF]	Indicates condition of rear door switch LH
BACK DOOR SW [ON/OFF]	Indicates condition of back door switch
CDL LOCK SW [ON/OFF]	Indicates condition of door lock and unlock switch
CDL UNLOCK SW [ON/OFF]	Indicates condition of door lock and unlock switch
RKE LOCK AND UNLOCK	This item is indicated, but not monitored

ACTIVE TEST

Test Item	Description
DOOR LOCK	This test is able to check warning chime in combination meter operation. [ALL LOCK/ALL UN-LOCK/DR UNLOCK/OTHER UNLOCK]
INT LAMP	This test is able to check interior lamp operation [ON/OFF].
FLASHER	This test is able to check flasher operation [LH/RH/OFF].

HEADLAMP

HEADLAMP : CONSULT-III Function (BCM - HEAD LAMP)

INFOID:0000000001712669

WORK SUPPORT

Work Item	Setting item	Setting
BATTERY SAVER SET	ON*	With the exterior lamp battery saver function
	OFF	Without the exterior lamp battery saver function

Work Item	Setting item	Setting	
CUSTOM A/LIGHT SETTING	MODE1*	Normal	
	MODE2	More sensitive setting than normal setting (Turns ON earlier than normal operation.)	
	MODE3	More sensitive setting than MODE 2 (Turns ON earlier than MODE 2.)	
	MODE4	Less sensitive setting than normal setting (Turns ON later than normal operation.)	
ILL DELAY SET	MODE1*	45 sec.	Sets delay timer function timer operation time (All doors closed)
	MODE2	Without the function	
	MODE3	30 sec.	
	MODE4	60 sec.	
	MODE5	90 sec.	
	MODE6	120 sec.	
	MODE7	150 sec.	
	MODE8	180 sec.	

*: Initial setting

DATA MONITOR

Monitor Item [Unit]	Description
IGN ON SW [ON/OFF]	Ignition switch (ON) status judged from IGN signal (ignition power supply)
HI BEAM SW [ON/OFF]	Each switch status that BCM judges from the combination switch reading function
H/L SW POS [ON/OFF]	
LIGHT SW 1ST [ON/OFF]	
PASSING SW [ON/OFF]	
AUTO LIGHT SW [ON/OFF]	
FR FOG SW [ON/OFF]	
DOOR SW-DR [ON/OFF]	The switch status input from front door switch LH
AUT LIGHT SYS [ON/OFF]	Auto light system status that BCM judges from the vehicle condition

ACTIVE TEST

Test Item	Operation	Description
TAIL LAMP	ON	Transmits the position light request signal to IPDM E/R with CAN communication to turn the tail lamp ON.
	OFF	Stops the tail lamp request signal transmission.
HEAD LAMP	HI	Transmits the high beam request signal with CAN communication to turn the headlamp (HI).
	LO	Transmits the low beam request signal with CAN communication to turn the headlamp (LO).
	OFF	Stops the high & low beam request signal transmission.
FR FOG LAMP	ON	Transmits the front fog lights request signal to IPDM E/R with CAN communication to turn the front fog lamp ON.
	OFF	Stops the front fog lights request signal transmission.
DAYTIME RUNNING LIGHT	ON	Transmits the day time running light request signal to IPDM E/R with CAN communication to turn the each lamps ON.
	OFF	Stops the day time running light request signal transmission.

WIPER

WIPER : CONSULT-III Function (BCM - WIPER)

INFOID:0000000001712670

WORK SUPPORT

Work Item	Setting Item	Description
WIPER SPEED SETTING	ON*	With vehicle speed (Front wiper intermittent time linked with the vehicle speed and wiper intermittent dial position)
	OFF	Without vehicle speed (Front wiper intermittent time linked with the wiper intermittent dial position)

*: Factory setting

DATA MONITOR

Monitor Item [Unit]	Description
IGN ON SW [ON/OFF]	Ignition switch ON status judged from ignition power supply
FR WIPER HI [ON/OFF]	Each switch status that BCM judges from the combination switch reading function
FR WIPER LOW [ON/OFF]	
FR WIPER INT [ON/OFF]	
FR WASHER SW [ON/OFF]	
INT VOLUME [1 - 7]	Each switch status that BCM judges from the combination switch reading function
FR WIPER STOP [ON/OFF]	Front wiper motor (stop position) status received from IPDM E/R with CAN communication
VEHICLE SPEED [km/h]	The value of the vehicle speed signal received from combination meter with CAN communication
RR WIPER ON [ON/OFF]	Each switch status that BCM judges from the combination switch reading function
RR WIPER INT [ON/OFF]	
RR WASHER SW [ON/OFF]	
RR WIPER STOP [ON/OFF]	Rear wiper motor (stop position) status input from the rear wiper motor

ACTIVE TEST

Test Item	Operation	Description
FR WIPER	HI	Transmits the front wiper request signal (HI) to IPDM E/R with CAN communication to operate the front wiper HI operation.
	LO	Transmits the front wiper request signal (LO) to IPDM E/R with CAN communication to operate the front wiper LO operation.
	INT	Transmits the front wiper request signal (INT) to IPDM E/R with CAN communication to operate the front wiper INT operation.
	OFF	Stops transmitting the front wiper request signal to stop the front wiper operation.
RISE UP WIPER TEST	ON	Outputs the voltage to operate the rear wiper motor.
	OFF	Stops the voltage to stop.

FLASHER

FLASHER : CONSULT-III Function (BCM - FLASHER)

INFOID:0000000001712671

DATA MONITOR

Monitor Item [Unit]	Description
IGN ON SW [ON/OFF]	Ignition switch (ON) status judged from IGN signal (ignition power supply)
HAZARD SW [ON/OFF]	The switch status input from the hazard switch
TURN SIGNAL R [ON/OFF]	Each switch condition that BCM judges from the combination switch reading function
TURN SIGNAL L [ON/OFF]	
BRAKE SW [ON/OFF]	The switch status input from the brake switch

ACTIVE TEST

Test Item	Operation	Description
FLASHER	RH	Outputs the voltage to turn the right side turn signal lamps ON.
	LH	Outputs the voltage to turn the left side turn signal lamps ON.
	OFF	Stops the voltage to turn the turn signal lamps OFF.

AIR CONDITIONER

AIR CONDITIONER : CONSULT-III Function (BCM - AUTO AIR CONDITIONER)

INFOID:0000000001712672

DATA MONITOR

Monitor Item [Unit]	Contents
IGN ON SW [ON/OFF]	Display [ignition switch position (On)/(Off), ACC position (Off)] status as judged from ignition switch signal
FAN ON SIG [ON/OFF]	Display [FAN (On)/FAN (Off)] status as judged form blower fan motor switch signal
AIR COND SW [ON/OFF]	Display [COMP (On)/COMP (Off)] status as judged form air conditioner switch signal

INTELLIGENT KEY

INTELLIGENT KEY : CONSULT-III Function (BCM - INTELLIGENT KEY)

INFOID:0000000001712673

DATA MONITOR

Monitor Item [Unit]	Condition
PUSH SW [ON/OFF]	Indicates condition of ignition knob switch
I-KEY LOCK [ON/OFF]	Indicates condition of lock signal from Intelligent Key
I-KEY UNLOCK [ON/OFF]	Indicates [condition of unlock signal from Intelligent Key
I-KEY PW DWN [ON/OFF]	Indicates condition of all power window signal from Intelligent Key
I-KEY TRUNK [ON/OFF]	Indicates condition of trunk open signal from Intelligent Key
I-KEY PANIC [ON/OFF]	Indicates condition of panic signal from Intelligent Key

COMB SW

COMB SW : CONSULT-III Function (BCM - COMB SW)

INFOID:0000000001712674

DATA MONITOR

Monitor Item [Unit]	Description
TURN SIGNAL R [OFF/ON]	Displays the status of the TURN RH switch in combination switch judged by BCM with the combination switch reading function
TURN SIGNAL L [OFF/ON]	Displays the status of the TURN LH switch in combination switch judged by BCM with the combination switch reading function
HI BEAM SW [OFF/ON]	Displays the status of the HI BEAM switch in combination switch judged by BCM with the combination switch reading function
HEADLAMP SW1 [OFF/ON]	Displays the status of the HEADLAMP switch in combination switch judged by BCM with the combination switch reading function
HEADLAMP SW2 [OFF/ON]	Displays the status of the HEADLAMP switch in combination switch judged by BCM with the combination switch reading function
LIGHT SW 1ST [OFF/ON]	Displays the status of the HEADLAMP switch in combination switch judged by BCM with the combination switch reading function
PASSING SW [OFF/ON]	Displays the status of the PASSING switch in combination switch judged by BCM with the combination switch reading function
AUTO LIGHT SW [OFF/ON]	Displays the status of the AUTO LIGHT switch in combination switch judged by BCM with the combination switch reading function
FR FOG SW [OFF/ON]	Displays the status of the FR FOG switch in combination switch judged by BCM with the combination switch reading function
FR WIPER HI [OFF/ON]	Displays the status of the FR WIPER HI switch in combination switch judged by BCM with the combination switch reading function
FR WIPER LOW [OFF/ON]	Displays the status of the FR WIPER LOW switch in combination switch judged by BCM with the combination switch reading function
FR WIPER INT [OFF/ON]	Displays the status of the FR WIPER INT switch in combination switch judged by BCM with the combination switch reading function
FR WASHER SW [OFF/ON]	Displays the status of the FR WASHER switch in combination switch judged by BCM with the combination switch reading function
INT VOLUME [1 - 7]	Displays the status of wiper intermittent dial position judged by BCM with the combination switch reading function
RR WIPER ON [OFF/ON]	Displays the status of the RR WIPER switch in combination switch judged by BCM with the combination switch reading function
RR WIPER INT [OFF/ON]	Displays the status of the RR WIPER INT switch in combination switch judged by BCM with the combination switch reading function
RR WASHER SW [OFF/ON]	Displays the status of the RR WASHER switch in combination switch judged by BCM with the combination switch reading function

IMMU

IMMU : CONSULT-III Function (BCM - IMMU)

INFOID:0000000001712675

DATA MONITOR

Monitor Item [Unit]	Description
IGN ON SW [ON/OFF]	Indicates condition of ignition switch in ON position.

ACTIVE TEST

Test Item	Description
THEFT IND	This test is able to check security indicator operation [ON/OFF].

BATTERY SAVER

BATTERY SAVER : CONSULT-III Function (BCM - BATTERY SAVER)

INFOID:0000000001712676

WORK SUPPORT

Work Item	Setting Item	Setting	
ROOM LAMP TIMER SET	MODE 1*	15 min.	Sets the interior room lamp battery saver timer operating time.
	MODE 2	30 min.	

*: Initial setting

DATA MONITOR

Monitor Item [Unit]	Description
IGN ON SW [ON/OFF]	Ignition switch (ON) status judges from IGN signal (ignition power supply)
KEY ON SW [ON/OFF]	The switch status input from key switch
DOOR SW-DR [ON/OFF]	The switch status input from front door switch (driver side)
DOOR SW-AS [ON/OFF]	The switch status input from front door switch (passenger side)
DOOR SW-RR [ON/OFF]	The switch status input from rear door switch RH
DOOR SW- RL [ON/OFF]	The switch status input from rear door switch LH
BACK DOOR SW [ON/OFF]	The switch status input from back door switch
KEY CYL LK-SW [ON/OFF]	Lock switch status input from door key cylinder switch
KEY CYL UN-SW [ON/OFF]	Unlock switch status input from door key cylinder switch
CDL LOCK SW [ON/OFF]	Lock switch status input from door lock and unlock switch
CDL UNLOCK SW [ON/OFF]	Unlock switch status input from door lock and unlock switch
I-KEY LOCK[1] [ON/OFF]	Lock signal status received from Intelligent Key unit by CAN communication
I-KEY UNLOCK[1] [ON/OFF]	Unlock signal status received from Intelligent Key unit by CAN communication
KEYLESS LOCK[2] [ON/OFF]	Lock signal status received from remote keyless entry receiver (integrated in the BCM)
KEYLESS UNLOCK[2] [ON/OFF]	Unlock signal status received from remote keyless entry receiver (integrated in the BCM)

1: With Intelligent Key
2: With remote keyless entry

ACTIVE TEST

Test Item	Operation	Description
BATTERY SAVER	OFF	Cuts the interior room lamp power supply to turn interior room lamps OFF.
	ON	Outputs the interior room lamp power supply to turn interior room lamps ON.*

*: Each lamp switch is in ON position.

TRUNK

TRUNK : CONSULT-III Function (BCM - TRUNK)

INFOID:0000000001712677

DATA MONITOR

Monitor Item [Unit]	Contents
IGN ON SW [ON/OFF]	Indicates condition of ignition switch in ON position
I-KEY TRUNK [ON/OFF]	Indicates condition of Intelligent Key back door opening operation
TRUNK OPNR SW [ON/OFF]	Indicates condition of back door opener switch.
VEHICLE SPEED [ON/OFF]	Indicates condition of vehicle speed signal from combination meter

ACTIVE TEST

Test Item	Description
TRUNK/BACK DOOR	This test is able to check back door open operation. Back door open when “OPEN” on CONSULT-III screen is touched.

RETAINED PWR

RETAINED PWR : CONSULT-III Function (BCM - RETAINED PWR)

INFOID:0000000001712678

Data monitor

Monitor Item [Unit]	Description
DOOR SW-DR [ON/OFF]	Indicates condition of front door switch LH.
DOOR SW-AS [ON/OFF]	Indicates condition of front door switch RH.

SIGNAL BUFFER

SIGNAL BUFFER : CONSULT-III Function (BCM - SIGNAL BUFFER)

INFOID:0000000001712679

DATA MONITOR

Monitor Item [Unit]	Description
OIL PRESS SW [ON/OFF]	Displays the status of oil pressure switch received from IPDM E/R via CAN communication.

ACTIVE TEST

Test Item	Operation	Description
OIL PRESSURE SW	OFF	OFF
	ON	BCM transmits the oil pressure switch signal to the combination meter via CAN communication, which operates the oil pressure gauge in the combination meter.

AIR PRESSURE MONITOR

AIR PRESSURE MONITOR : Diagnosis Description

INFOID:0000000001712680

DESCRIPTION

During driving, the TPMS receives the signal transmitted from the transmitter installed in each wheel, when the tire pressure becomes low. The control unit (BCM) of this system has pressure judgment and trouble diagnosis functions.
When the TPMS detects low inflation pressure or another unusual symptom, the warning lamps in the combination meter comes on.

SELF DIAGNOSTIC PROCEDURE (WITH CONSULT-III)

With CONSULT-III

- Touch “SELF-DIAG RESULTS” display to show malfunction experienced since the last erasing operation. Refer to BCS-51, "DTC Index".

SELF DIAGNOSTIC PROCEDURE (WITHOUT CONSULT-III)

Without CONSULT-III

To start the self-diagnostic results mode, ground terminal of the tire pressure warning check connector. The malfunction location is indicated by the warning lamp flashing.

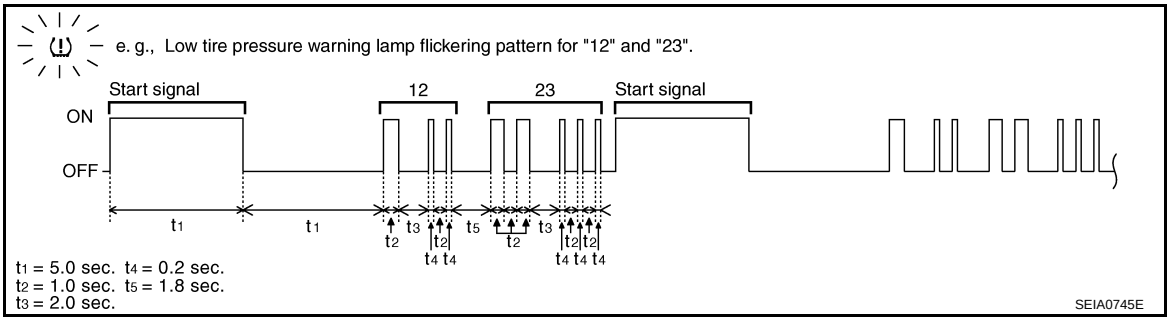

NOTE:
When the low tire warning lamp flashes 5 Hz and continues repeating it, the system is normal.

Flickering pattern	Items	Diagnostic items detected when···	Check item
15	Tire pressure value (Front LH)	Front LH tire pressure drops to 181 kPa (1.8 kg/cm, 25.25 psi) or less.	–
16	Tire pressure value (Front RH)	Front RH tire pressure drops to 181 kPa (1.8 kg/cm, 25.25 psi) or less.	
17	Tire pressure value (Rear RH)	Rear RH tire pressure drops to 181 kPa (1.8 kg/cm, 25.25 psi) or less.	
18	Tire pressure value (Rear LH)	Rear LH tire pressure drops to 181 kPa (1.8 kg/cm, 25.25 psi) or less.	
21	Transmitter no data (Front LH)	Data from front LH transmitter can not be received.	WT-22
22	Transmitter no data (Front RH)	Data from front RH transmitter can not be received.	
23	Transmitter no data (Rear RH)	Data from Rear RH transmitter can not be received.	
24	Transmitter no data (Rear LH)	Data from Rear LH transmitter can not be received.	
31	Transmitter checksum error (Front LH)	Checksum data from front LH transmitter is malfunctioning.	WT-22
32	Transmitter checksum error (Front RH)	Checksum data from front RH transmitter is malfunctioning.	
33	Transmitter checksum error (Rear RH)	Checksum data from rear RH transmitter is malfunctioning.	
34	Transmitter checksum error (Rear LH)	Checksum data from rear RH transmitter is malfunctioning.	
35	Transmitter pressure data error (Front LH)	Air pressure data from front LH transmitter is malfunction.	WT-22
36	Transmitter pressure data error (Front RH)	Air pressure data from front RH transmitter is malfunction.	
37	Transmitter pressure data error (Rear RH)	Air pressure data from rear RH transmitter is malfunction.	
38	Transmitter pressure data error (Rear LH)	Air pressure data from rear LH transmitter is malfunction.	
41	Transmitter function code error (Front LH)	Function code data from front LH transmitter is malfunction.	WT-22
42	Transmitter function code error (Front RH)	Function code data from front RH transmitter is malfunction.	
43	Transmitter function code error (Rear RH)	Function code data from rear RH transmitter is malfunction.	
44	Transmitter function code error (Rear LH)	Function code data from rear LH transmitter is malfunction.	

Flickering pattern	Items	Diagnostic items detected when···	Check item
45	Transmitter battery voltage low (Front LH)	Battery voltage of front LH transmitter drops.	WT-22
46	Transmitter battery voltage low (Front RH)	Battery voltage of front RH transmitter drops.	
47	Transmitter battery voltage low (Rear RH)	Battery voltage of rear RH transmitter drops.	
48	Transmitter battery voltage low (Rear LH)	Battery voltage of rear LH transmitter drops.	
52	Vehicle speed signal error	Speed signal is not detected.	WT-22
No flickering	Tire pressure warning check switch	Tire pressure warning switch circuit is open.	–

ERASE SELF-DIAGNOSIS

With CONSULT-III
1. Perform applicable inspection of malfunctioning item and then repair or replace.
2. Turn ignition switch “ON” and select “SELF-DIAG RESULTS” mode for “AIR PRESSURE MONITOR” with CONSULTIII.
3. Touch “ERASE” on CONSULT-III screen to erase memory.

Without CONSULT-III
- In order to make it easier to find the cause of hard-to-duplicate malfunctions, malfunction information is stored into the control unit as necessary during use by the user. This memory is not erased no matter how many times the ignition switch is turned “ON” and“OFF”.
- However, this information is erased by turning ignition switch “OFF” after performing self-diagnostic or by erasing the memory using the CONSULT-III.

AIR PRESSURE MONITOR : CONSULT-III Function

INFOID:0000000001712681

WORK SUPPORT MODE

ID Read
The registered ID number is displayed.

ID Regist
Refer to WT-6, "ID Registration Procedure".

SELF-DIAG RESULTS MODE

Operation Procedure
Refer to WT-21, "Self-Diagnosis".

DATA MONITOR MODE

Screen of data monitor mode is displayed. Refer to WT-11, "CONSULT-III Function (BCM)".
NOTE:
When malfunction is detected, CONSULT-III perform REAL-TIME DIAGNOSIS.
Also, any malfunction detected while in this mode will be displayed at real time.

ACTIVE TEST MODE

NOTE:
Before performing the self-diagnosis, be sure to register the ID, or else the actual malfunction may be different from that displayed on CONSULT-III.

TEST ITEM LIST

Test item	Content
WARNING LAMP	This test is able to check to make sure that the warning lamp turns on.
ID REGIST WARNING	This test is able to check to make sure that the buzzer sounds or the warning lamp turns on.

Test item	Content
FLASHER	This test is able to check to make sure that each turn signal lamp turns on.
HORN	This test is able to check to make sure that the horn sounds.

THEFT ALM

THEFT ALM : CONSULT-III Function (BCM - THEFT ALM)

INFOID:0000000001712682

WORK SUPPORT

Work Item	Description
SECURITY ALARM SET	Vehicle security function mode can be changed in this mode. • ON: Vehicle security function is ON. • OFF: Vehicle security function is OFF.

COMPONENT DIAGNOSIS

U1000 CAN COMM CIRCUIT

Description

INFOID:0000000001712685

Refer to LAN-57, "CAN Communication Signal Chart".

DTC Logic

INFOID:0000000001712686

DTC DETECTION LOGIC

DTC	CONSULT-III display description	DTC Detection Condition	Possible cause
U1000	CAN COMM CIRCUIT	When BCM cannot communicate CAN communication signal continuously for 2 seconds or more.	Any item (or items) of the following listed below is malfunctioning in CAN communication system. • Transmission • Receiving (ECM) • Receiving (METER/M&A) • Receiving (TCM) • Receiving (MULTI AV) • Receiving (IPDM E/R) • Receiving (I-KEY)

Diagnosis Procedure

INFOID:0000000001712687

1. PERFORM SELF DIAGNOSTIC

1. Turn ignition switch ON and wait for 2 seconds or more.
2. Check “Self Diagnostic Result” of BCM.

Is “CAN COMM CIRCUIT” displayed?

YES >> Refer to LAN-14, "Trouble Diagnosis Flow Chart".
NO >> Refer to GI-51, "Intermittent Incident".

U1010 CONTROL UNIT (CAN)

DTC Logic

INFOID:0000000001712688

DTC DETECTION LOGIC

DTC	CONSULT-III display description	DTC Detection Condition	Possible cause
U1010	CONTROL UNIT (CAN)	When detecting error during the initial diagnosis of CAN controller of BCM.	BCM

Diagnosis Procedure

INFOID:0000000001712689

1. REPLACE BCM

When “DTC:U1010” is detected, replace BCM.

>> Replace BCM. Refer to BCS-54, "Removal and Installation".

Special Repair Requirement

INFOID:0000000001712690

1. ADDITIONAL SERVICE WHEN REPLACING BCM

>> Refer to BCS-3, "ADDITIONAL SERVICE WHEN REPLACING CONTROL UNIT : Special Repair Requirement".

POWER SUPPLY AND GROUND CIRCUIT

Diagnosis Procedure

INFOID:0000000001712691

1. CHECK FUSES AND FUSIBLE LINK

Check that the following fuses and fusible link are not blown.

Terminal No.	Signal name	Fuses and fusible link No.
57	Battery power supply	18 (10A)
70		G (50A)
11	Ignition ACC or ON	4 (10A)
38	Ignition ON or START	1 (10A)

Is the fuse blown?

YES >> Replace the blown fuse or fusible link after repairing the affected circuit.
NO >> GO TO 2

2. CHECK POWER SUPPLY CIRCUIT

1. Turn ignition switch OFF.
2. Disconnect BCM.
3. Check voltage between BCM harness connector and ground.

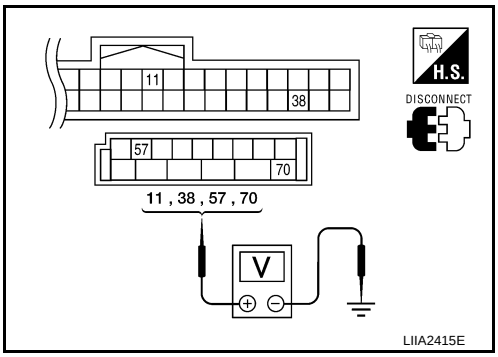

Connector	Terminals (+)	Terminals (-)	Power source	Condition	Voltage (V) (Approx.)
M18	11	Ground	ACC power supply	Ignition switch ACC or ON	Battery voltage
	38	Ground	Ignition power supply	Ignition switch ON or START	Battery voltage
M20	57	Ground	Battery power supply	Ignition switch OFF	Battery voltage
	70	Ground	Battery power supply	Ignition switch OFF	Battery voltage

Is the measurement value normal?

YES >> GO TO 3
NO >> Repair or replace harness.

3. CHECK GROUND CIRCUIT

Check continuity between BCM harness connector and ground.

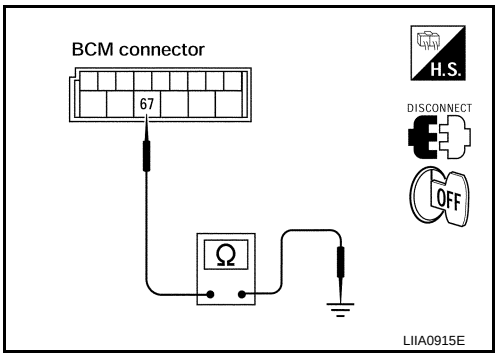

BCM Connector	BCM Terminal	Ground	Continuity
M20	67		Yes

Does continuity exist?

YES >> INSPECTION END
NO >> Repair or replace harness.

COMBINATION SWITCH INPUT CIRCUIT

Diagnosis Procedure

INFOID:0000000001712692

1. CHECK INPUT 1 - 5 SYSTEM CIRCUIT FOR OPEN

1. Turn ignition switch OFF.
2. Disconnect BCM and combination switch.
3. Check continuity between BCM harness connector and combination switch harness connector.

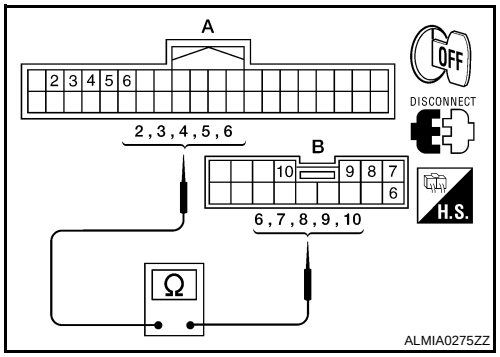

System	BCM		Combination switch		Continuity
	Connector	Terminal	Connector	Terminal	
INPUT 1	M18 (A)	6	M28 (B)	6	Yes
INPUT 2		5		7	
INPUT 3		4		10	
INPUT 4		3		9	
INPUT 5		2		8	

Does continuity exist?

YES >> GO TO 2
NO >> Repair or replace harness.

2. CHECK INPUT 1 - 5 SYSTEM CIRCUIT FOR SHORT

Check for continuity between BCM harness connector and ground.

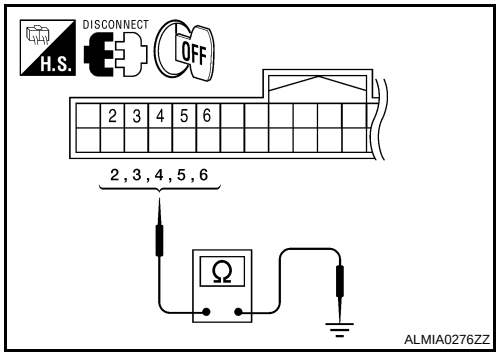

System	BCM		Ground	Continuity
	Connector	Terminal		
INPUT 1	M18	6	Ground	No
INPUT 2		5		
INPUT 3		4		
INPUT 4		3		
INPUT 5		2		

Does continuity exist?

YES >> Repair or replace harness.
NO >> GO TO 3

3. CHECK BCM OUTPUT VOLTAGE

1. Connect BCM.
2. Turn ignition switch ON.
3. Check voltage between BCM harness connector and ground.

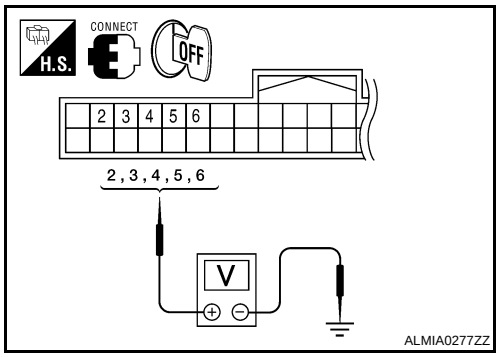

System	Terminals			Voltage (Approx.)
	(+)		(–)	
	BCM			
	Connector	Terminal		
INPUT 1	M18	6	Ground	Refer to BCS-38, "Reference Value".
INPUT 2		5		
INPUT 3		4		
INPUT 4		3		
INPUT 5		2		

Is the measurement value normal?

YES >> GO TO 4
NO >> Replace BCM. Refer to BCS-54, "Removal and Installation".

4. CHECK COMBINATION SWITCH

Check combination switch. Refer to BCS-36, "Description".

Is the check result normal?

YES >> Replace BCM. Refer to BCS-54, "Removal and Installation".
NO >> Replace the combination switch (applicable parts). Refer to EXL-116, "Removal and Installation".

Special Repair Requirement

INFOID:0000000001712693

1. ADDITIONAL SERVICE WHEN REPLACING BCM

>> Refer to BCS-3, "ADDITIONAL SERVICE WHEN REPLACING CONTROL UNIT : Special Repair Requirement".

COMBINATION SWITCH OUTPUT CIRCUIT

Diagnosis Procedure

INFOID:0000000001712694

1. CHECK OUTPUT 1 - 5 SYSTEM CIRCUIT FOR OPEN

1. Turn ignition switch OFF.
2. Disconnect BCM and combination switch.
3. Check continuity between BCM harness connector and combination switch harness connector.

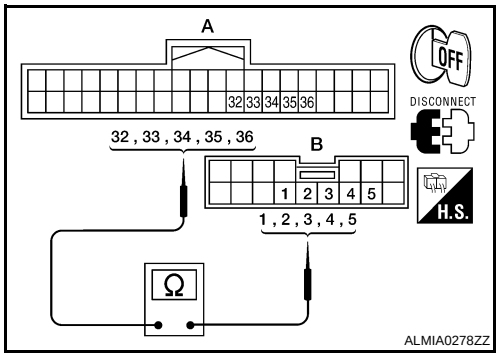

System	BCM		Combination switch		Continuity
	Connector	Terminal	Connector	Terminal	
OUTPUT 1	M18 (A)	36	M28 (B)	1	Yes
OUTPUT 2		35		2	
OUTPUT 3		34		3	
OUTPUT 4		33		4	
OUTPUT 5		32		5	

Does continuity exist?

YES >> GO TO 2
NO >> Repair or replace harness.

2. CHECK OUTPUT 1 - 5 SYSTEM CIRCUIT FOR SHORT

Check for continuity between BCM harness connector and ground.

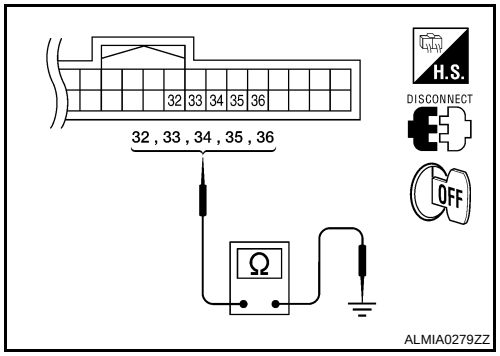

System	BCM			Continuity
	Connector	Terminal		
OUTPUT 1	M18	36	Ground	No
OUTPUT 2		35		
OUTPUT 3		34		
OUTPUT 4		33		
OUTPUT 5		32		

Does continuity exist?

YES >> Repair or replace harness.
NO >> GO TO 3

3. CHECK COMBINATION SWITCH

Check combination switch. Refer to BCS-36, "Description".

Is the check result normal?

YES >> Replace BCM. Refer to BCS-54, "Removal and Installation".
NO >> Replace combination switch (applicable parts). Refer to EXL-116, "Removal and Installation".

Special Repair Requirement

INFOID:0000000001712695

1. ADDITIONAL SERVICE WHEN REPLACING BCM

>> Refer to BCS-3, "ADDITIONAL SERVICE WHEN REPLACING CONTROL UNIT : Special Repair Requirement".

COMBINATION SWITCH

Description

INFOID:0000000001712696

COMBINATION SWITCH MATRIX

Combination switch consists of INPUT circuit and OUTPUT circuit.

Combination switch circuit

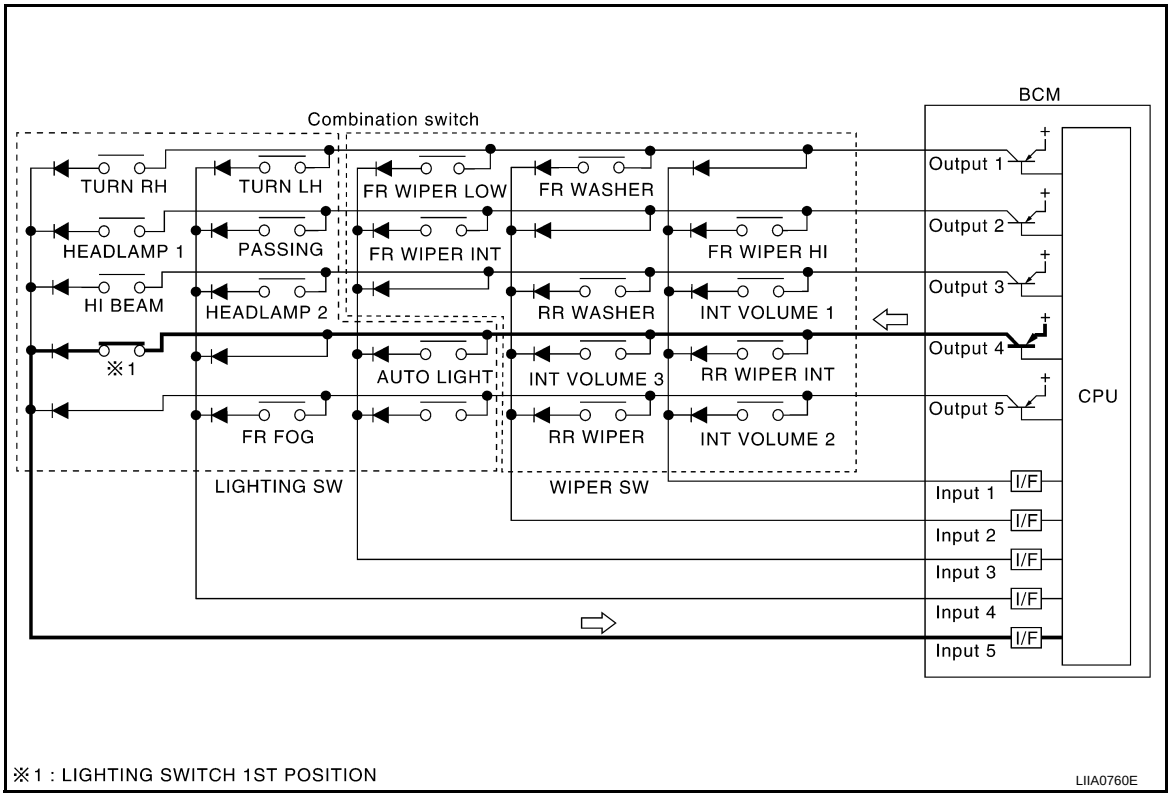

Combination switch INPUT-OUTPUT system list

System	OUTPUT 1	OUTPUT 2	OUTPUT 3	OUTPUT 4	OUTPUT 5
INPUT 1	—	FR WASHER	FR WIPER LOW	TURN LH	TURN RH
INPUT 2	FR WIPER HI	—	FR WIPER INT	PASSING	HEADLAMP 1
INPUT 3	INT VOLUME 1	RR WASHER	—	HEADLAMP 2	HI BEAM
INPUT 4	RR WIPER INT	INT VOLUME 3	AUTO LIGHT	—	TAIL LAMP
INPUT 5	INT VOLUME 2	RR WIPER	—	FR FOG	—

NOTE:

Headlamp has a dual system switch.

Diagnosis Procedure

INFOID:0000000001712697

1. CHECK LIGHT & TURN SIGNAL SWITCH

Check operation with normal light & turn signal switch installed.

Does it operate normally?

YES >> Replace light & turn signal switch. Refer to EXL-116, "Removal and Installation".

NO >> GO TO 2

2. CHECK WIPER & WASHER SWITCH

Check operation with normal wiper & washer switch installed.

Does it operate normally?

YES >> Replace wiper & washer switch. Refer to WW-49, "Removal and Installation".

NO >> GO TO 3

3. CHECK SWITCH BASE (SPIRAL CABLE)

Check operation with normal switch base (spiral cable) installed.

Does it operate normally?

YES >> Replace switch base (spiral cable). Refer to SR-6, "Removal and Installation".
NO >> Combination switch is normal.

ECU DIAGNOSIS

BCM (BODY CONTROL MODULE)

Reference Value

INFOID:0000000001712698

VALUES ON THE DIAGNOSIS TOOL

Monitor Item	Condition	Value/Status
AIR COND SW	A/C switch OFF	OFF
	A/C switch ON	ON
AUT LIGHT SYS	Outside of the room is dark	OFF
	Outside of the room is bright	ON
AUTO LIGHT SW	Lighting switch OFF	OFF
	Lighting switch AUTO	ON
BACK DOOR SW	Back door closed	OFF
	Back door opened	ON
CDL LOCK SW	Door lock/unlock switch does not operate	OFF
	Press door lock/unlock switch to the LOCK side	ON
CDL UNLOCK SW	Door lock/unlock switch does not operate	OFF
	Press door lock/unlock switch to the UNLOCK side	ON
DOOR SW-AS	Front door RH closed	OFF
	Front door RH opened	ON
DOOR SW-DR	Front door LH closed	OFF
	Front door LH opened	ON
DOOR SW-RL	Rear door LH closed	OFF
	Rear door LH opened	ON
DOOR SW-RR	Rear door RH closed	OFF
	Rear door RH opened	ON
ENGINE RUN	Engine stopped	OFF
	Engine running	ON
FR FOG SW	Front fog lamp switch OFF	OFF
	Front fog lamp switch ON	ON
FR WASHER SW	Front washer switch OFF	OFF
	Front washer switch ON	ON
FR WIPER LOW	Front wiper switch OFF	OFF
	Front wiper switch LO	ON
FR WIPER HI	Front wiper switch OFF	OFF
	Front wiper switch HI	ON
FR WIPER INT	Front wiper switch OFF	OFF
	Front wiper switch INT	ON
FR WIPER STOP	Any position other than front wiper stop position	OFF
	Front wiper stop position	ON
HAZARD SW	When hazard switch is not pressed	OFF
	When hazard switch is pressed	ON
LIGHT SW 1ST	Lighting switch OFF	OFF
	Lighting switch 1st	ON

Monitor Item	Condition	Value/Status
HEADLAMP SW1	Headlamp switch OFF	OFF
	Headlamp switch 1st	ON
HEADLAMP SW2	Headlamp switch OFF	OFF
	Headlamp switch 1st	ON
HI BEAM SW	High beam switch OFF	OFF
	High beam switch HI	ON
H/L WASH SW	**NOTE:** The item is indicated, but not monitored	OFF
IGN ON SW	Ignition switch OFF or ACC	OFF
	Ignition switch ON	ON
IGN SW CAN	Ignition switch OFF or ACC	OFF
	Ignition switch ON	ON
INT VOLUME	Wiper intermittent dial is in a dial position 1 - 7	1 - 7
I-KEY LOCK[1]	LOCK button of Intelligent Key is not pressed	OFF
	LOCK button of Intelligent Key is pressed	ON
I-KEY UNLOCK[1]	UNLOCK button of Intelligent Key is not pressed	OFF
	UNLOCK button of Intelligent Key is pressed	ON
KEY ON SW	Mechanical key is removed from key cylinder	OFF
	Mechanical key is inserted to key cylinder	ON
KEYLESS LOCK[2]	LOCK button of key fob is not pressed	OFF
	LOCK button of key fob is pressed	ON
KEYLESS UNLOCK[2]	UNLOCK button of key fob is not pressed	OFF
	UNLOCK button of key fob is pressed	ON
OIL PRESS SW	• Ignition switch OFF or ACC • Engine running	OFF
	Ignition switch ON	ON
PASSING SW	Other than lighting switch PASS	OFF
	Lighting switch PASS	ON
PUSH SW[1]	Return to ignition switch to LOCK position	OFF
	Press ignition switch	ON
REAR DEF SW	Rear window defogger switch OFF	OFF
	Rear window defogger switch ON	ON
RKE LOCK AND UNLOCK[2]	**NOTE:** The item is indicated, but not monitored	OFF
		ON
RR WASHER SW	Rear washer switch OFF	OFF
	Rear washer switch ON	ON
RR WIPER INT	Rear wiper switch OFF	OFF
	Rear wiper switch INT	ON
RR WIPER ON	Rear wiper switch OFF	OFF
	Rear wiper switch ON	ON
RR WIPER STOP	Rear wiper stop position	OFF
	Other than rear wiper stop position	ON
TAIL LAMP SW	Lighting switch OFF	OFF
	Lighting switch 1ST	ON

Monitor Item	Condition	Value/Status
TRNK OPNR SW	When back door opener switch is not pressed	OFF
	When back door opener switch is pressed	ON
TURN SIGNAL L	Turn signal switch OFF	OFF
	Turn signal switch LH	ON
TURN SIGNAL R	Turn signal switch OFF	OFF
	Turn signal switch RH	ON
VEHICLE SPEED	While driving	Equivalent to speedometer reading

1: With Intelligent Key

2: With remote keyless entry system

Terminal Layout

INFOID:0000000001712699

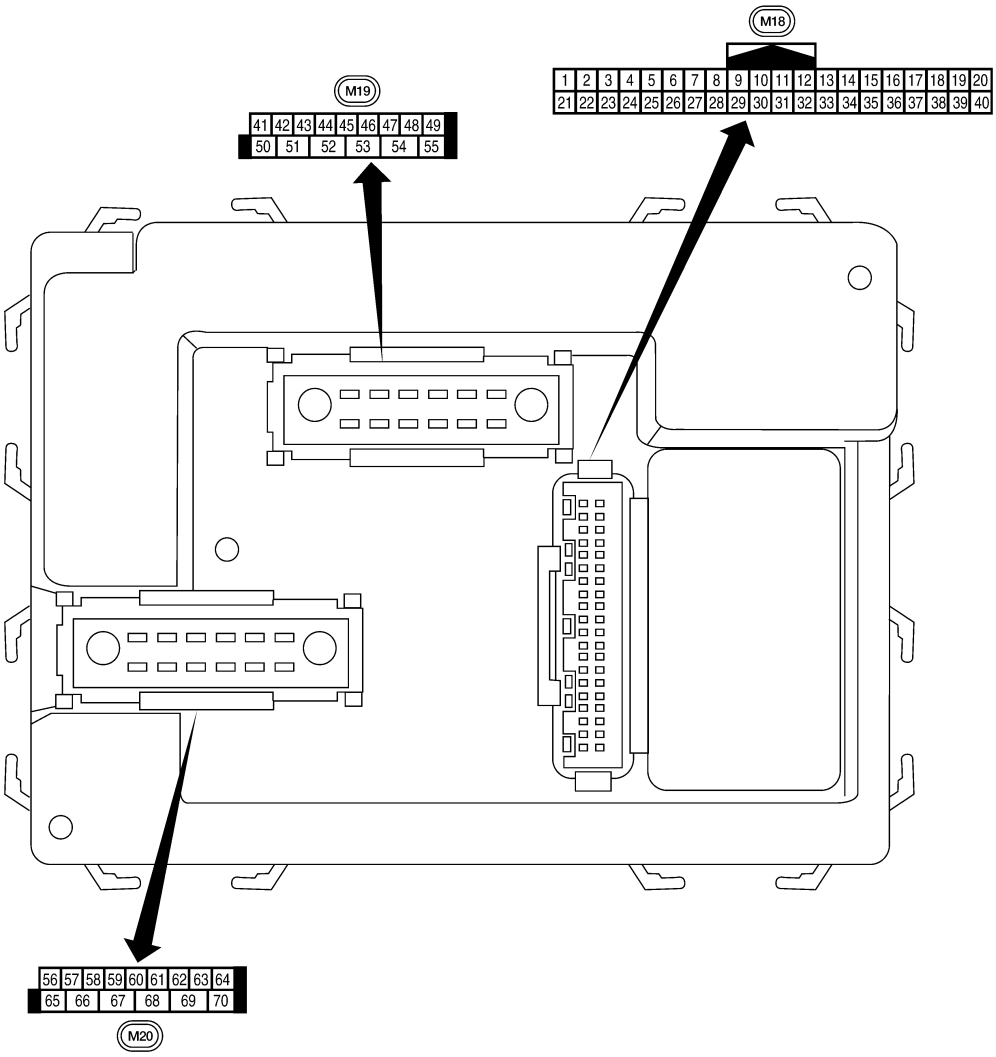

LIIA2443E

Physical Values

INFOID:0000000001712700

Terminal	Wire color	Signal name	Signal input/ output	Measuring condition		Reference value or waveform (Approx.)
				Ignition switch	Operation or condition	
1	BR	Ignition keyhole illumination	Output	OFF	Door is locked (SW OFF)	Battery voltage
					Door is unlocked (SW ON)	0V
2	P	Combination switch input 5	Input	ON	Lighting, turn, wiper OFF Wiper dial position 4	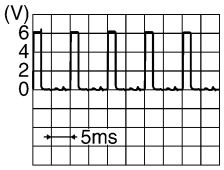 SKIA5291E
3	SB	Combination switch input 4	Input	ON	Lighting, turn, wiper OFF Wiper dial position 4	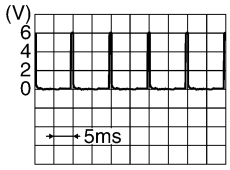 SKIA5292E
4	V	Combination switch input 3	Input	ON	Lighting, turn, wiper OFF Wiper dial position 4	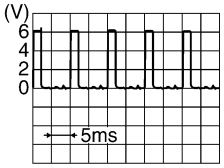 SKIA5291E
5	L	Combination switch input 2	Input	ON	Lighting, turn, wiper OFF Wiper dial position 4	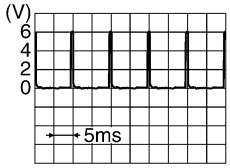 SKIA5292E
6	R	Combination switch input 1				
9	Y	Rear window defogger switch	Input	ON	Rear window defogger switch ON	0V
					Rear window defogger switch OFF	5V
11	G/B	Ignition switch (ACC or ON)	Input	ACC or ON	Ignition switch ACC or ON	Battery voltage
12	LG	Front door switch RH	Input	OFF	ON (open)	0V
					OFF (closed)	Battery voltage
13	L	Rear door switch RH	Input	OFF	ON (open)	0V
					OFF (closed)	Battery voltage
15	W	Tire pressure warning check connector	Input	OFF	—	5V
18	BR	Remote keyless entry receiver and optical sensor (ground)	Output	OFF	—	0V

Terminal	Wire color	Signal name	Signal input/ output	Measuring condition		Reference value or waveform (Approx.)
				Ignition switch	Operation or condition	
19	V	Remote keyless entry receiver (power supply)	Output	OFF	Ignition switch OFF	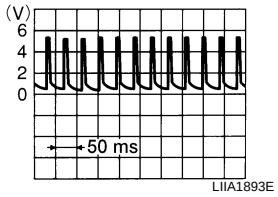
20	G	Remote keyless entry receiver (signal)	Input	OFF	Stand-by (keyfob buttons released)	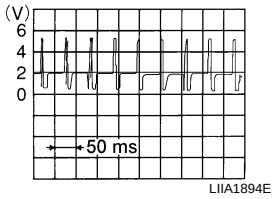
					When remote keyless entry receiver receives signal from keyfob (keyfob buttons pressed)	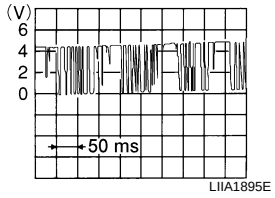
21	GR	NATS antenna amp.	Input	OFF → ON	Ignition switch (OFF → ON)	Just after turning ignition switch ON: Pointer of tester should move for approx. 1 second, then return to battery voltage.
22	V	BUS	—	—	Ignition switch ON or power window timer operates	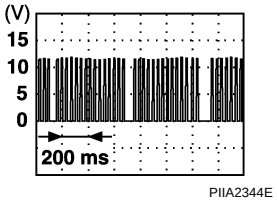
23	G	Security indicator lamp	Output	OFF	Goes OFF → illuminates (Every 2.4 seconds)	Battery voltage → 0V
25	BR	NATS antenna amp.	Input	OFF → ON	Ignition switch (OFF → ON)	Just after turning ignition switch ON: Pointer of tester should move for approx. 1 second, then return to battery voltage.
27	W	Compressor ON signal	Input	ON	A/C switch OFF	5V
					A/C switch ON	0V
28	LG	Front blower monitor	Input	ON	Front blower motor OFF	Battery voltage
					Front blower motor ON	0V
29	G	Hazard switch	Input	OFF	ON	0V
					OFF	5V

Terminal	Wire color	Signal name	Signal input/ output	Measuring condition		Reference value or waveform (Approx.)
				Ignition switch	Operation or condition	
32	O	Combination switch output 5	Output	ON	Lighting, turn, wiper OFF Wiper dial position 4	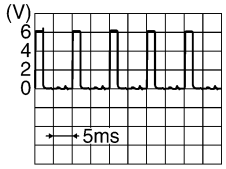 SKIA5291E
33	GR	Combination switch output 4	Output	ON	Lighting, turn, wiper OFF Wiper dial position 4	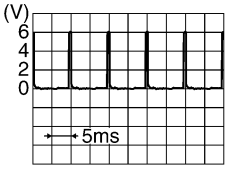 SKIA5292E
34	G	Combination switch output 3	Output	ON	Lighting, turn, wiper OFF Wiper dial position 4	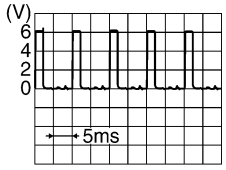 SKIA5291E
35	BR	Combination switch output 2	Output	ON	Lighting, turn, wiper OFF Wiper dial position 4	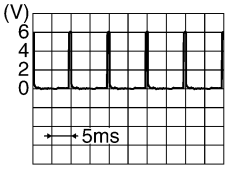 SKIA5292E
36	LG	Combination switch output 1				
37[1]	B	Key switch and ignition knob switch	Input	OFF	Intelligent Key inserted	Battery voltage
					Intelligent Key inserted	0V
37[2]	B	Key switch and key lock solenoid	Input	OFF	Key inserted	Battery voltage
					Key inserted	0V
38	W/R	Ignition switch (ON)	Input	ON	—	Battery voltage
39	L	CAN-H	—	—	—	—
40	P	CAN-L	—	—	—	—
42	LG	Glass hatch ajar switch	Input	ON	Glass hatch open	0
					Glass hatch closed	Battery
43	SB	Back door switch (without power back door) or back door latch (door ajar switch) (with power back door)	Input	OFF	ON (open)	0V
					OFF (closed)	Battery voltage

Terminal	Wire color	Signal name	Signal input/ output	Measuring condition		Reference value or waveform (Approx.)
				Ignition switch	Operation or condition	
44	SB	Rear wiper auto stop switch	Input	ON	Rise up position (rear wiper arm on stopper)	0V
					A Position (full clockwise stop position)	Battery voltage
					Forward sweep (counterclockwise direction)	Fluctuating
					B Position (full counterclockwise stop position)	0V
					Reverse sweep (clockwise direction)	Fluctuating
47	GR	Front door switch LH	Input	OFF	ON (open)	0V
					OFF (closed)	Battery voltage
48	P	Rear door switch LH	Input	OFF	ON (open)	0V
					OFF (closed)	Battery voltage
49	L	Cargo lamp	Output	OFF	Any door open (ON)	0V
					All doors closed (OFF)	Battery voltage
51	G	Trailer turn signal (right)	Output	ON	Turn right ON	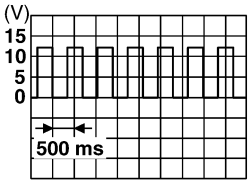 SKIA3009J
52	V	Trailer turn signal (left)	Output	ON	Turn left ON	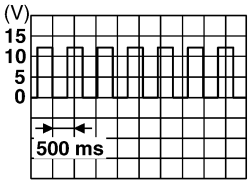 SKIA3009J
55	W	Rear wiper output circuit 1	Output	ON	OFF	0
					ON	Battery voltage
56	V	Battery saver output	Output	OFF	30 minutes after ignition switch is turned OFF	0V
				ON	—	Battery voltage
57	R/Y	Battery power supply	Input	OFF	—	Battery voltage
58	W	Optical sensor	Input	ON	When optical sensor is illuminated	3.1V or more
					When optical sensor is not illuminated	0.6V or less
59	GR	Front door lock assembly LH actuator (unlock)	Output	OFF	OFF (neutral)	0V
					ON (unlock)	Battery voltage

Terminal	Wire color	Signal name	Signal input/ output	Measuring condition			Reference value or waveform (Approx.)
				Ignition switch	Operation or condition		
60	LG	Turn signal (left)	Output	ON	Turn left ON		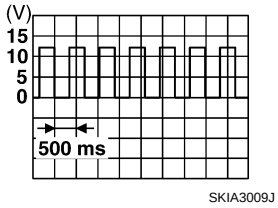
61	G	Turn signal (right)	Output	ON	Turn right ON		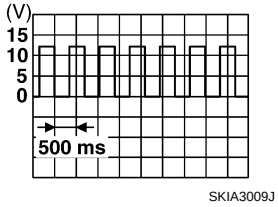
63	BR	Interior room/map lamp	Output	OFF	Any door switch	ON (open)	0V
						OFF (closed)	Battery voltage
65	V	All door lock actuators (lock)	Output	OFF	OFF (neutral)		0V
					ON (lock)		Battery voltage
66	L	Front door lock actuator RH, rear door lock actuators LH/RH and back door lock actuator (unlock)	Output	OFF	OFF (neutral)		0V
					ON (unlock)		Battery voltage
67	B	Ground	Input	ON	—		0V
68	O	Power window power supply (RAP)	Output	—	Ignition switch ON		Battery voltage
					Within 45 seconds after ignition switch OFF		Battery voltage
					More than 45 seconds after ignition switch OFF		0V
					When front door LH or RH is open or power window timer operates		0V
69	L	Power window power supply	Output	—	—		Battery voltage
70	W	Battery power supply	Input	OFF	—		Battery voltage

1: With remote keyless entry system

2: With Intelligent Key system

Wiring Diagram

INFOID:0000000001712701

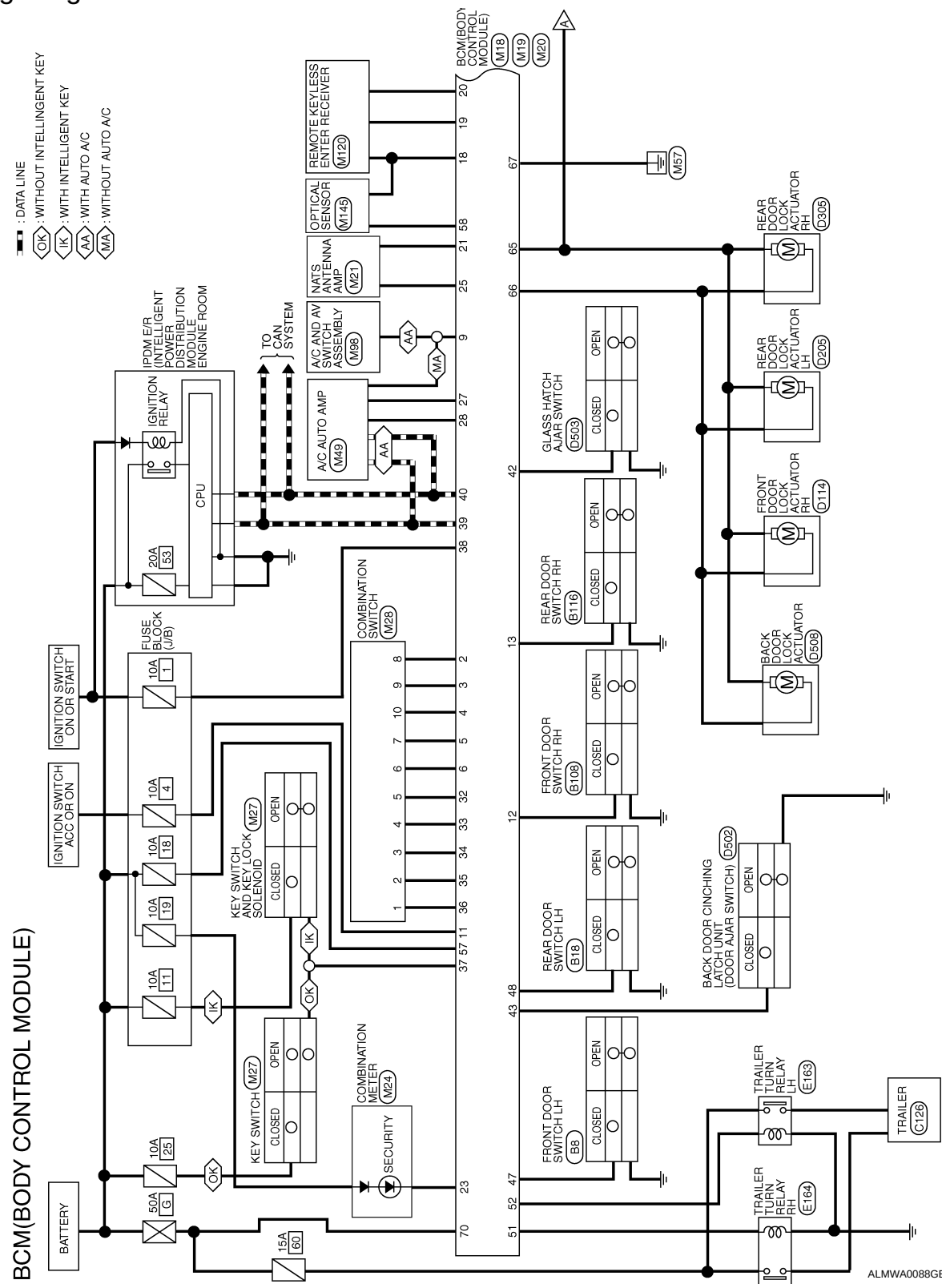

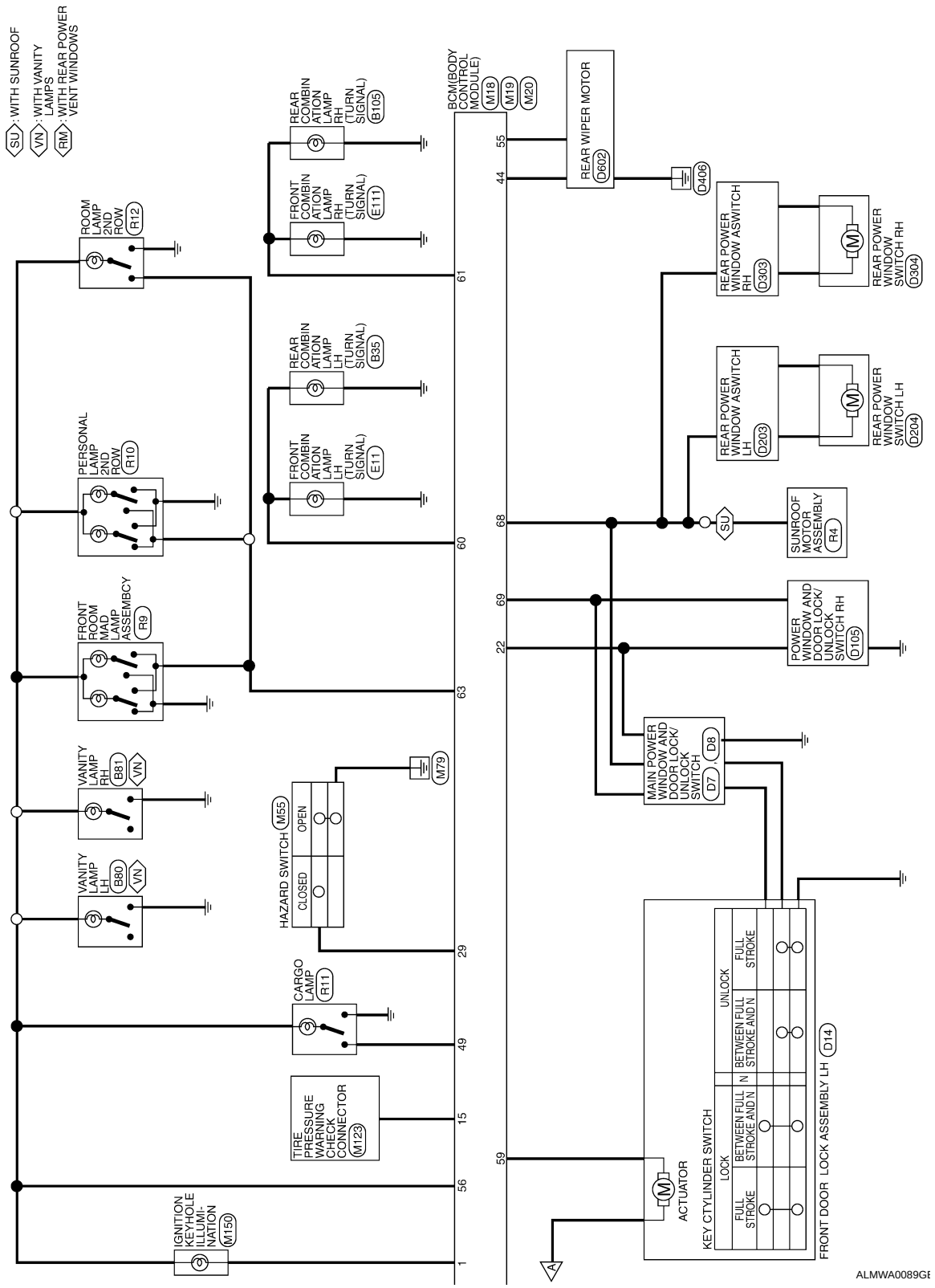
SU : WITH SUNROOF
VN : WITH VANITY LAMPS
RM : WITH REAR POWER VENT WINDOWS
ROOM LAMP 2ND ROW R12
PERSONAL LAMP 2ND ROW R10
FRONT ROOM MAD LAMP ASSEMBCY R9
VANITY LAMP RH B81 VN
VANITY LAMP LH B80 VN
IGNITION KEYHOLE ILLUMI-NATION M150
TIRE PRESSURE WARNING CHECK CONNECTOR M123
CARGO LAMP R11
HAZARD SWITCH M55
CLOSED
OPEN
M79
FRONT COMBIN ATION LAMP LH (TURN SIGNAL) E11
REAR COMBIN ATION LAMP LH (TURN SIGNAL) B35
FRONT COMBIN ATION LAMP RH (TURN SIGNAL) E111
REAR COMBIN ATION LAMP RH (TURN SIGNAL) B105
BCM(BODY CONTROL MODULE) M18 M19 M20
1 56 15 49 29 63 60 61 59 22 69 68 44 55
REAR WIPER MOTOR D602
D406
REAR POWER WINDOW ASWITCH RH D303
REAR POWER WINDOW SWITCH RH D304
REAR POWER WINDOW ASWITCH LH D203
REAR POWER WINDOW SWITCH LH D204
SU
SUNROOF MOTOR ASSEMBLY R4
POWER WINDOW AND DOOR LOCK/ UNLOCK SWITCH RH D105
MAIN POWER WINDOW AND DOOR LOCK/ UNLOCK SWITCH D7 D8
ACTUATOR
KEY CYLINDER SWITCH
LOCK
UNLOCK
FULL STROKE
BETWEEN FULL STROKE AND N
FRONT DOOR LOCK ASSEMBLY LH D14
A
ALMWA0089GB

BCS CONNECTORS

Connector No.	M18
Connector Name	BCM (BODY CONTROL MODULE)
Connector Color	WHITE

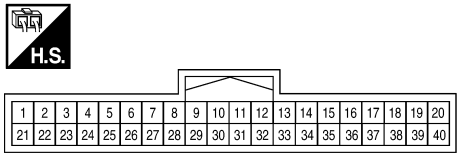

Terminal No.	Color of Wire	Signal Name
1	BR	IGN KEY ILL
2	P	COMBI SW INPUT 5
3	SB	COMBI SW INPUT 4
4	V	COMBI SW INPUT 3
5	L	COMBI SW INPUT 2
6	R	COMBI SW INPUT 1
9	Y	RR DEF SW
11	G/B	ACC SW
12	LG	DOOR SW (AS)
13	L	DOOR SW (RR)
15	W	P/WARN CHECK
18	BR	SENSOR GND
19	V	PWR
20	G	SIGNAL
21	GR	IMMOBILSER ATNENNA SIG (CLOCK)
22	V	BUS
23	G	SECURITY INDICATOR OUTPUT
25	BR	IMMOB ATNENNA SIG (TX,RX)
27	W	AIRCON_SW
28	LG	BLOWER_FAN_SW
29	G	HAZARD SW
32	O	COMBI SW OUTPUT 5
33	GR	COMBI SW OUTPUT 4
34	G	COMBI SW OUTPUT 3
35	BR	COMBI SW OUTPUT 2
36	LG	COMBI SW OUTPUT 1
37	B	KEY SW
38	W/R	IGN SW
39	L	CAN-H
40	P	CAN-L

Connector No.	M19
Connector Name	BCM (BODY CONTROL MODULE)
Connector Color	WHITE

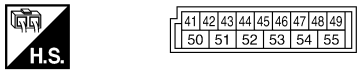

Terminal No.	Color of Wire	Signal Name
42	LG	GLASS HATCH AJAR
43	SB	BACK DOOR SW
44	SB	AUTO-STOP
47	GR	DOOR SW (DR)
48	P	DOOR SW (RL)
49	L	LUGGAGE LAMP OUTPUT
51	G	TRAILER RIGHT FLASHER
52	V	TRAILER LEFT FLASHER
55	W	RR WIPER O/P (MTR)

ALMIA0254GB

Connector No.	M20
Connector Name	BCM (BODY CONTROL MODULE)
Connector Color	BLACK

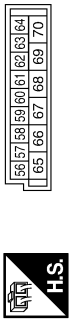

Terminal No.	Color of Wire	Signal Name
56	V	BAT SAVER
57	R/Y	BAT (FUSE)
58	W	AUTO LIGHT SENSOR INPUT
59	GR	DOOR UNLOCK OUTPUT (DR)
60	LG	FLASHER OUTPUT (LEFT)
61	G	FLASHER OUTPUT (RIGHT)
63	BR	ROOM LAMP
65	V	DOOR LOCK OUTPUT (ALL)
66	L	DOOR UNLOCK OUTPUT (OTHER)
67	B	GND (POWER)
68	O	POWER WINDOW POWER SUPPLY (RAP)
69	L	POWER WINDOW POWER SUPPLY (BAT)
70	W	BAT (F/L)

ALMIA0255GB

DTC Inspection Priority Chart

INFOID:0000000001712702

If some DTCs are displayed at the same time, perform inspections one by one based on the following priority chart.

Priority	DTC
1	• U1000: CAN COMM CIRCUIT • U1010: CONTROL UNIT (CAN)
2	• B2190: NATS ANTENNA AMP • B2191: DIFFERENCE OF KEY • B2192: ID DISCORD BCM-ECM • B2193: CHAIN OF BCM-ECM • B2013: STRG COMM 1 • B2552: INTELLIGENT KEY • B2590: NATS MALFUNCTION
3	• C1729: VHCL SPEED SIG ERR
4	• C1704: LOW PRESSURE FL • C1705: LOW PRESSURE FR • C1706: LOW PRESSURE RR • C1707: LOW PRESSURE RL • C1708: [NO DATA] FL • C1709: [NO DATA] FR • C1710: [NO DATA] RR • C1711: [NO DATA] RL • C1712: [CHECKSUM ERR] FL • C1713: [CHECKSUM ERR] FR • C1714: [CHECKSUM ERR] RR • C1715: [CHECKSUM ERR] RL • C1716: [PRESSDATA ERR] FL • C1717: [PRESSDATA ERR] FR • C1718: [PRESSDATA ERR] RR • C1719: [PRESSDATA ERR] RL • C1720: [CODE ERR] FL • C1721: [CODE ERR] FR • C1722: [CODE ERR] RR • C1723: [CODE ERR] RL • C1724: [BATT VOLT LOW] FL • C1725: [BATT VOLT LOW] FR • C1726: [BATT VOLT LOW] RR • C1727: [BATT VOLT LOW] RL

DTC Index

INFOID:0000000001712703

NOTE:

Details of time display

- CRNT: Displays when there is a malfunction now or after returning to the normal condition until turning ignition switch OFF → ON again.
- 1 - 39: Displayed if any previous malfunction is present when current condition is normal. It increases like 1 → 2 → 3...38 → 39 after returning to the normal condition whenever ignition switch OFF → ON. The counter remains at 39 even if the number of cycles exceeds it. It is counted from 1 again when turning ignition switch OFF → ON after returning to the normal condition if the malfunction is detected again.

CONSULT display	Fail-safe	Intelligent Key warning lamp ON	Tire pressure monitor warning lamp ON	Reference page
No DTC is detected. further testing may be required.	—	—	—	—
U1000: CAN COMM CIRCUIT	—	—	—	BCS-30
U1010: CONTROL UNIT (CAN)	—	—	—	BCS-31
B2013: STRG COMM 1	—	—	—	SEC-27
B2190: NATS ANTTENA AMP	—	—	—	SEC-30 (with I-Key), SEC-111 (without I-Key)

CONSULT display	Fail-safe	Intelligent Key warning lamp ON	Tire pressure monitor warning lamp ON	Reference page
B2191: DIFFERENCE OF KEY	—	—	—	SEC-33 (with I-Key), SEC-114 (without I-Key)
B2192: ID DISCORD BCM-ECM	—	—	—	SEC-34 (with I-Key), SEC-115 (without I-Key)
B2193: CHAIN OF BCM-ECM	—	—	—	SEC-36 (with I-Key), SEC-117 (without I-Key)
B2552: INTELLIGENT KEY	—	—	—	SEC-38
B2590: NATS MALFUNCTION	—	—	—	SEC-39
C1708: [NO DATA] FL	—	—	—	WT-13
C1709: [NO DATA] FR	—	—	—	WT-13
C1710: [NO DATA] RR	—	—	—	WT-13
C1711: [NO DATA] RL	—	—	—	WT-13
C1712: [CHECKSUM ERR] FL	—	—	—	WT-15
C1713: [CHECKSUM ERR] FR	—	—	—	WT-15
C1714: [CHECKSUM ERR] RR	—	—	—	WT-15
C1715: [CHECKSUM ERR] RL	—	—	—	WT-15
C1716: [PRESSDATA ERR] FL	—	—	—	WT-17
C1717: [PRESSDATA ERR] FR	—	—	—	WT-17
C1718: [PRESSDATA ERR] RR	—	—	—	WT-17
C1719: [PRESSDATA ERR] RL	—	—	—	WT-17
C1720: [CODE ERR] FL	—	—	—	WT-15
C1721: [CODE ERR] FR	—	—	—	WT-15
C1722: [CODE ERR] RR	—	—	—	WT-15
C1723: [CODE ERR] RL	—	—	—	WT-15
C1724: [BATT VOLT LOW] FL	—	—	—	WT-15
C1725: [BATT VOLT LOW] FR	—	—	—	WT-15
C1726: [BATT VOLT LOW] RR	—	—	—	WT-15
C1727: [BATT VOLT LOW] RL	—	—	—	WT-15
C1729: VHCL SPEED SIG ERR	—	—	—	WT-18
C1734: CONTROL UNIT	—	—	—	—

SYMPTOM DIAGNOSIS

COMBINATION SWITCH SYSTEM SYMPTOMS

Symptom Table

INFOID:0000000001712704

1. Perform the data monitor of CONSULT-III to check for any malfunctioning item.
2. Check the malfunction combinations.

Malfunction item: ×

Data monitor item																	Malfunction combination
TURN SIGNAL R	TURN SIGNAL L	HI BEAM SW	HEADLAMP SW 1	HEADLAMP SW 2	TAIL LAMP SW	PASSING SW	AUTO LIGHT SW	FR FOG SW	FR WIPER HI	FR WIPER LOW	FR WIPER INT	FR WASHER SW	INT VOLUME	RR WIPER ON	RR WIPER INT	RR WASHER SW	
×	×									×		×					A
			×			×			×		×						B
		×		×									×			×	C
					×		×						×		×		D
								×					×	×			E
									×				×		×		F
												×	×	×		×	G
							×			×	×						H
	×			×		×		×									I
×		×	×		×												J
Combinations other than those above																	K
All Items																	L
If only one item is detected or the item is not applicable to the combinations A to L																	M

3. Identify the malfunctioning part from the agreed combination and repair or replace the part.

Malfunction combination	Malfunctioning part	Repair or replace
A	Combination switch INPUT 1 circuit	Inspect the combination switch input circuit applicable to the malfunctioning part. Refer to BCS-33, "Diagnosis Procedure".
B	Combination switch INPUT 2 circuit	
C	Combination switch INPUT 3 circuit	
D	Combination switch INPUT 4 circuit	
E	Combination switch INPUT 5 circuit	
F	Combination switch OUTPUT 1 circuit	Inspect the combination switch output circuit applicable to the malfunctioning part. Refer to BCS-35, "Diagnosis Procedure".
G	Combination switch OUTPUT 2 circuit	
H	Combination switch OUTPUT 3 circuit	
I	Combination switch OUTPUT 4 circuit	
J	Combination switch OUTPUT 5 circuit	
K	Light and turn signal switch or front wiper and washer switch	Refer to BCS-36, "Description".
L	BCM	Replace BCM. Refer to BCS-54, "Removal and Installation".
M	Light and turn signal switch or front wiper and washer switch	Replace the switch that cannot be operated.

ON-VEHICLE REPAIR

BCM (BODY CONTROL MODULE)

Removal and Installation

INFOID:0000000001678397

REMOVAL

NOTE:

If possible, before removing BCM, retrieve current BCM configuration to use for reference when configuring brand-new BCM after installation. Refer to BCS-4, "CONFIGURATION : Special Repair Requirement".

1. Disconnect the battery negative terminal.
2. Remove the lower instrument panel LH. Refer to IP-10, "Exploded View".
3. Remove the knee protector. Refer to IP-10, "Exploded View".
4. Remove the BCM screws and release the BCM.
5. Disconnect the BCM connectors and then remove the BCM.

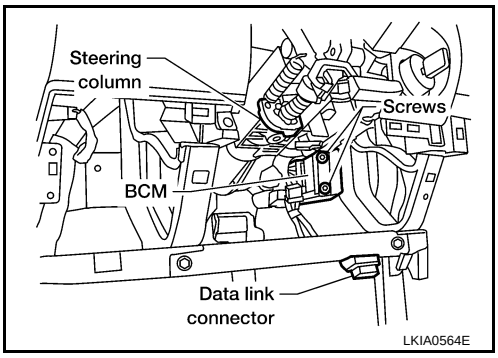

INSTALLATION

Installation is in the reverse order of removal.

NOTE:

- When replacing the BCM, it must be configured. Refer to BCS-4, "CONFIGURATION : Special Repair Requirement".
- When replacing the BCM, perform initialization of NATS system and registration of all NATS ignition key IDs. Refer to SEC-8.
- When replacing the BCM, perform ID registration procedure of low tire pressure warning system. Refer to WT-6, "ID Registration Procedure".
- When replacing the BCM, register the remote keyless entry system keyfob ID codes. Refer to DLK-11, "ADDITIONAL SERVICE WHEN REPLACING CONTROL UNIT : Special Repair Requirement".
- When replacing the BCM, perform adjustment procedure for the steering angle sensor. Refer to BRC-11, "ADJUSTMENT OF STEERING ANGLE SENSOR NEUTRAL POSITION : Special Repair Requirement" (VDC/TCS/ABS) or BRC-131, "ADJUSTMENT OF STEERING ANGLE SENSOR NEUTRAL POSITION : Special Repair Requirement" (HDC/HSA/VDS/TCS/ABS).