SECTION AT
AUTOMATIC TRANSAXLE

CONTENTS

SERVICE INFORMATION

INDEX FOR DTC

Alphabetical Index

INFOID:0000000001717837

NOTE:
If DTC U1000 is displayed with other DTCs, first perform the trouble diagnosis for DTC U1000. Refer to AT-77.

Items (CONSULT-III screen terms)	DTC		Reference page
	OBD-II	Except OBD-II	
	CONSULT-III GST*1	CONSULT-III only "TRANSMISSION"	
A/T 1ST GR FNCTN	P0731	P0731	AT-108
A/T 2ND GR FNCTN	P0732	P0732	AT-111
A/T 3RD GR FNCTN	P0733	P0733	AT-116
A/T 4TH GR FNCTN	P0734	P0734	AT-120
A/T 5TH GR FNCTN	P0735	P0735	AT-123
A/T TCC S/V FNCTN	P0744	P0744	AT-127
ATF TEMP SEN/CIRC	P0710	P0710	AT-88
CAN COMM CIRCUIT	U1000	U1000	AT-77
ELEC TH CONTROL	—	P1726	AT-192
ENG SPD INP PERFOR	—	P0726	AT-106
FLUID TEMP SEN	P0711	P0711	AT-93
GEAR LEVER SWITCH	—	P0825	AT-184
PC SOL A(L/PRESS)	P0745	P0745	AT-130
PC SOL B(SFT/PRS)	P0775	P0775	AT-165
PC SOL C(TCC&SFT)	P0795	P0795	AT-174
PC SOL C STC ON	P0797	P0797	AT-179
PNP SW/CIRC	P0705	P0705	AT-83
SHIFT	P0780	P0780	AT-170
SHIFT SOL A	P0750	P0750	AT-135
SHIFT SOL B	P0755	P0755	AT-140
SHIFT SOL C	P0760	P0760	AT-145
SHIFT SOL D	P0765	P0765	AT-155
SHIFT SOL E	P0770	P0770	AT-160
SFT SOL C STUCK ON	P0762	P0762	AT-150
TCM POWER INPT SIG	P0882	P0882	AT-188
TCM PROCESSOR	—	P0613	AT-82
TURBINE SENSOR	P0717	P0717	AT-98
VEH SPD SE/CIR-MTR	—	P0500	AT-80
VHCL SPEED SEN-A/T	P0722	P0722	AT-102

*1: These numbers are prescribed by SAE J2012.

DTC No. Index

INFOID:0000000001717838

NOTE:

If DTC U1000 is displayed with other DTCs, first perform the trouble diagnosis for DTC U1000. Refer to AT-77.

DTC		Items (CONSULT-III screen terms)	Reference page
OBD-II	Except OBD-II		
CONSULT-III GST*1	CONSULT-III only "TRANSMISSION"		
—	P0500	VEH SPD SE/CIR-MTR	AT-80
—	P0613	TCM PROCESSOR	AT-82
P0705	P0705	PNP SW/CIRC	AT-83
P0710	P0710	ATF TEMP SEN/CIRC	AT-88
P0711	P0711	FLUID TEMP SEN	AT-93
P0717	P0717	TURBINE SENSOR	AT-98
P0722	P0722	VHCL SPEED SEN-A/T	AT-102
—	P0726	ENG SPD INP PERFOR	AT-106
P0731	P0731	A/T 1ST GR FNCTN	AT-108
P0732	P0732	A/T 2ND GR FNCTN	AT-111
P0733	P0733	A/T 3RD GR FNCTN	AT-116
P0734	P0734	A/T 4TH GR FNCTN	AT-120
P0735	P0735	A/T 5TH GR FNCTN	AT-123
P0744	P0744	A/T TCC S/V FNCTN	AT-127
P0745	P0745	PC SOL A(L/PRESS)	AT-130
P0750	P0750	SHIFT SOL A	AT-135
P0755	P0755	SHIFT SOL B	AT-140
P0760	P0760	SHIFT SOL C	AT-145
P0762	P0762	SFT SOL C STUCK ON	AT-150
P0765	P0765	SHIFT SOL D	AT-155
P0770	P0770	SHIFT SOL E	AT-160
P0775	P0775	PC SOL B(SFT/PRS)	AT-165
P0780	P0780	SHIFT	AT-170
P0795	P0795	PC SOL C(TCC&SFT)	AT-174
P0797	P0797	PC SOL C STC ON	AT-179
—	P0825	GEAR LEVER SWITCH	AT-184
P0882	P0882	TCM POWER INPT SIG	AT-188
—	P1726	ELEC TH CONTROL	AT-192
U1000	U1000	CAN COMM CIRCUIT	AT-77

*1: These numbers are prescribed by SAE J2012.

PRECAUTIONS

Precaution for Supplemental Restraint System (SRS) "AIR BAG" and "SEAT BELT PRE-TENSIONER"

INFOID:0000000001717839

The Supplemental Restraint System such as “AIR BAG” and “SEAT BELT PRE-TENSIONER”, used along with a front seat belt, helps to reduce the risk or severity of injury to the driver and front passenger for certain types of collision. This system includes seat belt switch inputs and dual stage front air bag modules. The SRS system uses the seat belt switches to determine the front air bag deployment, and may only deploy one front air bag, depending on the severity of a collision and whether the front occupants are belted or unbelted. Information necessary to service the system safely is included in the SR and SB section of this Service Manual.

WARNING:

- **To avoid rendering the SRS inoperative, which could increase the risk of personal injury or death in the event of a collision which would result in air bag inflation, all maintenance must be performed by an authorized NISSAN/INFINITI dealer.**
- **Improper maintenance, including incorrect removal and installation of the SRS, can lead to personal injury caused by unintentional activation of the system. For removal of Spiral Cable and Air Bag Module, see the SR section.**
- **Do not use electrical test equipment on any circuit related to the SRS unless instructed to in this Service Manual. SRS wiring harnesses can be identified by yellow and/or orange harnesses or harness connectors.**

Precaution for On Board Diagnosis (OBD) System of A/T and Engine

INFOID:0000000001717840

The ECM has an on board diagnostic system. It will light up the malfunction indicator lamp (MIL) to warn the driver of a malfunction causing emission deterioration.

CAUTION:

- **Be sure to turn the ignition switch “OFF” and disconnect the negative battery cable before any repair or inspection work. The open/short circuit of related switches, sensors, solenoid valves, etc. will cause the MIL to light up.**
- **Be sure to connect and lock the connectors securely after work. A loose (unlocked) connector will cause the MIL to light up due to an open circuit. (Be sure the connector is free from water, grease, dirt, bent terminals, etc.)**
- **Be sure to route and secure the harnesses properly after work. Interference of the harness with a bracket, etc. may cause the MIL to light up due to a short circuit.**
- **Be sure to connect rubber tubes properly after work. A misconnected or disconnected rubber tube may cause the MIL to light up due to a malfunction of the EGR system or fuel injection system, etc.**
- **Be sure to erase the unnecessary malfunction information (repairs completed) from the TCM and ECM before returning the vehicle to the customer.**

Precaution for A/T Assembly or TCM Replacement

INFOID:0000000001717841

- When replacing A/T assembly or TCM, refer to the pattern table below and initialize TCM if necessary.

TCM INITIALIZATION PATTERNS

TCM	A/T assembly	Erasing EEPROM in TCM	Remarks
Replaced with new one	Not replaced	Not required	Not required because the EEPROM in TCM is in the default state.
	Replaced with new or old one		
Not replaced	Replaced with new or old one	Required	Required because data cannot be conformed to previous data written in the EEPROM in TCM.
Replaced with old one	Not replaced		
	Replaced with new or old one		

NOTE:

“Old one” is the TCM or A/T assembly that has been used on other vehicles.

METHOD FOR TCM INITIALIZATION

1. Set the vehicle following the items listed below.
   - Ignition switch “ON”.
   - Selector lever “P” or “N” position.
   - Engine not running.
   - Vehicle speed is 0km/h (0 MPH).
   - Ignition voltage is more than 10.5V.
   - Malfunction was not detected.
2. Touch “WORK SUPPORT”.
3. Touch “INITIALIZATION”.
4. Initialize TCM following the direction in display.

Precaution

INFOID:0000000001717842

NOTE:
Do not remove or disassemble any RE5F22A model transaxle parts unless specified to do so in AT section.

- **Before connecting or disconnecting the TCM harness connector, turn ignition switch “OFF” and disconnect negative battery cable. Because battery voltage is applied to TCM even if ignition switch is turned “OFF”.**

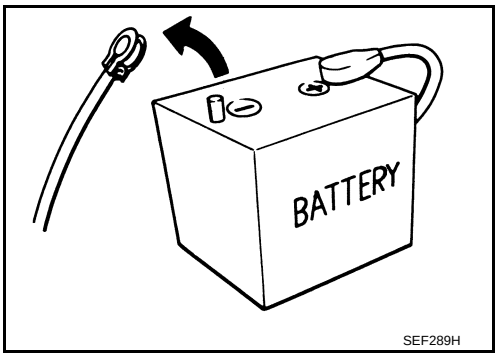

- **When connecting or disconnecting pin connectors into or from TCM, take care not to damage pin terminals (bend or break).**
  Make sure that there are not any bends or breaks on TCM pin terminal, when connecting pin connectors.

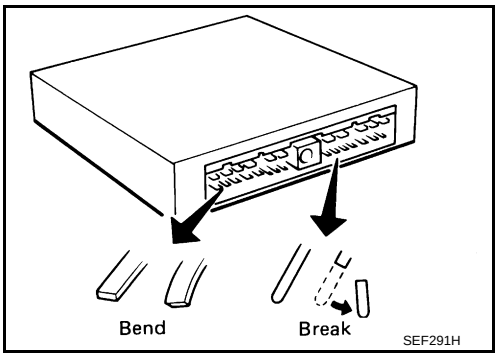

- **Before replacing TCM, perform TCM input/output signal inspection and make sure whether TCM functions properly or not.** **AT-66, "TCM Input/Output Signal Reference Value"**.

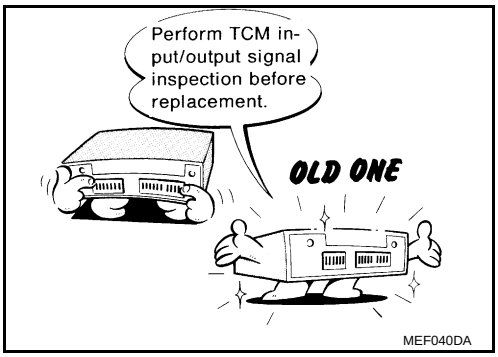

- **After performing each TROUBLE DIAGNOSIS, perform "DTC (Diagnostic Trouble Code) CONFIRMATION PROCEDURE". The DTC should not be displayed in the "DTC CONFIRMATION PROCEDURE" if the repair is completed.**

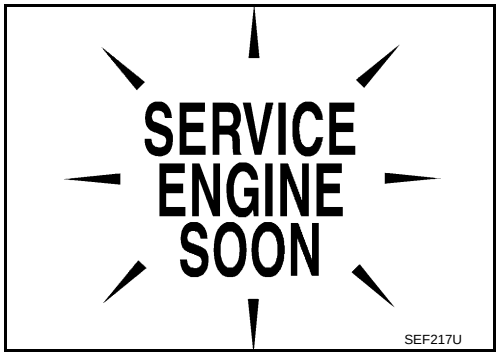

- Always use the specified brand of A/T fluid. Refer to MA-11, "Fluids and Lubricants".
- Use paper rags not cloth rags during work.
- After replacing the A/T fluid, dispose of the waste oil using the methods prescribed by law, ordinance, etc.
- Before proceeding with disassembly, thoroughly clean the outside of the transaxle. It is important to prevent the internal parts from becoming contaminated by dirt or other foreign matter.
- Disassembly should be done in a clean work area.
- Use lint-free cloth or towels for wiping parts clean. Common shop rags can leave fibers that could interfere with the operation of the transaxle.
- Place disassembled parts in order for easier and proper assembly.
- All parts should be carefully cleaned with a general purpose, non-flammable solvent before inspection or reassembly.
- Gaskets, seals and O-rings should be replaced any time the transaxle is disassembled.
- It is very important to perform functional tests whenever they are indicated.
- The valve body contains precision parts and requires extreme care when parts are removed and serviced. Place disassembled valve body parts in order for easier and proper assembly. Care will also prevent springs and small parts from becoming scattered or lost.
- Properly installed valves, sleeves, plugs, etc. will slide along bores in valve body under their own weight.
- Before assembly, apply a coat of recommended ATF to all parts. Apply petroleum jelly to protect O-rings and seals, or hold bearings and washers in place during assembly. Do not use grease.
- Extreme care should be taken to avoid damage to O-rings, seals and gaskets when assembling.
- After overhaul, refill the transaxle with new ATF.
- When the A/T drain plug is removed, only some of the fluid is drained. Old A/T fluid will remain in torque converter and ATF cooling system.
  Always follow the procedures under "Changing A/T Fluid" in the AT section when changing A/T fluid. Refer to AT-13, "Changing A/T Fluid", AT-13, "Checking A/T Fluid".

Service Notice or Precaution

INFOID:0000000001717843

ATF COOLER SERVICE

If A/T fluid contains frictional material (clutches, bands, etc.), or if an A/T is repaired, overhauled, or replaced, inspect and clean the A/T fluid cooler mounted in the radiator or replace the radiator. Flush cooler lines using cleaning solvent and compressed air after repair. For A/T fluid cooler cleaning procedure, refer to AT-14, "A/T Fluid Cooler Cleaning". For radiator replacement, refer to CO-16.

OBD-II SELF-DIAGNOSIS

- A/T self-diagnosis is performed by the TCM in combination with the ECM. The results can be read through the blinking pattern of the O/D OFF indicator or the malfunction indicator lamp (MIL). Refer to the table on AT-69, "CONSULT-III Function (TRANSMISSION)" for the indicator used to display each self-diagnostic result.
- The self-diagnostic results indicated by the MIL are automatically stored in both the ECM and TCM memories.
  Always perform the procedure on AT-36, "OBD-II Diagnostic Trouble Code (DTC)" to complete the repair and avoid unnecessary blinking of the MIL.
- For details of OBD-II, refer to AT-36.
- **Certain systems and components, especially those related to OBD, may use the new style slide-locking type harness connector. For description and how to disconnect, refer to PG-71.**

PREPARATION

Special Service Tool

INFOID:0000000001717844

The actual shapes of Kent-Moore tools may differ from those of special service tools illustrated here.

Tool number (Kent-Moore No.) Tool name	Description
— (J-34301-C) Oil pressure gauge set 1 — (J-34301-1) Oil pressure gauge 2 — (J-34301-2) Hoses 3 — (J-34298) Adapter 4 — (J-34282-2) Adapter 5 — (790-301-1230-A) 60° Adapter 6 — (J-34301-15) Square socket 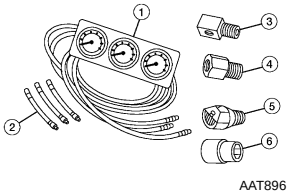 AAT896	Measuring line pressure
KV311J0010 (J-45542) Adapter 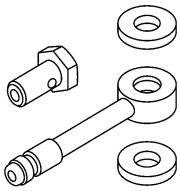 SCIA3019E	Measuring line pressure
KV911J0060 (J-45404) Alignment tool 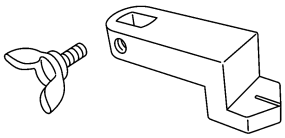 SCIA3018E	Adjusting park/neutral position (PNP) switch
ST33290001 (J-34286) Puller 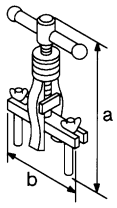 NT414	• Removing oil pump assembly • Removing thrust roller bearing **a: 250 mm(9.84 in)** **b: 160 mm(6.30 in)**
ST33400001 (J-26082) Drift 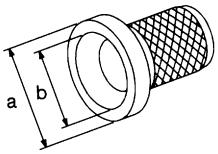 NT086	Installing differential side oil seals **a: 60 mm(2.36 in) dia.** **b: 74 mm(1.85 in) dia.**

Tool number (Kent-Moore No.) Tool name	Description
KV31102400 (J-34285 and J-34285-87) Clutch spring compressor 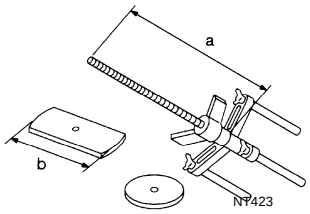	Removing and installing return springs **a: 320 mm(12.60 in)** **b: 174 mm(6.85 in)**
ST30720000 (J-25405) Drift 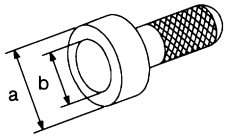	• Installing oil seal • Installing thrust roller bearing **a: 77 mm(3.03 in) dia.** **b: 55.5 mm(2.185 in) dia.**
ST30612000 (J-25742-2) Drift 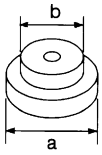	Removing outer race and adjust shim **a: 62 mm(2.44 in) dia.** **b: 40 mm(1.57 in) dia.**
ST3127S000 (J-25765-A) Preload gauge 1 GG91030000 (J-25765-A) Torque wrench 2 HT62940000 (—) Socket adapter 3 HT62900000 (—) Socket adapter 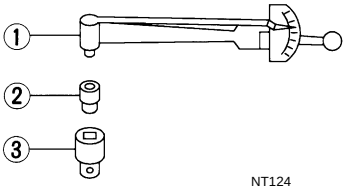	Checking differential side bearing preload
KV40102500 (J-28815) Drift 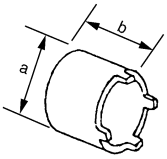	**a: 60 mm(2.362 in) dia.** **b: 45 mm(1.772 in)**
ST33061000 (J-8107-2) Drift 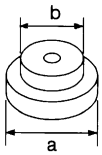	• Removing tapered roller bearing • Installing manual valve oil seal **a: 38 mm(1.496 in) dia.** **b: 28.5 mm(1.122 in) dia.**

Tool number (Kent-Moore No.) Tool name	Description
KV38100500 (—) Drift a:80 mm(3.15 in) dia. b:60 mm(2.362 in) dia. 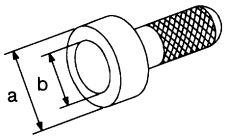 NT115	Installing tapered roller bearing
KV40100621 (J-25273) Drift 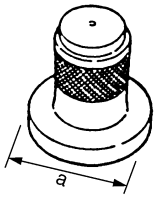 SCIA5518E	Installing outer race and adjust shim **a: 76 mm(2.992 in) dia.**
ST30022000 (—) Drift 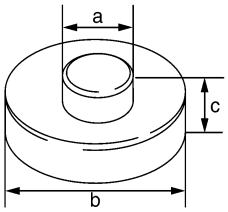 SCIA5519E	**a: 56 mm(2.205 in) dia.** **b: 110 mm(4.331 in) dia.** **c: 15 mm(0.591 in)**

Commercial Service Tool

INFOID:0000000001717845

Tool name	Description
Power tool 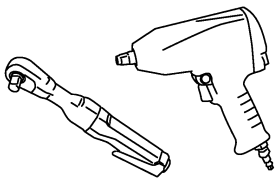 PBIC0190E	Loosening bolts and nuts
Puller 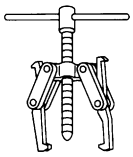 NT077	Removing tapered roller bearing
Puller 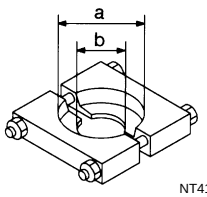 NT411	**a: 60 mm(2.36 in) dia.** **b: 35 mm(1.38 in) dia.**

A/T FLUID

Changing A/T Fluid

INFOID:0000000001717846

1. Run the engine to warm up the transaxle until the fluid is at full operating temperature “HOT”.

Temperature range

COLD : 30° – 40° C (86° – 104° F)

HOT : 70° – 80° C (158° – 176° F)

2. Stop the engine.
3. Remove the engine undercover.
4. Drain the A/T fluid by removing the drain plug. Reinstall the drain plug to the specified tightness using a new drain washer.

Drain plug : 39 N·m (4.0 kg-m, 29 ft-lb)

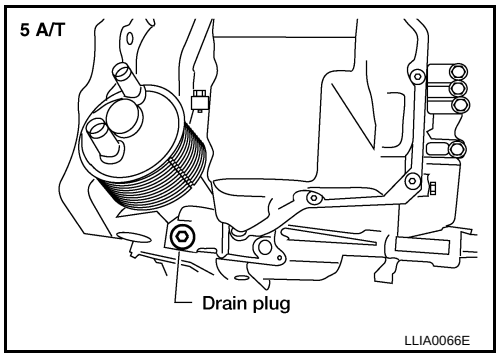

5. Refill the transaxle with new specified A/T fluid through the A/T fluid charging pipe. Always refill the transaxle with the same volume amount that was drained out.

Fluid grade and capacity : Refer to MA-11.

CAUTION:
Do not overfill the transaxle.

6. Run the engine at idle speed for five minutes.
7. Check fluid level and condition. Refer to MA-23, "Checking A/T Fluid". If the fluid is still contaminated, repeat step 2 through 5.

Checking A/T Fluid

INFOID:0000000001717847

1. Warm up the engine.
2. Check for any transaxle fluid leaks.
3. Before driving, the fluid level can be checked at fluid temperature using the “COLD” range on the A/T fluid level gauge.

Temperature range

COLD : 30° – 40° C (86° – 104° F)

HOT : 70° – 80° C (158° – 176° F)

a. Park the vehicle on a level surface and set parking brake.
b. Start the engine and move the transaxle selector lever through each gear position. Leave the selector lever in the “P” park position.

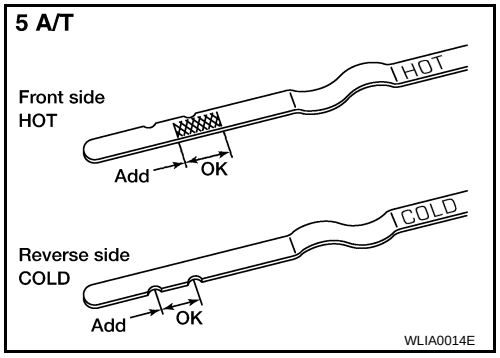

c. Check the fluid level with the engine idling.
CAUTION:
Firmly secure the A/T fluid level gauge into the A/T fluid charging pipe using the attached stopper, this will provide an accurate reading on the gauge.

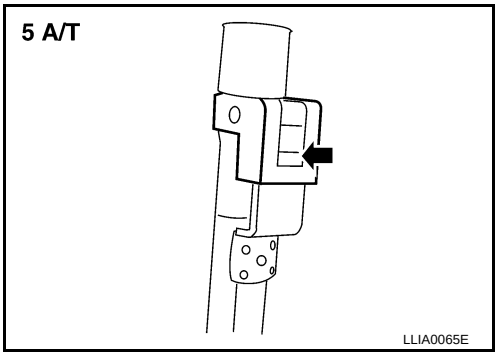

d. Remove the A/T fluid level gauge and wipe it clean with a lint-free paper.
e. Re-insert the A/T fluid level gauge into the charging pipe as far as it will go.
f. Remove the A/T fluid level gauge and note the reading. If the reading is at or below the low side of the range, add the necessary specified A/T fluid through the A/T fluid charging pipe and then re-insert the A/T fluid level gauge.
CAUTION:
- **Do not overfill the transaxle.**
- **Firmly secure the A/T fluid level gauge into the A/T fluid charging pipe using the attached stopper, this will provide an accurate reading on the gauge, and will keep the gauge in position while driving.**

4. Drive the vehicle for approximately 5 minutes at moderate speeds.
5. Re-check the fluid level at fluid temperatures using the “HOT” range on the A/T fluid level gauge.
CAUTION:
Firmly secure the A/T fluid level gauge into the A/T fluid charging pipe using the attached stopper, this will provide an accurate reading on the gauge, and will keep the gauge in position while driving.

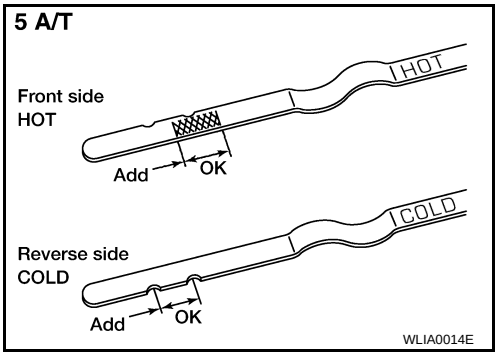

Temperature range

COLD	**: 30° – 40° C (86° – 104° F)**
HOT	**: 70° – 80° C (158° – 176° F)**

6. Check the fluid for the following conditions:
   - If the fluid is very dark or smells burned, refer to the AT-13, "Changing A/T Fluid". Flush the AT fluid cooling system after repairing the transaxle.
   - If the fluid contains frictional material (from the clutches or bands), remove the radiator and flush the cooler lines using a cleaning solvent and compressed air after completing repairs to the transaxle. Refer to CO-16.

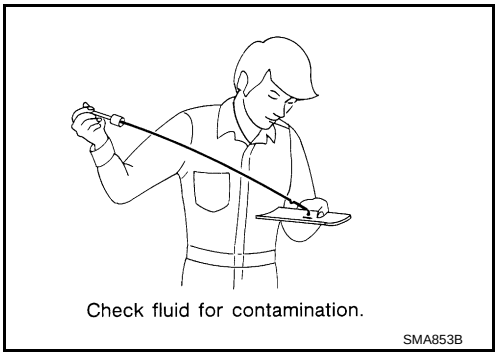

A/T Fluid Cooler Cleaning

INFOID:0000000001717848

Whenever an automatic transaxle is repaired, overhauled, or replaced, the A/T fluid cooler mounted in the radiator must be inspected and cleaned.
Metal debris and friction material, if present, can become trapped in the A/T fluid cooler. This debris can contaminate the newly serviced A/T or, in severe cases, can block or restrict the flow of A/T fluid. In either case, malfunction of the newly serviced A/T may result.
Debris, if present, may build up as A/T fluid enters the cooler inlet. It will be necessary to back flush the cooler through the cooler outlet in order to flush out any built up debris.

A/T FLUID COOLER CLEANING PROCEDURE

1. Position an oil pan under the automatic transaxle's inlet and outlet cooler hoses.
2. Identify the inlet and outlet fluid cooler hoses.

3. Disconnect the fluid cooler inlet and outlet rubber hoses from the steel cooler tubes or bypass valve.
   NOTE:
   Replace the cooler hoses if rubber material from the hose remains on the tube fitting.
4. Allow any A/T fluid that remains in the cooler hoses to drain into the oil pan.

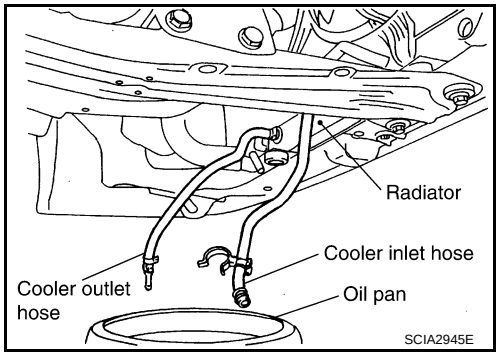

5. Insert the extension adapter hose of a can of Transmission Cooler Cleaner (Nissan P/N 999MP-AM006) into the cooler outlet hose.
   CAUTION:
   - **Wear safety glasses and rubber gloves when spraying the Transmission Cooler Cleaner.**
   - **Spray cooler cleaner only with adequate ventilation.**
   - **Avoid contact with eyes and skin.**
   - **Do not breath vapors or spray mist.**
6. Hold the hose and can as high as possible and spray Transmission Cooler Cleaner in a continuous stream into the cooler outlet hose until fluid flows out of the cooler inlet hose for 5 seconds.

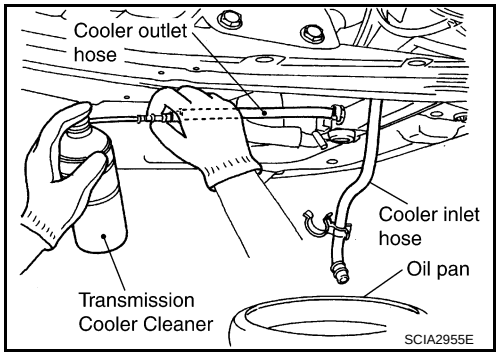

7. Insert the tip of an air gun into the end of the cooler outlet hose.
8. Wrap a shop rag around the air gun tip and of the cooler outlet hose.

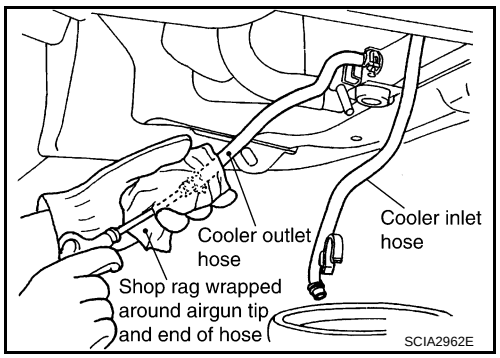

9. Blow compressed air regulated to 5 - 9 kg/cm^2 (70 - 130 psi) through the cooler outlet hose for 10 seconds to force out any remaining fluid.
10. Repeat steps 5 through 9 three additional times.
11. Position an oil pan under the banjo bolts that connect the fluid cooler steel lines to the transaxle.
12. Remove the banjo bolts.
13. Flush each steel line from the cooler side back toward the transaxle by spraying Transmission Cooler Cleaner in a continuous stream for 5 seconds.
14. Blow compressed air regulated to 5 - 9 kg/cm^2 (70 - 130 psi) through each steel line from the cooler side back toward the transaxle for 10 seconds to force out any remaining fluid.
15. Ensure all debris is removed from the steel cooler lines.
16. Ensure all debris is removed from the banjo bolts and fittings.
17. Perform "A/T FLUID COOLER DIAGNOSIS PROCEDURE".

A/T FLUID COOLER DIAGNOSIS PROCEDURE

NOTE:
Insufficient cleaning of the cooler inlet hose exterior may lead to inaccurate debris identification.

1. Position an oil pan under the automatic transaxle's inlet and outlet cooler hoses.
2. Clean the exterior and tip of the cooler inlet hose.

3. Insert the extension adapter hose of a can of Transmission Cooler Cleaner (Nissan P/N 999MP-AM006) into the cooler outlet hose.

CAUTION:
- **Wear safety glasses and rubber gloves when spraying the Transmission Cooler Cleaner.**
- **Spray cooler cleaner only with adequate ventilation.**
- **Avoid contact with eyes and skin.**
- **Do not breath vapors or spray mist.**

4. Hold the hose and can as high as possible and spray Transmission Cooler Cleaner in a continuous stream into the cooler outlet hose until fluid flows out of the cooler inlet hose for 5 seconds.

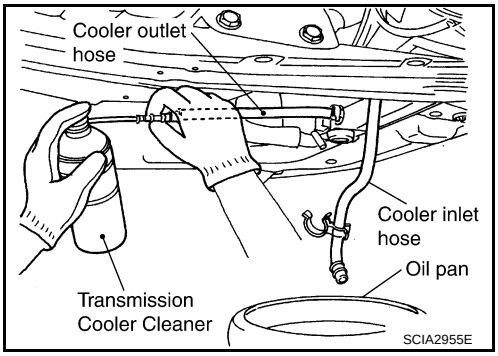

5. Tie a common white, basket-type coffee filter to the end of the cooler inlet hose.

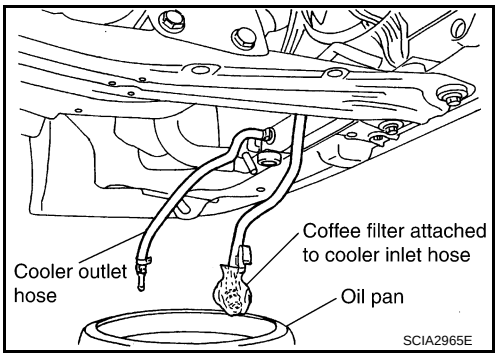

6. Insert the tip of an air gun into the end of the cooler outlet hose.
7. Wrap a shop rag around the air gun tip and end of cooler outlet hose.
8. Blow compressed air regulated to 5 - 9 kg/cm^2 (70 - 130 psi) through the cooler outlet hose to force any remaining A/T fluid into the coffee filter.
9. Remove the coffee filter from the end of the cooler inlet hose.
10. Perform "A/T FLUID COOLER INSPECTION PROCEDURE".

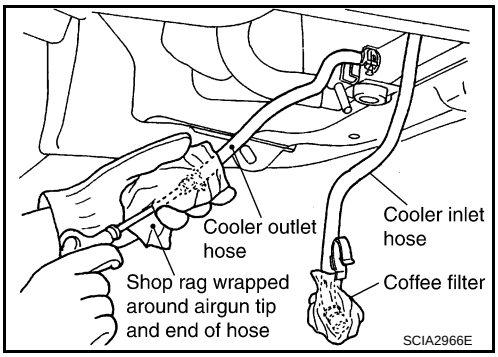

A/T FLUID COOLER INSPECTION PROCEDURE

1. Inspect the coffee filter for debris.

a. If small metal debris less than 1mm (0.040 in) in size or metal powder is found in the coffee filter, this is normal. If normal debris is found, the A/T fluid cooler/radiator can be re-used and the procedure is ended.

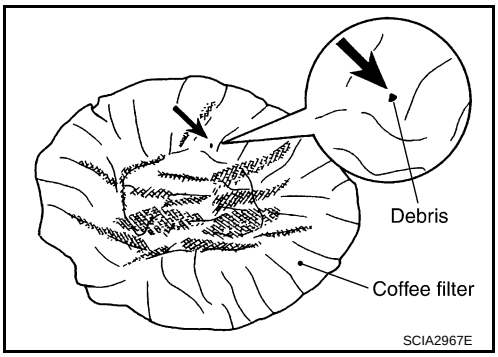

b. If one or more pieces of debris are found that are over 1mm (0.040in) in size and/or peeled clutch facing material is found in the coffee filter, the fluid cooler is not serviceable. The radiator/ fluid cooler must be replaced and the inspection procedure is ended.

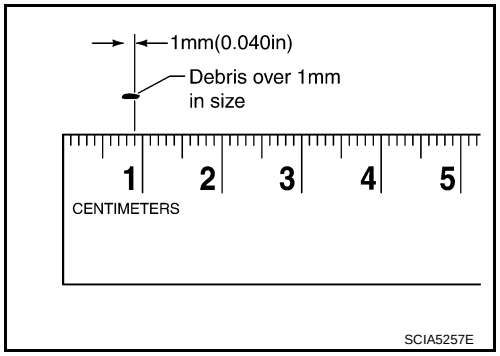

A/T FLUID COOLER FINAL INSPECTION

After performing all procedures, ensure that all remaining oil is cleaned from all components.

A/T CONTROL SYSTEM

Cross-Sectional View

INFOID:0000000001717849

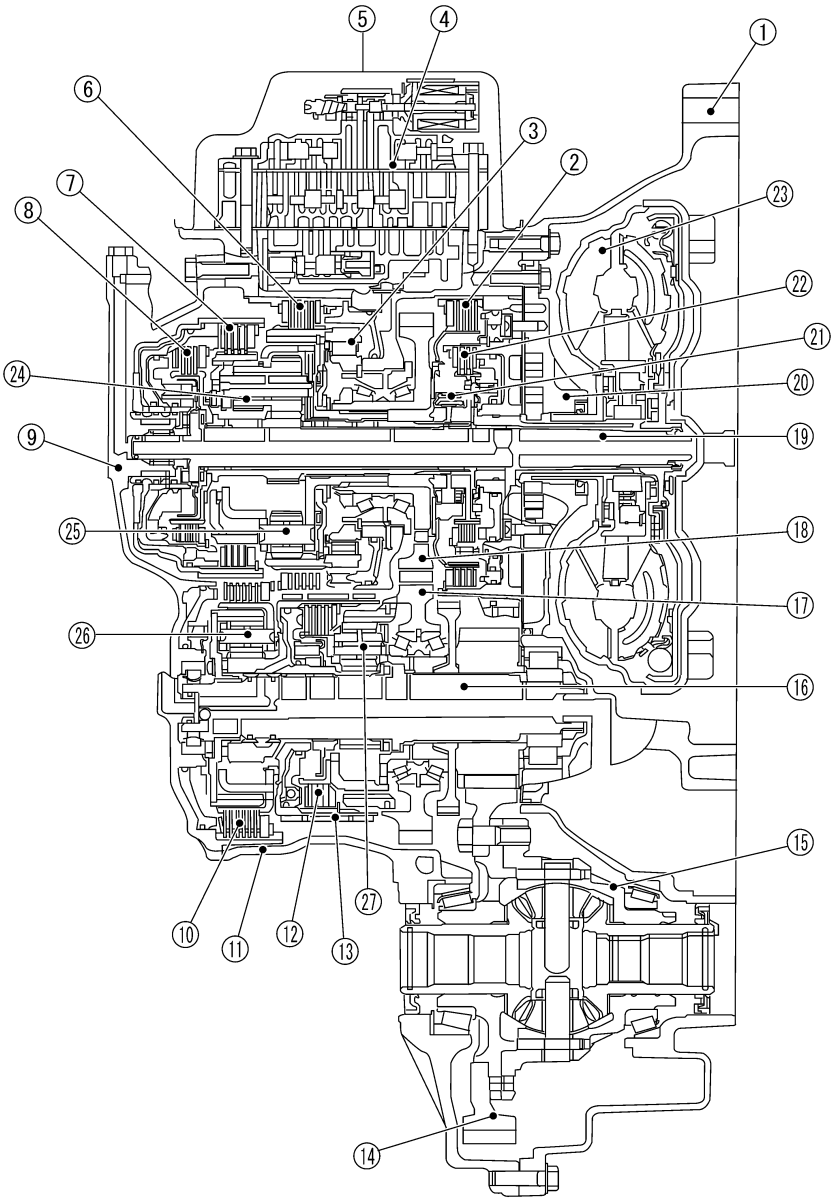

SCIA2575E

1. Converter housing	2. 2nd brake	3. One-way clutch No. 2
4. Control valve assembly	5. Side cover	6. 1st and reverse brake
7. Forward clutch	8. Direct clutch	9. Transaxle case cover
10. B5 brake	11. Transaxle case	12. U/D clutch
13. U/D brake	14. Final gear	15. Differential case
16. Output shaft	17. Counter driven gear	18. Counter drive gear
19. Input shaft	20. Oil pump	21. One-way clutch No. 1
22. 2nd coast brake	23. Torque converter	24. Main rear planetary gear
25. Main front planetary gear	26. U/D rear planetary gear	27. U/D front planetary gear

Shift Mechanism

INFOID:0000000001717850

CONSTRUCTION

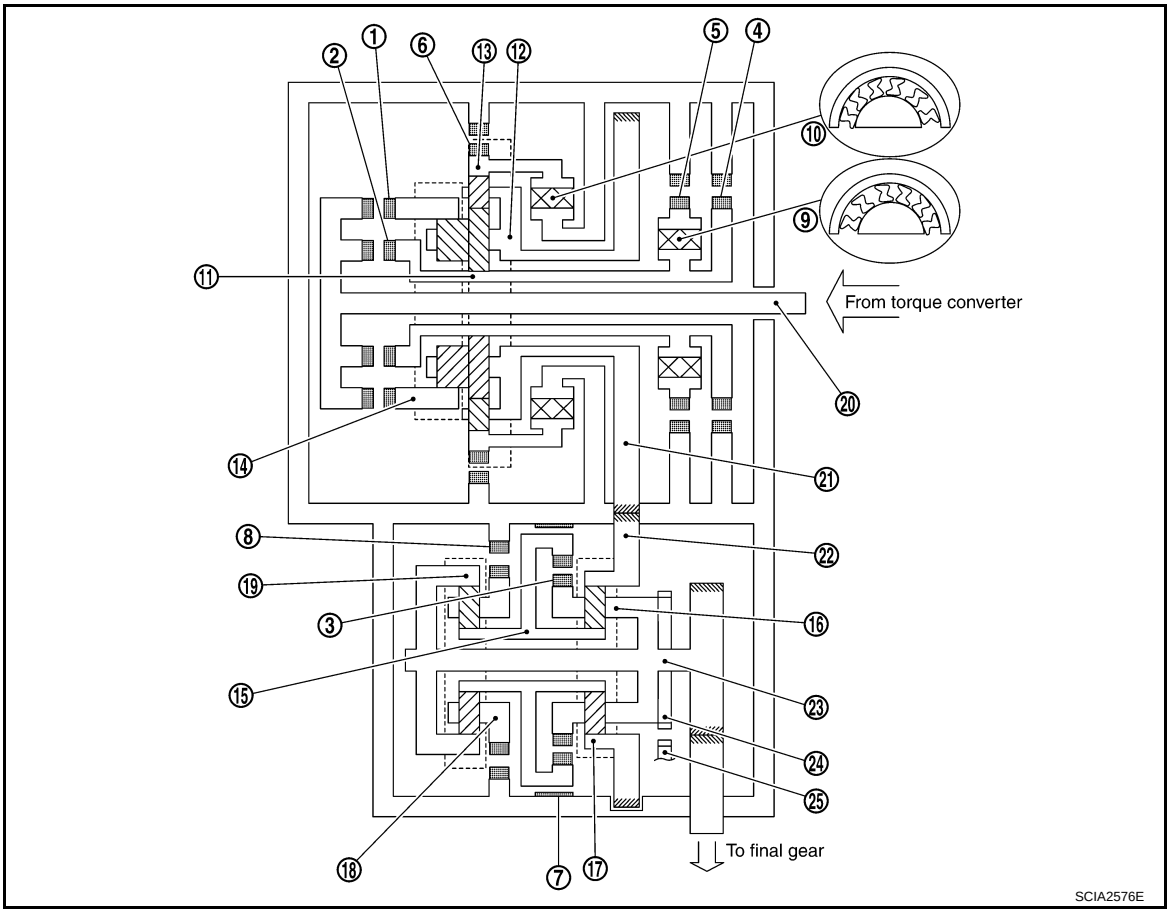

1. Forward clutch
2. Direct clutch
3. U/D clutch
4. 2nd coast brake
5. 2nd brake
6. 1st and reverse brake
7. U/D brake
8. B5 brake
9. One-way clutch No. 1
10. One-way clutch No. 2
11. Main sun gear
12. Main planetary carrier
13. Main front internal gear
14. Main rear internal gear
15. U/D sun gear
16. U/D front planetary carrier
17. U/D front internal gear
18. U/D rear planetary carrier
19. U/D rear internal gear
20. Input shaft
21. Counter drive gear
22. Counter driven gear
23. Output shaft
24. Parking gear
25. Parking pawl

FUNCTION OF CLUTCH AND BRAKE

Clutch and brake components	Abbr.	Function
Forward clutch **1**	F/C	Connect input shaft **20** to main rear internal gear **10**.
Direct clutch **2**	D/C	Connect input shaft **20** to main sun gear **11**.
U/D clutch **3**	U/D.C	Connect U/D sun gear **15** to U/D front planetary carrier **16**.
2nd coast brake **4**	2nd C/B	Lock main sun gear **11**.
2nd brake **5**	2nd/B	Lock counterclockwise rotation of main sun gear **11**.
1st and reverse brake **6**	1st & R/B	Lock main front internal gear **13**.
U/D brake **7**	U/D.B	Lock U/D sun gear **15**.
B5 brake **8**	B5/B	Lock U/D rear planetary carrier **18**.
One-way clutch No. 1 **9**	O.C1	Lock counterclockwise rotation of main sun gear **11**, when 2nd brake **5** operations.
One-way clutch No. 2 **10**	O.C2	Lock counterclockwise rotation of main front internal gear **13**.

CLUTCH AND BAND CHART

Shift position		Clutch			Brake					One-way clutch		Remarks
		F/C **1**	D/C **2**	U/D.C **3**	2nd C/B **4**	2nd/B **5**	1st & R/B **6**	U/D.B **7**	B5/B **8**	O.C1 **9**	O.C2 **10**	
P									○			PARK POSITION
R			○				○		○			REVERSE POSITION
N									○			NEUTRAL POSITION
D*1	1st	○							○		○	Automatic shift 1 ⇔ 2 ⇔ 3 ⇔ 4 ⇔ 5
	1 ⇔ 2	○			△	△			○	△	△	
	2nd	○			○	○			○	○		
	2 ⇔ 3	○			○	○		△	△	○		
	3rd	○			○	○		○		○		
	3 ⇔ 4	○		△	○	○		△		○		
	4th	○		○	○	○				○		
	4 ⇔ 5	○	△	○	△	○				△		
	5th	○	○	○		○						
L*2	1st	○							○		○	Automatic shift 1 ⇔ 2 ⇔ 3
	1 ⇔ 2	○			△	△			○	△	△	
	2nd	○			○	○			○	○		
	2 ⇔ 3	○			○	○		△	△	○		
	3rd	○			○	○		○		○		

○: Operates

△: In transition between applied and released.

*1: A/T will not shift to 5th when lever switch is pushed (indicated A/T indicator “4”).

*2: A/T will not shift to 3th when lever switch is pushed (indicated A/T indicator “2”).

NOTE:

When shifting D to L position or lever switch pushes (indicated A/T indicator “4” at D position or “2” at L position), down shift permission control is activated. Refer to AT-33, "Shift Control".

POWER TRANSMISSION

“N” position

Since both the forward clutch and the direct clutch are released, torque from the input shaft drive is not transmitted to the output shaft.

“P” position

- The same as for the “N” position, both the forward clutch and the direct clutch are released, so torque from the input shaft drive is not transmitted to the output shaft.
- The parking pole linked with the selector lever meshes with the parking gear and fastens the output shaft mechanically.

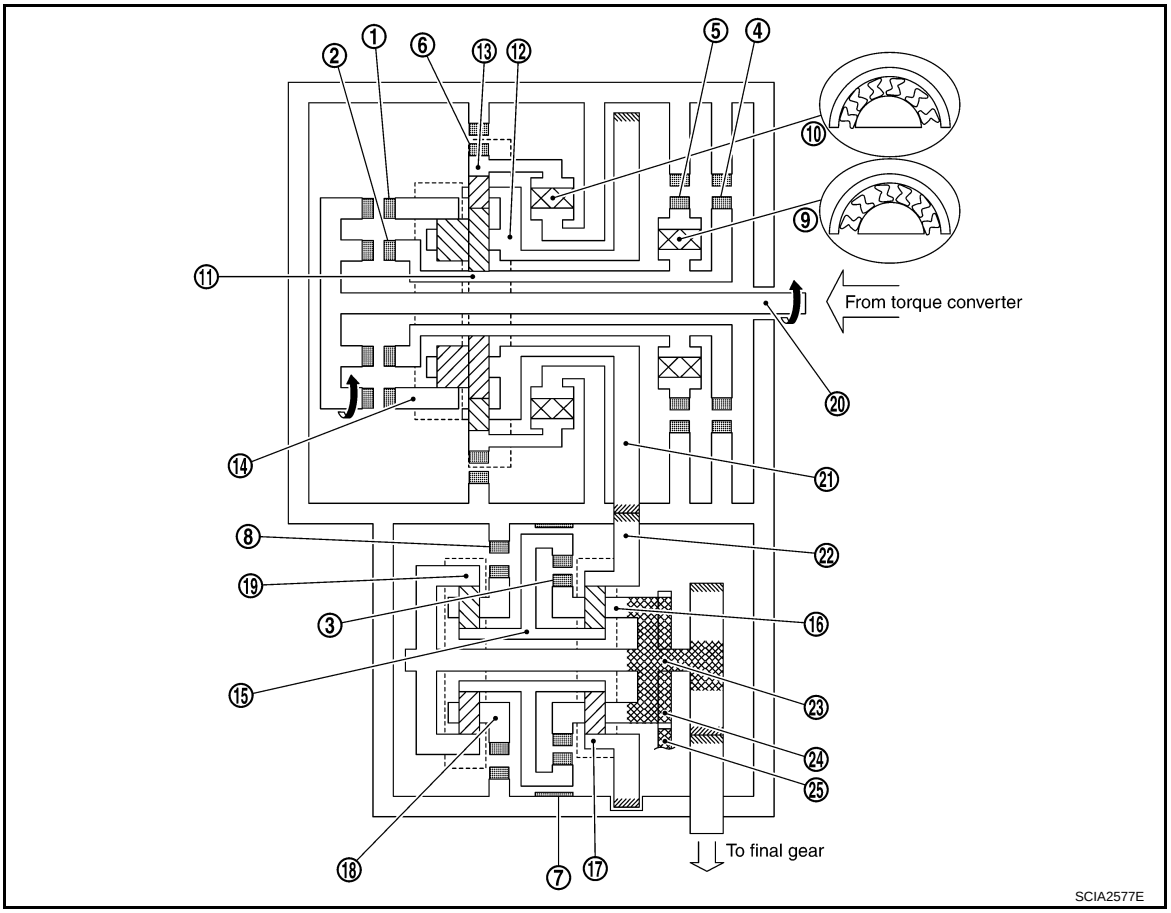

1. Forward clutch	2. Direct clutch	3. U/D clutch
4. 2nd coast brake	5. 2nd brake	6. 1st and reverse brake
7. U/D brake	8. B5 brake	9. One-way clutch No. 1
10. One-way clutch No. 2	11. Main sun gear	12. Main planetary carrier
13. Main front internal gear	14. Main rear internal gear	15. U/D sun gear
16. U/D front planetary carrier	17. U/D front internal gear	18. U/D rear planetary carrier
19. U/D rear internal gear	20. Input shaft	21. Counter drive gear
22. Counter driven gear	23. Output shaft	24. Parking gear
25. Parking pawl		

“D”, “L” positions 1st gear

1. Input shaft rotates clockwise.
2. Forward clutch operates. (Connect input shaft to main rear internal gear.)
3. Main rear internal gear rotates clockwise.
4. Main rear planetary pinion gear rotates itself clockwise.
5. Main front large planetary pinion gear rotates itself clockwise for rear planetary pinion and one.
6. Main front small planetary pinion gear rotates itself counterclockwise.
7. Main front internal gear is going to rotates counterclockwise.
8. One-way clutch No. 2 operates. (Lock counterclockwise rotation of main front internal gear.)
9. Main planetary carrier revolves clockwise due to reaction force of front small planetary pinion gear.
10. Counter drive gear rotates clockwise for main planetary carrier and one.
11. Counter driven gear rotates counterclockwise.
12. U/D front internal gear rotates counterclockwise for counter driven gear and one.
13. U/D front planetary pinion gear rotates itself counterclockwise.
14. U/D sun gear rotates clockwise.

15. U/D rear planetary pinion gear rotates itself counterclockwise.
16. B5 brake operate. (Lock rotation of U/D rear planetary carrier.)
17. U/D rear internal gear rotates counterclockwise.
18. U/D front planetary carrier and output shaft rotates counterclockwise for U/D rear internal gear and one.
19. Final gear clockwise.

- During deceleration, main front internal gear clockwise due to rotation itself clockwise of main front small planetary pinion gear, but driving force loses due to free of one-way clutch No. 2. Therefore, engine brake does not operate.

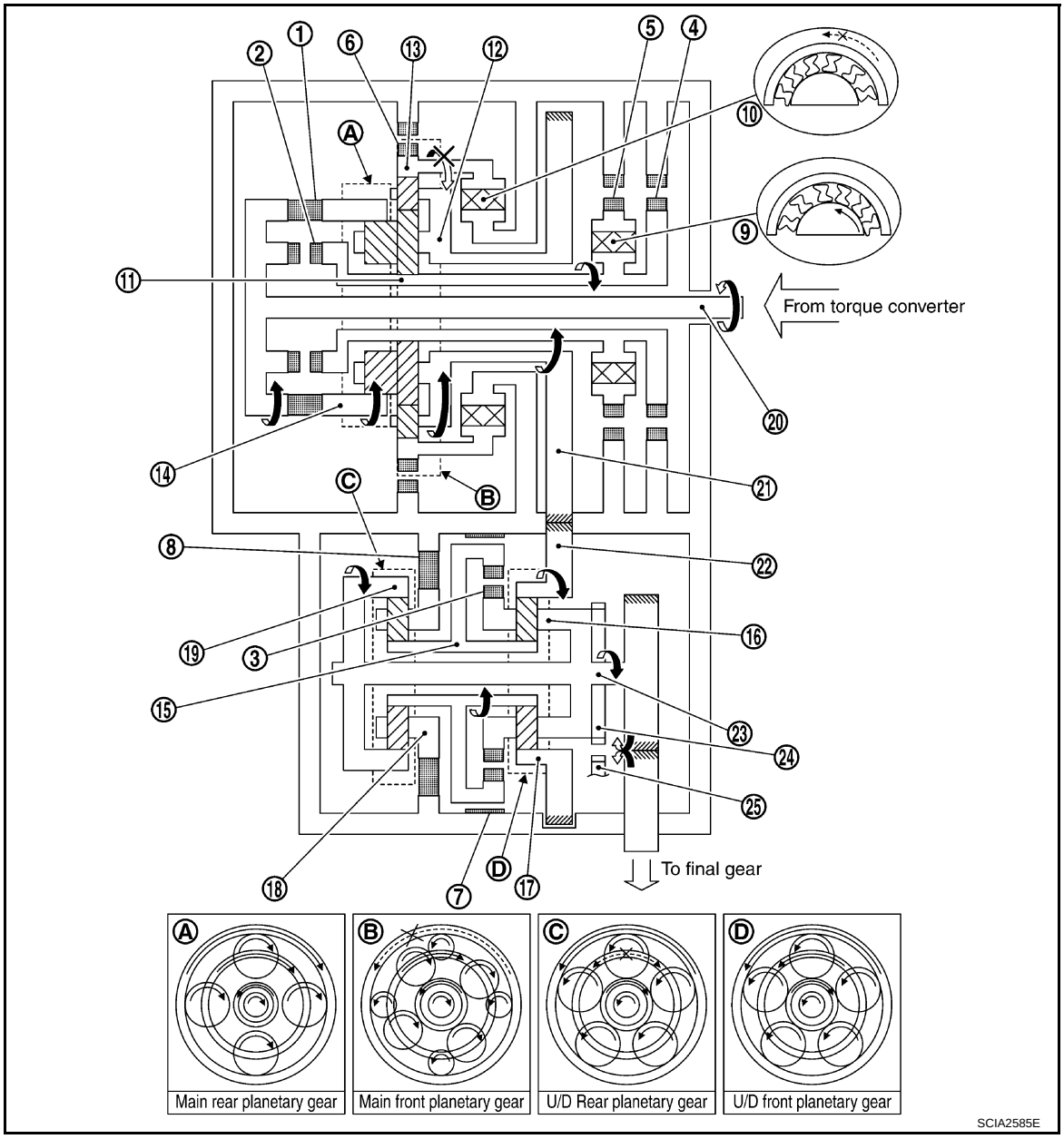

1. Forward clutch	2. Direct clutch	3. U/D clutch
4. 2nd coast brake	5. 2nd brake	6. 1st and reverse brake
7. U/D brake	8. B5 brake	9. One-way clutch No. 1
10. One-way clutch No. 2	11. Main sun gear	12. Main planetary carrier
13. Main front internal gear	14. Main rear internal gear	15. U/D sun gear
16. U/D front planetary carrier	17. U/D front internal gear	18. U/D rear planetary carrier
19. U/D rear internal gear	20. Input shaft	21. Counter drive gear

22. Counter driven gear
23. Output shaft
24. Parking gear
25. Parking pawl

“D”, “L” positions 2nd gear

1. Input shaft rotates clockwise.
2. Forward clutch operates. (Connect input shaft to main rear internal gear.)
3. Main rear internal gear rotates clockwise.
4. Main rear planetary pinion gear rotates itself clockwise.
5. Main front large planetary pinion gear rotates itself clockwise for rear planetary pinion and one.
6. 2nd brake and 2nd coast brake operates.
7. One-way clutch No. 1 operates. (Lock rotation of main sun gear.)
8. Main planetary carrier revolves clockwise due to reaction force of front large planetary pinion gear.
9. Counter drive gear rotates clockwise for main planetary carrier and one.
10. Counter driven gear rotates counterclockwise.
11. U/D front internal gear rotates counterclockwise for counter driven gear and one.
12. U/D front planetary pinion gear rotates itself counterclockwise.
13. U/D sun gear rotates clockwise.
14. U/D rear planetary pinion gear rotates itself counterclockwise.
15. B5 brake operate. (Lock rotation of U/D rear planetary carrier.)
16. U/D rear internal gear rotates counterclockwise.
17. U/D front planetary carrier and output shaft rotates counterclockwise for U/D rear internal gear and one.
18. Final gear clockwise.

- During deceleration, driving force is connected to input shaft directly without one-way clutch. Therefore, engine brake operates.

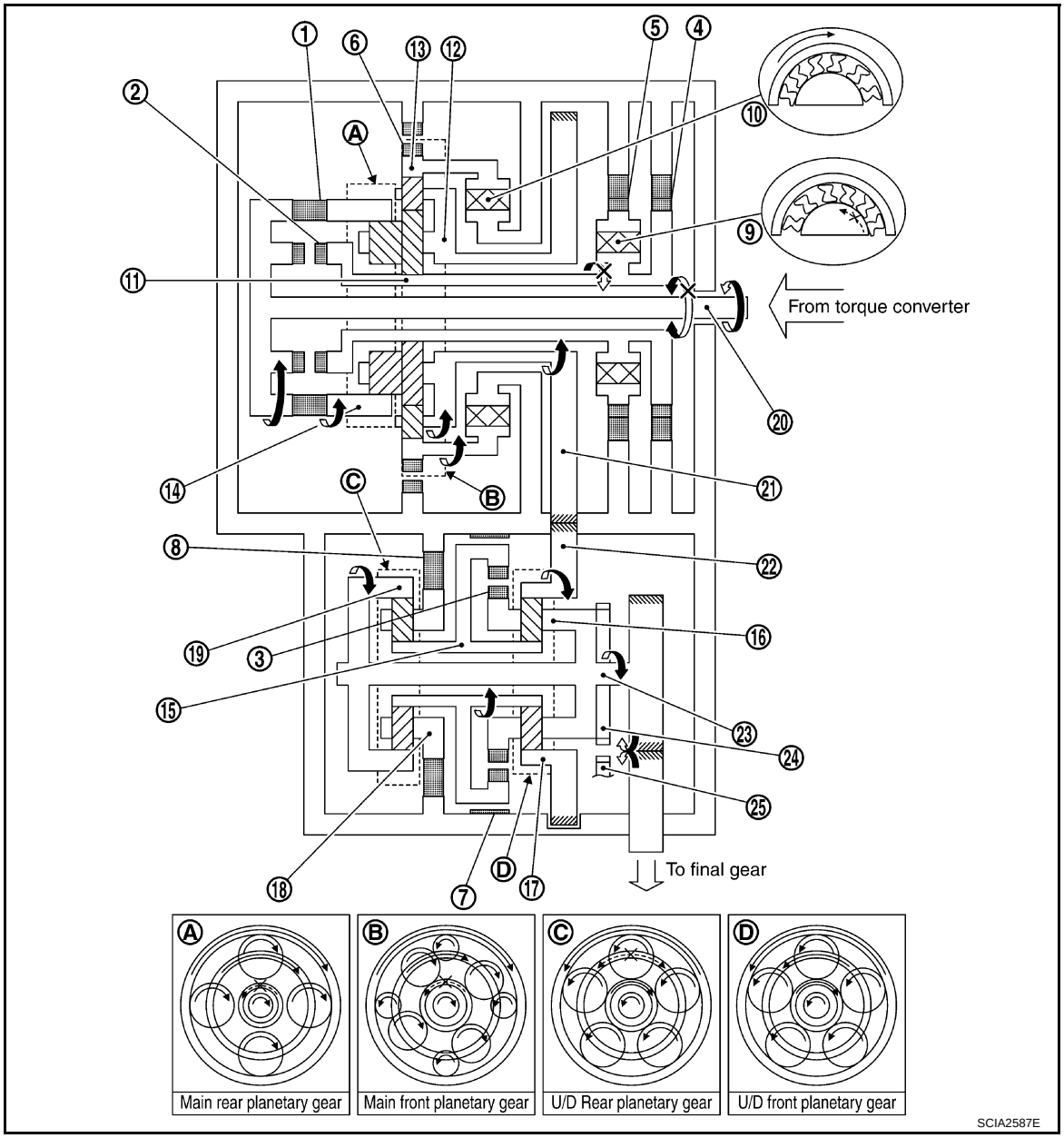

1. Forward clutch
2. Direct clutch
3. U/D clutch
4. 2nd coast brake
5. 2nd brake
6. 1st and reverse brake
7. U/D brake
8. B5 brake
9. One-way clutch No. 1
10. One-way clutch No. 2
11. Main sun gear
12. Main planetary carrier
13. Main front internal gear
14. Main rear internal gear
15. U/D sun gear
16. U/D front planetary carrier
17. U/D front internal gear
18. U/D rear planetary carrier
19. U/D rear internal gear
20. Input shaft
21. Counter drive gear
22. Counter driven gear
23. Output shaft
24. Parking gear
25. Parking pawl

“D”, “L” positions 3rd gear

1. Input shaft rotates clockwise.
2. Forward clutch operates. (Connect input shaft to main rear internal gear.)
3. Main rear internal gear rotates clockwise.
4. Main rear planetary pinion gear rotates itself clockwise.
5. Main front large planetary pinion gear rotates itself clockwise for rear planetary pinion and one.

6. 2nd brake and 2nd coast brake operates.
7. One-way clutch No. 1 operates. (Lock rotation of main sun gear.)
8. Main planetary carrier revolves clockwise due to reaction force of front large planetary pinion gear.
9. Counter drive gear rotates clockwise for main planetary carrier and one.
10. Counter driven gear rotates counterclockwise.
11. U/D front internal gear rotates counterclockwise for counter driven gear and one.
12. U/D front planetary pinion gear rotates itself counterclockwise.
13. U/D brake operate. (Lock rotation of U/D sun gear.)
14. U/D front planetary carrier revolves counterclockwise due to reaction force of U/D front planetary pinion gear.
15. U/D rear internal gear and output shaft rotates counterclockwise for U/D front planetary carrier and one.
16. Final gear clockwise.

- During deceleration, driving force is connected to input shaft directly without one-way clutch. Therefore, engine brake operates.

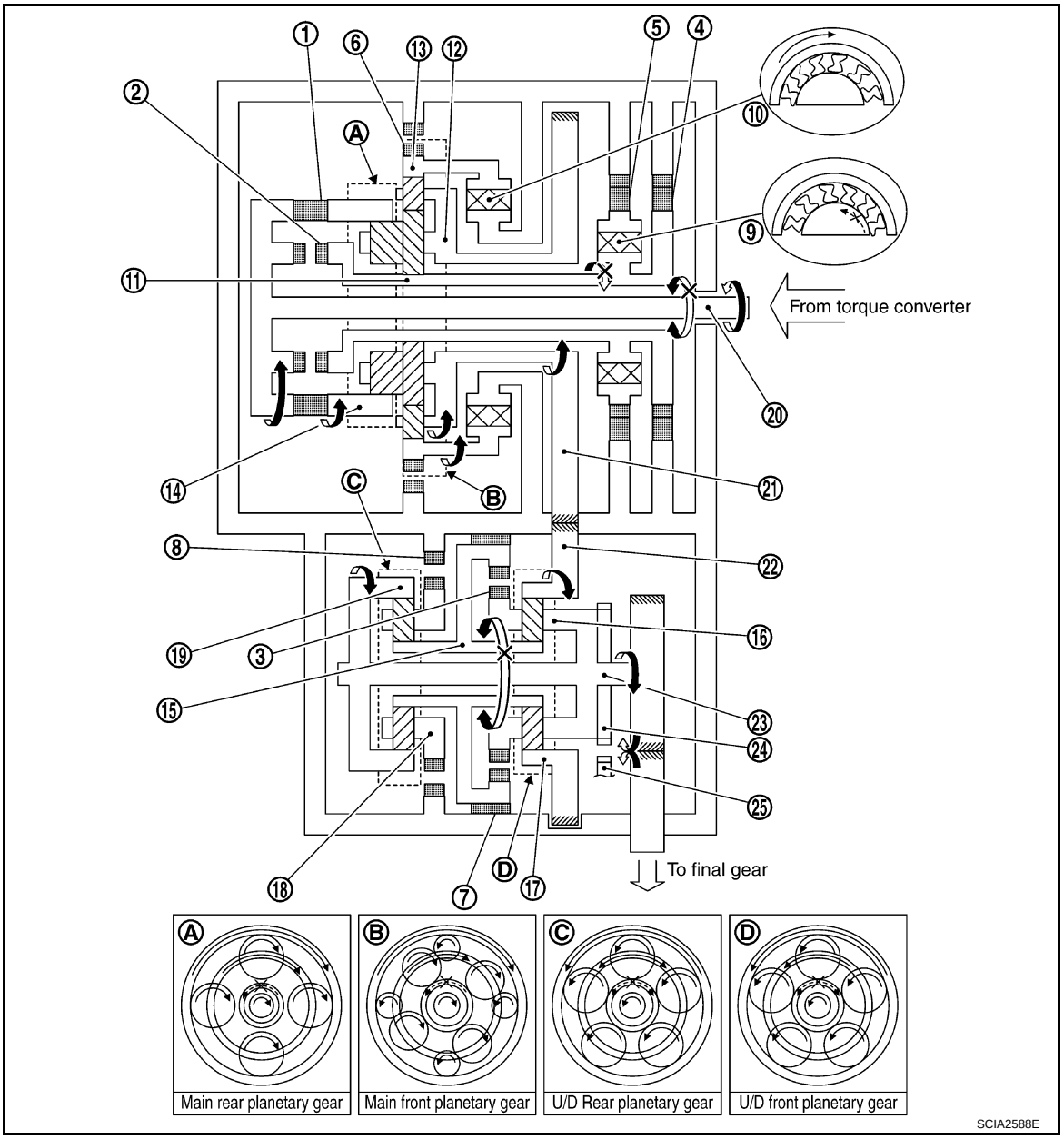

1. Forward clutch
2. Direct clutch
3. U/D clutch
4. 2nd coast brake
5. 2nd brake
6. 1st and reverse brake

7. U/D brake
8. B5 brake
9. One-way clutch No. 1
10. One-way clutch No. 2
11. Main sun gear
12. Main planetary carrier
13. Main front internal gear
14. Main rear internal gear
15. U/D sun gear
16. U/D front planetary carrier
17. U/D front internal gear
18. U/D rear planetary carrier
19. U/D rear internal gear
20. Input shaft
21. Counter drive gear
22. Counter driven gear
23. Output shaft
24. Parking gear
25. Parking pawl

“D” positions 4th gear

1. Input shaft rotates clockwise.
2. Forward clutch operates. (Connect input shaft to main rear internal gear.)
3. Main rear internal gear rotates clockwise.
4. Main rear planetary pinion gear rotates itself clockwise.
5. Main front large planetary pinion gear rotates itself clockwise for rear planetary pinion and one.
6. 2nd brake and 2nd coast brake operates.
7. One-way clutch No. 1 operates. (Lock rotation of main sun gear.)
8. Main planetary carrier revolves clockwise due to reaction force of front large planetary pinion gear.
9. Counter drive gear rotates clockwise for main planetary carrier and one.
10. Counter driven gear rotates counterclockwise.
11. U/D front internal gear rotates counterclockwise for counter driven gear and one.
12. U/D clutch operate. (Connect U/D sun gear to U/D front planetary carrier.)
13. U/D front planetary pinion gear cannot rotate itself, and U/D unit rotates counterclockwise as one.
14. Output shaft rotates counterclockwise for U/D unit and one.
15. Final gear clockwise.

- During deceleration, driving force is connected to input shaft directly without one-way clutch. Therefore, engine brake operates.

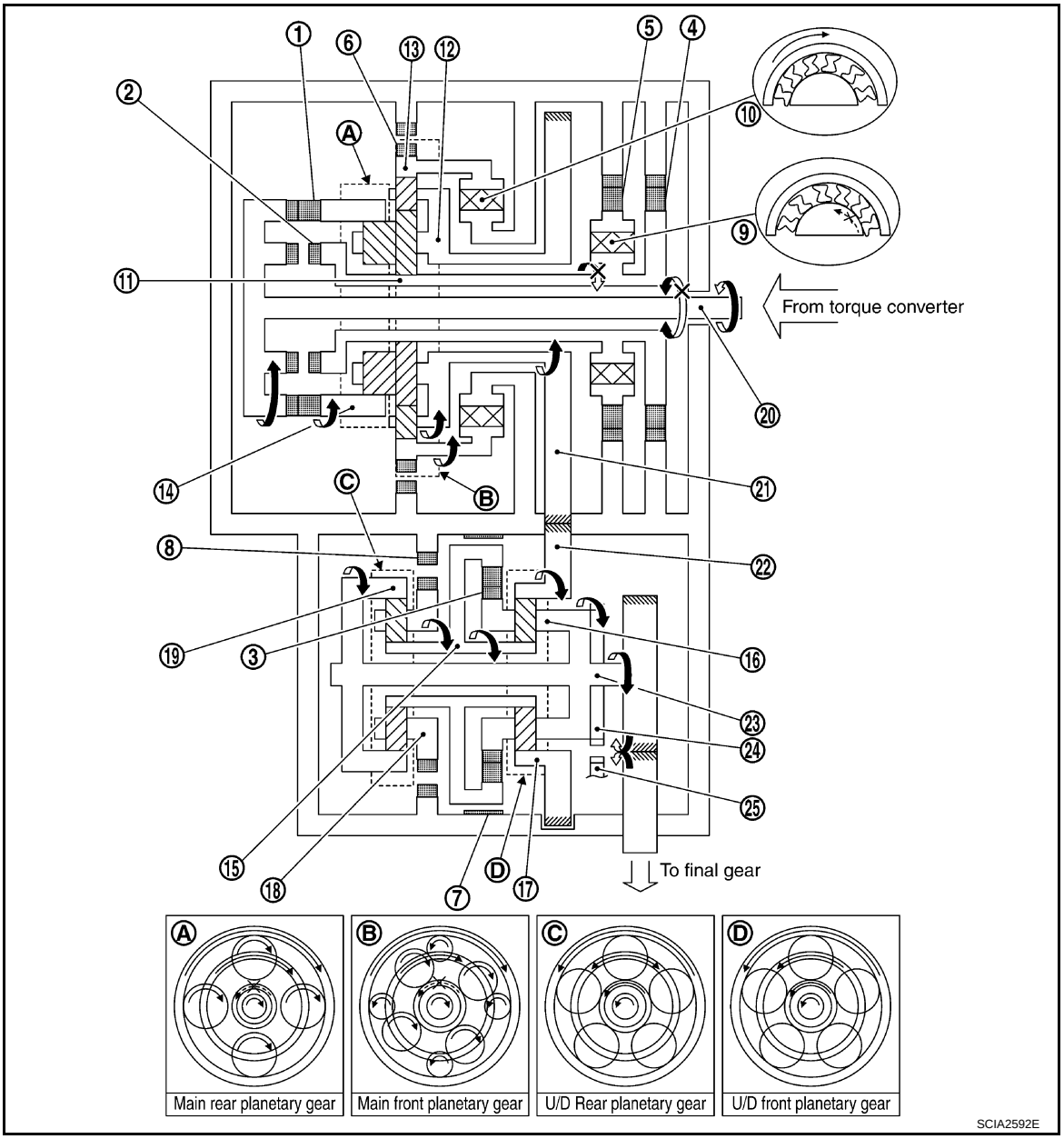

1. Forward clutch
2. Direct clutch
3. U/D clutch
4. 2nd coast brake
5. 2nd brake
6. 1st and reverse brake
7. U/D brake
8. B5 brake
9. One-way clutch No. 1
10. One-way clutch No. 2
11. Main sun gear
12. Main planetary carrier
13. Main front internal gear
14. Main rear internal gear
15. U/D sun gear
16. U/D front planetary carrier
17. U/D front internal gear
18. U/D rear planetary carrier
19. U/D rear internal gear
20. Input shaft
21. Counter drive gear
22. Counter driven gear
23. Output shaft
24. Parking gear
25. Parking pawl

"D" positions 5th gear

1. Input shaft rotates clockwise.
2. Forward clutch operates. (Connect input shaft to main rear internal gear.)
3. Direct clutch operates. (Connect input shaft to main sun gear.)
4. Main rear planetary pinion gear cannot rotate itself, and main rear planetary unit rotates clockwise as one.

5. Main front large planetary pinion gear cannot rotate itself for main rear planetary pinion gear and one, and main front planetary unit rotates clockwise as one.
6. Counter drive gear rotates clockwise for main front planetary unit and one.
7. Counter driven gear rotates counterclockwise.
8. U/D front internal gear rotates counterclockwise for counter driven gear and one.
9. U/D clutch operate. (Connect U/D sun gear to U/D front planetary carrier.)
10. U/D front planetary pinion gear cannot rotate itself, and U/D unit rotates counterclockwise as one.
11. Output shaft rotates counterclockwise for U/D unit and one.
12. Final gear clockwise.

- During deceleration, driving force is connected to input shaft directly without one-way clutch. Therefore, engine brake operates.

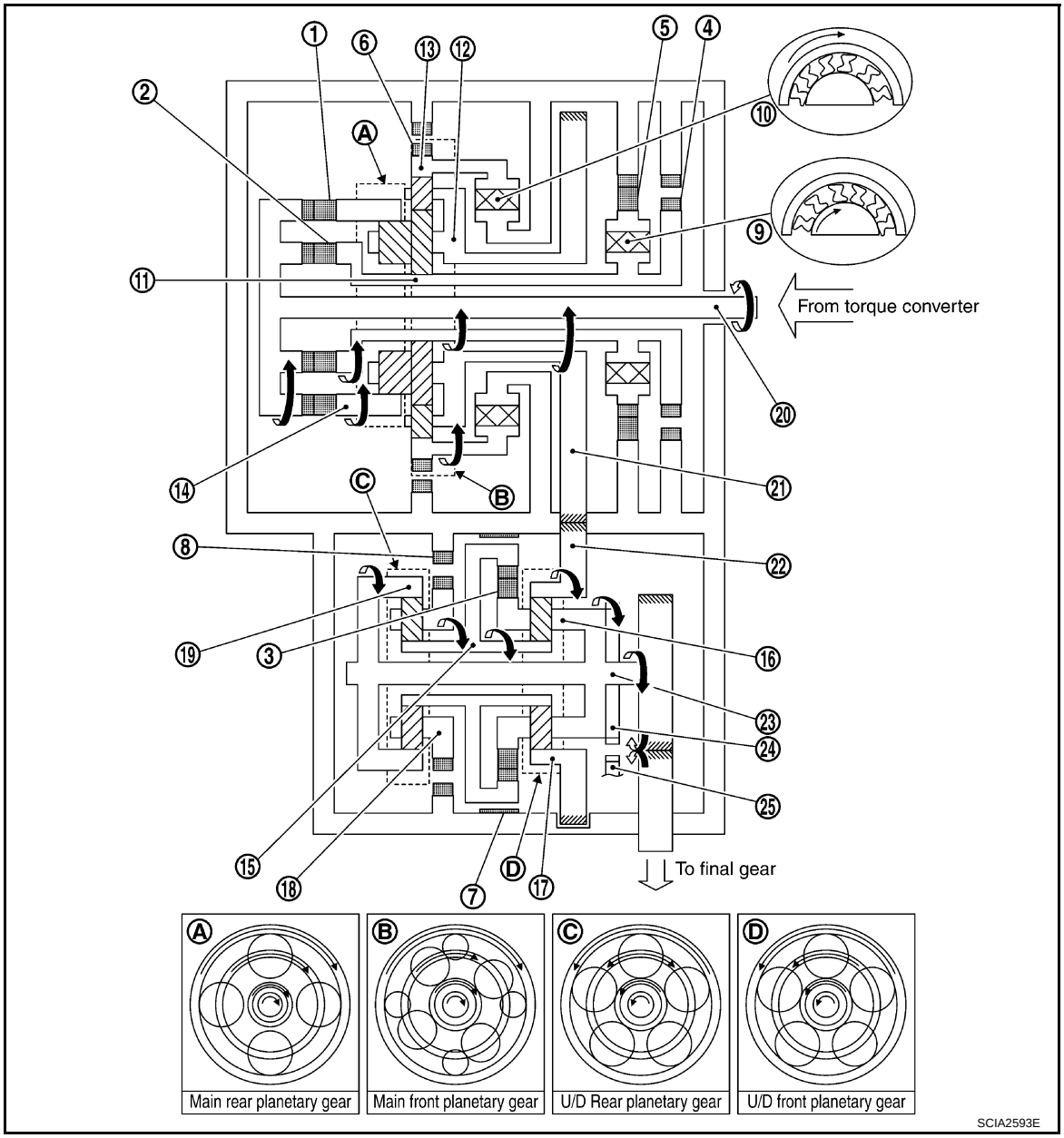

1. Forward clutch
2. Direct clutch
3. U/D clutch
4. 2nd coast brake
5. 2nd brake
6. 1st and reverse brake
7. U/D brake
8. B5 brake
9. One-way clutch No. 1
10. One-way clutch No. 2
11. Main sun gear
12. Main planetary carrier
13. Main front internal gear
14. Main rear internal gear
15. U/D sun gear

16. U/D front planetary carrier
17. U/D front internal gear
18. U/D rear planetary carrier
19. U/D rear internal gear
20. Input shaft
21. Counter drive gear
22. Counter driven gear
23. Output shaft
24. Parking gear
25. Parking pawl

“R” position

1. Input shaft rotates clockwise.
2. Direct clutch operates. (Connect input shaft to main sun gear.)
3. Main sun gear rotates clockwise.
4. Main rear planetary pinion gear rotates itself clockwise.
5. Main front large planetary pinion gear rotates itself counterclockwise for rear planetary pinion gear and one.
6. Main front small planetary pinion gear rotates itself clockwise.
7. 1st and reverse brake operates. (Lock rotation of main front internal gear.)
8. Main planetary carrier revolves counterclockwise due to reaction force of front small planetary pinion gear.
9. Counter drive gear rotates counterclockwise for main planetary carrier and one.
10. Counter driven gear rotates clockwise.
11. U/D front internal gear rotates clockwise for counter driven gear and one.
12. U/D front planetary pinion gear rotates itself clockwise.
13. U/D sun gear rotates counterclockwise.
14. U/D rear planetary pinion gear rotates itself clockwise.
15. B5 brake operate. (Lock rotation of U/D rear planetary carrier.)
16. U/D rear internal gear rotates clockwise.
17. U/D front planetary carrier and output shaft rotates clockwise for U/D rear internal gear and one.
18. Final gear counterclockwise.

- During deceleration, driving force is connected to input shaft directly without one-way clutch. Therefore, engine brake operates.

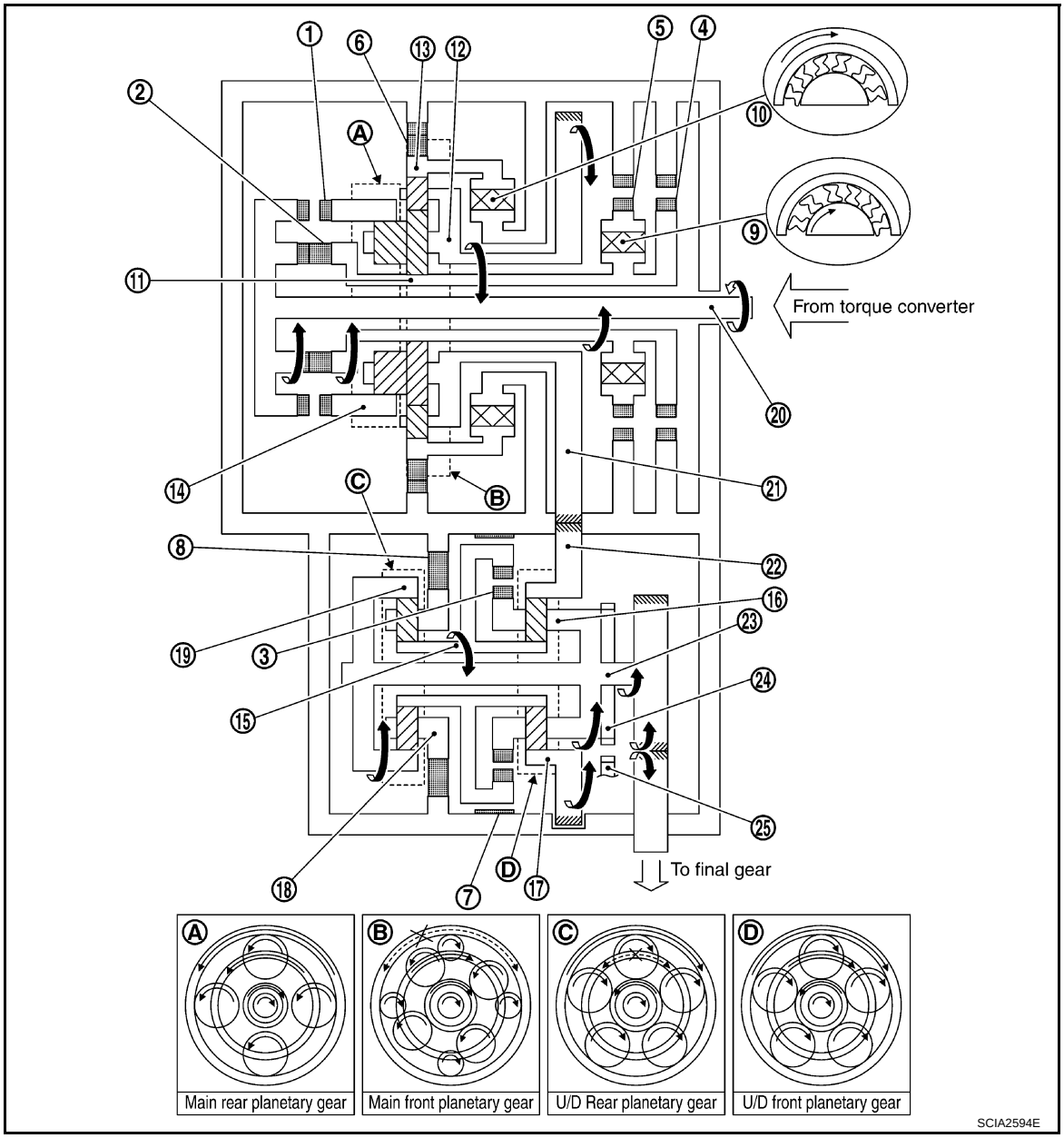

1. Forward clutch
2. Direct clutch
3. U/D clutch
4. 2nd coast brake
5. 2nd brake
6. 1st and reverse brake
7. U/D brake
8. B5 brake
9. One-way clutch No. 1
10. One-way clutch No. 2
11. Main sun gear
12. Main planetary carrier
13. Main front internal gear
14. Main rear internal gear
15. U/D sun gear
16. U/D front planetary carrier
17. U/D front internal gear
18. U/D rear planetary carrier
19. U/D rear internal gear
20. Input shaft
21. Counter drive gear
22. Counter driven gear
23. Output shaft
24. Parking gear
25. Parking pawl

TCM Function

INFOID:0000000001717851

The function of the TCM is to:
- Receive input signals sent from various switches and sensors.
- Determine required line pressure, shifting point, lock-up operation, and engine brake operation.
- Send required output signals to the respective solenoids.

CONTROL SYSTEM OUTLINE

The automatic transaxle senses vehicle operating conditions through various sensors or signals. It always controls the optimum shift position and reduces shifting and lock-up shocks.

SENSORS (or SIGNAL)		TCM		ACTUATORS
PNP switch Throttle angle signal Throttle position signal Engine speed signal Engine torque signal A/T fluid temperature sensor Revolution sensor Turbine revolution sensor Vehicle speed signal Lever switch signal Stop lamp switch signal	⇒	Shift control Line pressure control Lock-up control Engine brake control Timing control Fail-safe control Self-diagnosis CONSULT-III communication line CAN communication line On board diagnosis	⇒	Shift solenoid valve A Shift solenoid valve B Shift solenoid valve C Shift solenoid valve D Shift solenoid valve E Pressure control solenoid valve A Pressure control solenoid valve B Pressure control solenoid valve C O/D OFF indicator lamp

CONTROL SYSTEM DIAGRAM

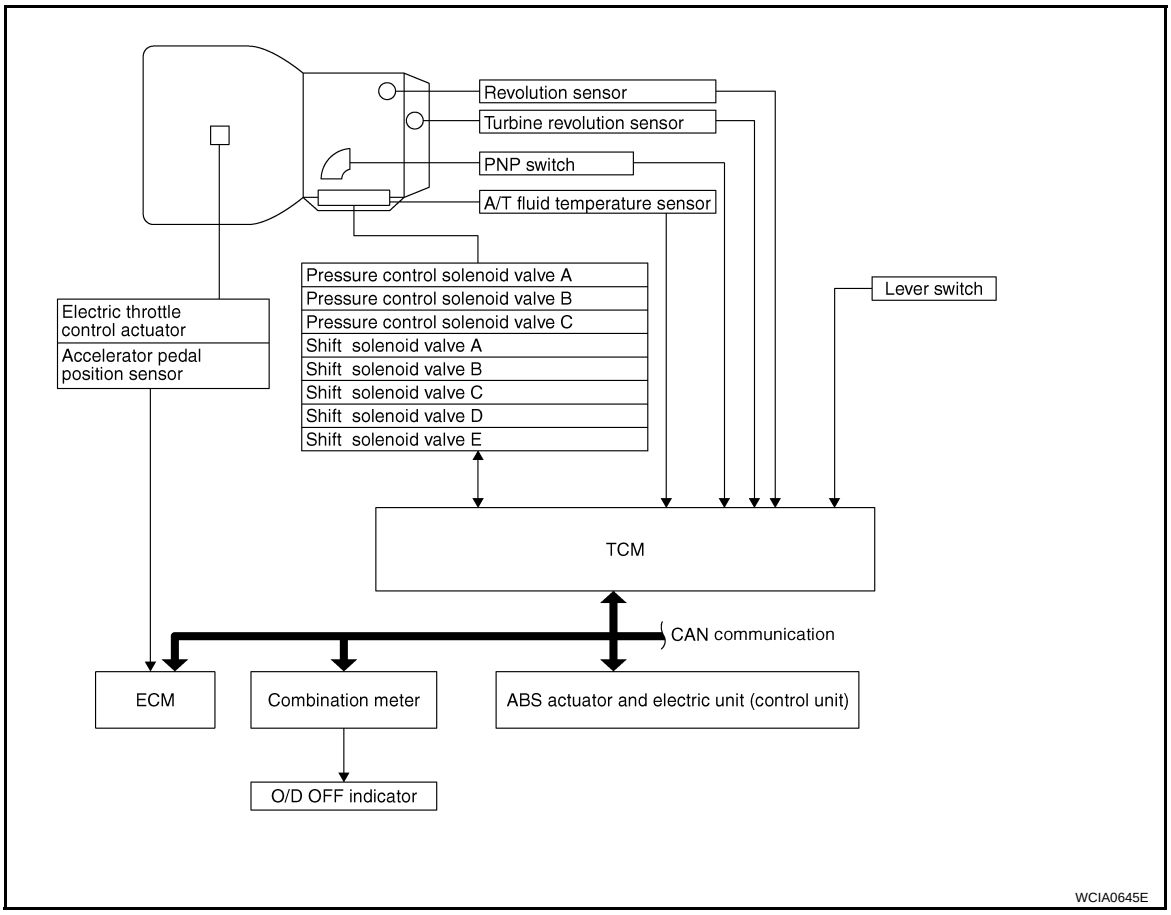

Input/Output Signal of TCM

INFOID:0000000001717852

Control item			Line pressure control	Vehicle speed control	Shift control	Lock-up control	Engine brake control	Fail-safe function (*3)	Self-diagnostics function
Input	Throttle angle signal(*5)		X	X	X	X	X	X	X
	Throttle position signal(*5)		X(*2)	X(*2)		X	X(*2)		X(*4)
	Revolution sensor		X	X	X	X	X	X	X
	Turbine revolution sensor		X	X	X		X	X	X
	Vehicle speed signal MTR(*1) (*5)		X	X	X	X		X	X
	Engine speed signals(*5)			X	X	X		X	X
	Engine torque signals(*5)		X	X	X	X	X		X
	PNP switch		X	X	X	X	X	X	X(*4)
	Lever switch			X	X		X	X	X
	Stop lamp switch signal(*5)			X		X	X		X(*4)
	A/T fluid temperature sensor			X	X	X	X	X	X
	ASCD	Operation signal(*5)		X		X	X		
		Overdrive cancel signal(*5)		X		X	X		
	TCM power supply voltage signal		X	X	X	X	X	X	X
Output	Shift solenoid valve A/B/C/D/E			X	X			X	X
	Pressure control solenoid valve A		X	X	X	X	X	X	X
	Pressure control solenoid valve B			X	X		X	X	X
	Pressure control solenoid valve C				X	X		X	X
	Self-diagnostics table(*5)								X

*1: Spare for revolution sensor

*2: Spare for throttle angle signal

*3: If these input and output signals are different, the TCM triggers the fail-safe function.

*4: Used as a condition for starting self-diagnostics; if self-diagnostics are not started, it is judged that there is some kind of error.

*5: CAN communications.

CAN Communication

INFOID:0000000001717853

SYSTEM DESCRIPTION

CAN (Controller Area Network) is a serial communication line for real time application. It is an on-vehicle multiplex communication line with high data communication speed and excellent error detection ability. Many electronic control units are equipped onto a vehicle, and each control unit shares information and links with other control units during operation (not independent). In CAN communication, control units are connected with 2 communication lines (CAN H line, CAN L line) allowing a high rate of information transmission with less wiring. Each control unit transmits/receives data but selectively reads required data only.
For details, refer to LAN-3, "CAN Communication System".

Line Pressure Control

INFOID:0000000001717854

- The pressure control solenoid A controls linear line pressure by control signal from TCM and line pressure for clutches and brakes to reduce shift shock.
- This pressure control solenoid A controls the pressure regulator valve as the signal pressure and adjusts the pressure of the operating oil discharged from the oil pump to the line pressure most appropriate to the driving state.

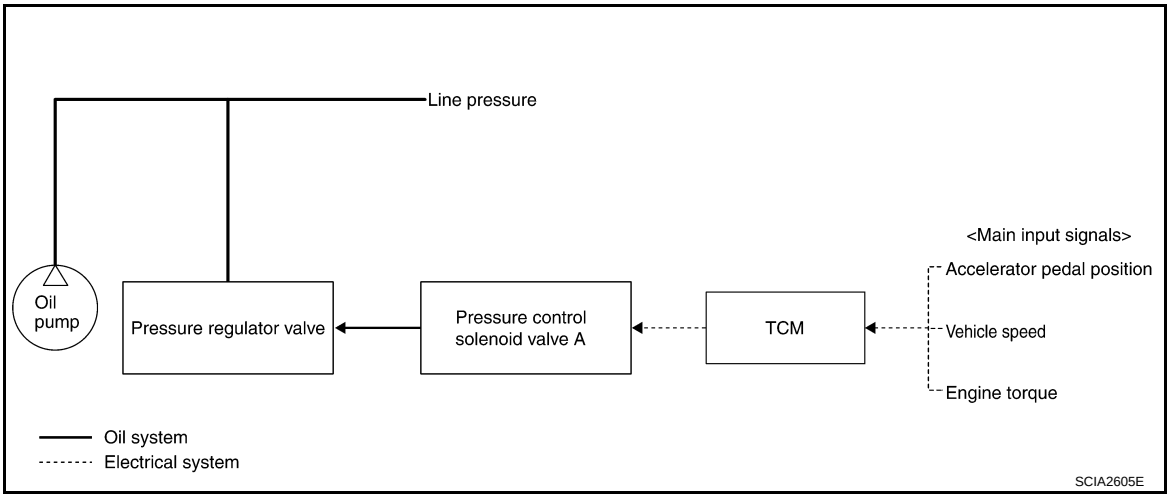

LINE PRESSURE CONTROL IS BASED ON THE TCM LINE PRESSURE CHARACTERISTIC PATTERN

In order to obtain the most appropriate line pressure characteristic to meet the current driving state, the TCM controls the pressure control solenoid A current valve and thus controls the line pressure.

Shift Control

INFOID:0000000001717855

The clutch pressure control solenoid is controlled by the signals from the switches and sensors. Thus, the clutch pressure is adjusted to be appropriate to the engine load state and vehicle driving state. It becomes possible to finely control the clutch hydraulic pressure with high precision and a smoother shift change characteristic is attained.

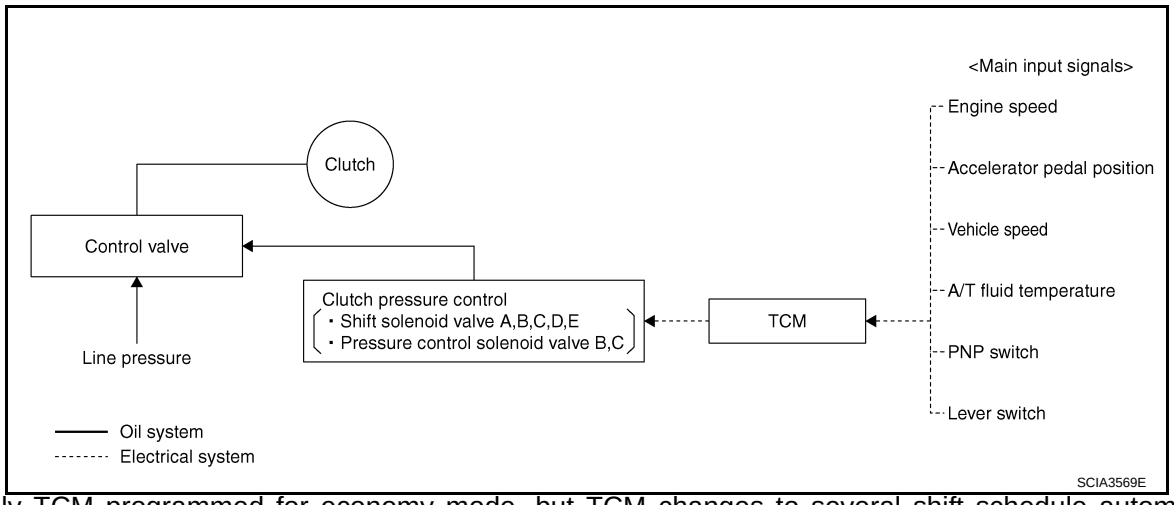

Basically TCM programmed for economy mode, but TCM changes to several shift schedule automatically according to specified condition.

SPECIAL SHIFT MODE

Upslope Mode

When TCM detects upslope from load of engine torque and decrease of acceleration, this mode changes shift points in high-speed side according to the upslope degree and avoids busy shift of A/T.

Downslope Mode

When TCM detects downslope from increase of acceleration with accelerator full close, this mode operates moderate engine brake by changing shift points in high-speed side.

Hot Mode Control

This control lowers ATF temperature by changing shift points when the temperature is extremely high.

Down Shift Permission Control

In order to avoid the over speed of the engine, down shift is done only at under a constant vehicle speed.

UP/DOWN SHIFT LEARNING CONTROL

This control learns the pressure to each clutch or brake in order to reduce shifting shock at each shifting (Up, Down, Coast down).

N-D SHIFT CONTROL

This control improves the N-D shift quality due to controlling line pressure solenoid valve according to forward clutch piston stroke learned in N-D shift learning control and applying best hydraulic pressure to forward clutch at N-D shift (include L).

N-D SHIFT LEARNING CONTROL

This control learns the forward clutch hydraulic pressure due to monitoring a forward clutch engaging time and a rotation change rate.

N-R SHIFT CONTROL

This control improves the N-R shift quality due to controlling shift pressure solenoid valve according to direct clutch piston stroke learned in N-R shift learning control and applying best hydraulic pressure to direct clutch at N-R shift.

N-R SHIFT LEARNING CONTROL

This control learns the direct clutch hydraulic pressure due to monitoring a direct clutch engaging time and a rotation change rate.

TORQUE REDUCTION CONTROL

This control improves the shift quality due to sending torque reduction request signal from TCM to ECM and cutting engine torque increase of shift at N-D shift, N-R shift and 1 ⇔ 2 ⇔ 3 ⇔ 4 ⇔ 5.
If accelerator pedal is depressed rapidly, this control establishes the upper limit value of engine torque and avoids engine flare at 2 ⇔ 3, 3 ⇔ 4 and 4 ⇒ 2 of clutch to clutch shift.

Lock-Up Control

INFOID:0000000001717856

The torque converter clutch piston in the torque converter is engaged to eliminate torque converter slip to increase power transmission efficiency.
The torque converter clutch control valve operation is controlled by the pressure control solenoid valve C, which is controlled by a signal from TCM, and the torque converter clutch control valve engages or releases the torque converter clutch piston.

Lock-up Operation Condition Table

Selector lever	D position			L position	
Lever switch (A/T indicator)	OFF (D)		ON (4)	OFF (3)	ON (2)
Gear position	5	4	4	3	2
Lock-up	×	–	×	×	–
Slip lock-up	×	×	×	–	–

TORQUE CONVERTER CLUTCH CONTROL VALVE CONTROL

Lock-up Control System Diagram

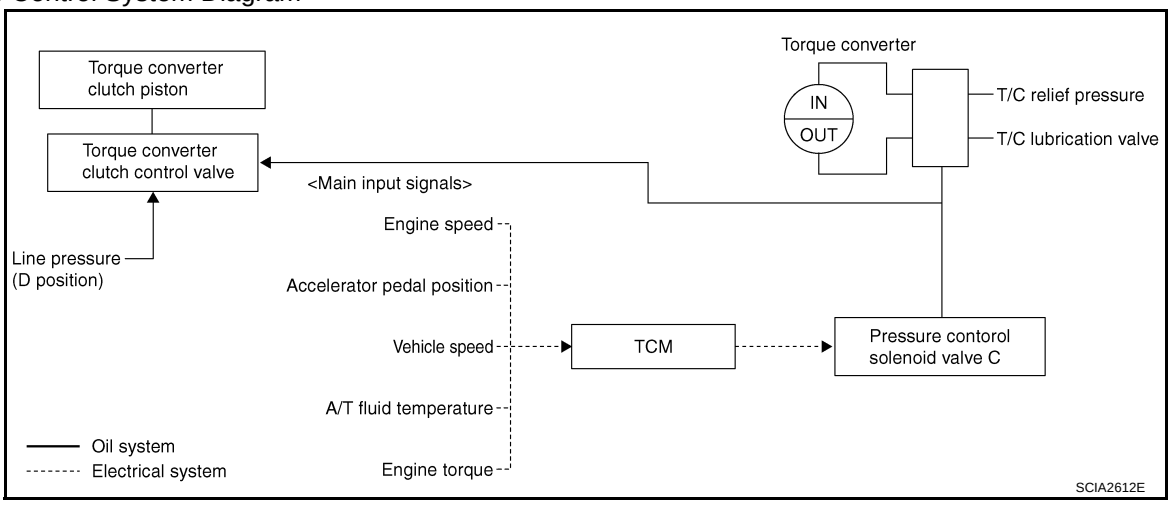

Lock-up Released

- In the lock-up released state, the torque converter clutch control valve is set into the unlocked state by the pressure control solenoid valve C and the lock-up apply pressure is drained.
  In this way, the torque converter clutch piston is not coupled.

Lock-up Applied

- In the lock-up applied state, the torque converter clutch control valve is set into the locked state by the pressure control solenoid valve C and lock-up apply pressure is generated.
  In this way, the torque converter clutch piston is pressed and coupled.

SMOOTH LOCK-UP CONTROL

When shifting from the lock-up released state to the lock-up applied state, the current output to the pressure control solenoid valve C is controlled with the TCM. In this way, when shifting to the lock-up applied state, the torque converter clutch is temporarily set to the half-clutched state to reduce the shock.

Half-Clutched State

- The current output from the TCM to the pressure control solenoid valve C is varied to steadily increase the pressure control solenoid valve C pressure.
  In this way, the lock-up apply pressure gradually rises and while the torque converter clutch piston is put into half-clutched status, the torque converter clutch piston operating pressure is increased and the coupling is completed smoothly.

Slip Lock-up Control

- In the slip region, the pressure control solenoid valve C current is controlled with the TCM to put it into the half-clutched state. This absorbs the engine torque fluctuation and lock-up operates from low speed.
  This raises the fuel efficiency for 4th and 5th gears at both low speed and when the accelerator has a low degree of opening.

ON BOARD DIAGNOSTIC (OBD) SYSTEM

Introduction

INFOID:0000000001717857

The A/T system has two self-diagnostic systems.
The first is the emission-related on board diagnostic system (OBD-II) performed by the TCM in combination with the ECM. The malfunction is indicated by the MIL (malfunction indicator lamp) and is stored as a DTC in the ECM memory but not the TCM memory.
The second is the TCM original self-diagnosis indicated by the O/D OFF indicator lamp. The malfunction is stored in the TCM memory. The detected items are overlapped with OBD-II self-diagnostic items. For detail, refer to AT-69, "CONSULT-III Function (TRANSMISSION)".

OBD-II Function for A/T System

INFOID:0000000001717858

The ECM provides emission-related on board diagnostic (OBD-II) functions for the A/T system. One function is to receive a signal from the TCM used with OBD-related parts of the A/T system. The signal is sent to the ECM when a malfunction occurs in the corresponding OBD-related part. The other function is to indicate a diagnostic result by means of the MIL (malfunction indicator lamp) on the instrument panel. Sensors, switches and solenoid valves are used as sensing elements.
The MIL automatically illuminates in One or Two Trip Detection Logic when a malfunction is sensed in relation to A/T system parts.

One or Two Trip Detection Logic of OBD-II

INFOID:0000000001717859

ONE TRIP DETECTION LOGIC

If a malfunction is sensed during the first test drive, the MIL will illuminate and the malfunction will be stored in the ECM memory as a DTC. The TCM is not provided with such a memory function.

TWO TRIP DETECTION LOGIC

When a malfunction is sensed during the first test drive, it is stored in the ECM memory as a 1st trip DTC (diagnostic trouble code) or 1st trip freeze frame data. At this point, the MIL will not illuminate. — 1st Trip
If the same malfunction as that experienced during the first test drive is sensed during the second test drive, the MIL will illuminate. — 2nd Trip
The “trip” in the “One or Two Trip Detection Logic” means a driving mode in which self-diagnosis is performed during vehicle operation.

OBD-II Diagnostic Trouble Code (DTC)

INFOID:0000000001717860

HOW TO READ DTC AND 1ST TRIP DTC

DTC and 1st trip DTC can be read by the following methods.
(with CONSULT-III or GST) CONSULT-III or GST (Generic Scan Tool) Examples: P0705, P0710 etc.
These DTC are prescribed by SAE J2012.
(CONSULT-III also displays the malfunctioning component or system.)

- **1st trip DTC No. is the same as DTC No.**
- **Output of the diagnostic trouble code indicates that the indicated circuit has a malfunction. However, in case of the Mode II and GST, they do not indicate whether the malfunction is still occurring or occurred in the past and returned to normal.**
  CONSULT-III can identify them as shown below, therefore, CONSULT-III (if available) is recommended.

A sample of CONSULT-III display for DTC and 1st trip DTC is shown on the next page. DTC or 1st trip DTC of a malfunction is displayed in SELF-DIAGNOSTIC RESULTS mode for “ENGINE” with CONSULT-III. Time data indicates how many times the vehicle was driven after the last detection of a DTC. If the DTC is being detected currently, the time data will be “0”. If a 1st trip DTC is stored in the ECM, the time data will be “1t”.

Freeze Frame Data and 1st Trip Freeze Frame Data

The ECM has a memory function, which stores the driving condition such as fuel system status, calculated load value, engine coolant temperature, short term fuel trim, long term fuel trim, engine speed and vehicle speed at the moment the ECM detects a malfunction.
Data which are stored in the ECM memory, along with the 1st trip DTC, are called 1st trip freeze frame data, and the data, stored together with the DTC data, are called freeze frame data and displayed on CONSULT-III or GST. The 1st trip freeze frame data can only be displayed on the CONSULT-III screen, not on the GST. For detail, refer to EC-43, "Emission-related Diagnostic Information".

Only one set of freeze frame data (either 1st trip freeze frame data of freeze frame data) can be stored in the ECM. 1st trip freeze frame data is stored in the ECM memory along with the 1st trip DTC. There is no priority for 1st trip freeze frame data and it is updated each time a different 1st trip DTC is detected. However, once freeze frame data (2nd trip detection/MIL on) is stored in the ECM memory, 1st trip freeze frame data is no longer stored. Remember, only one set of freeze frame data can be stored in the ECM. The ECM has the following priorities to update the data.

Priority	Items	
1	Freeze frame data	Misfire — DTC: P0300 - P0306 Fuel Injection System Function — DTC: P0171, P0172, P0174, P0175
2		Except the above items (Includes A/T related items)
3	1st trip freeze frame data	

Both 1st trip freeze frame data and freeze frame data (along with the DTC) are cleared when the ECM memory is erased.

HOW TO ERASE DTC

The diagnostic trouble code can be erased by CONSULT-III, GST or ECM DIAGNOSTIC TEST MODE as described following.

- **If the battery cable is disconnected, the diagnostic trouble code will be lost within 24 hours.**
- **When you erase the DTC, using CONSULT-III or GST is easier and quicker than switching the mode selector on the ECM.**

The following emission-related diagnostic information is cleared from the ECM memory when erasing DTC related to OBD-II. For details, refer to EC-43, "Emission-related Diagnostic Information".

- **Diagnostic trouble codes (DTC)**
- **1st trip diagnostic trouble codes (1st trip DTC)**
- **Freeze frame data**
- **1st trip freeze frame data**
- **System readiness test (SRT) codes**
- **Test values**

How to erase DTC (with CONSULT-III)

- **If a DTC is displayed for both ECM and TCM, it is necessary to be erased for both ECM and TCM.**

1. If the ignition switch stays “ON” after repair work, be sure to turn ignition switch “OFF” once. Wait at least 10 seconds and then turn it “ON” (engine stopped) again.
2. Turn CONSULT-III “ON” and touch “TRANSMISSION”.
3. Touch “SELF-DIAG RESULTS”.
4. Touch “ERASE”. (The DTC in the TCM will be erased.) Then touch “BACK” twice.
5. Touch “ENGINE”.
6. Touch “SELF-DIAG RESULTS”.
7. Touch “ERASE”. (The DTC in the ECM will be erased.)

How to erase DTC (with GST)

1. If the ignition switch stays “ON” after repair work, be sure to turn ignition switch “OFF” once. Wait at least 10 seconds and then turn it “ON” (engine stopped) again.
2. Erase DTC with TCM. Refer to AT-74, "Diagnosis Procedure". (The engine warm-up step can be skipped when performing the diagnosis only to erase the DTC.)
3. Select Mode 4 with Generic Scan Tool (GST). For details, refer to EC-117, "Generic Scan Tool (GST) Function".

How to erase DTC (no tools)

The O/D OFF indicator lamp is located on the instrument panel.

1. If the ignition switch stays “ON” after repair work, be sure to turn ignition switch “OFF” once. Wait at least 10 seconds and then turn it “ON” (engine stopped) again.
2. Erase DTC with TCM. Refer to AT-74, "Diagnosis Procedure". (The engine warm-up step can be skipped when performing the diagnosis only to erase the DTC.)
3. Erase DTC with ECM. Refer to EC-43, "Emission-related Diagnostic Information".

Malfunction Indicator Lamp (MIL)

INFOID:0000000001717861

DESCRIPTION

The MIL is located on the instrument panel.

1. The MIL will light up when the ignition switch is turned “ON” without the engine running. This is a bulb check.

- If the MIL does not light up, refer to DI-23, or see EC-616.

2. When the engine is started, the MIL should go off.
   If the MIL remains on, the on board diagnostic system has detected an engine system malfunction.

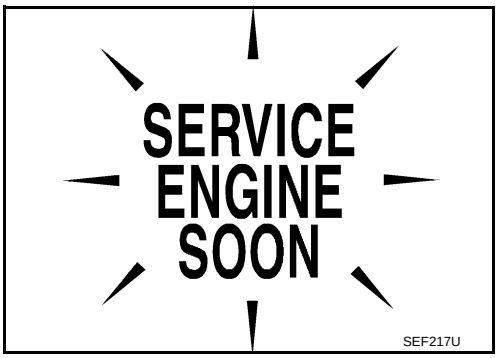

TROUBLE DIAGNOSIS

DTC Inspection Priority Chart

INFOID:0000000001717862

If some DTCs are displayed at the same time, perform inspections one by one based on the following priority chart.

NOTE:

If DTC U1000 is displayed with other DTCs, first perform the trouble diagnosis for DTC U1000. Refer to AT-77.

Priority	Detected items (DTC)
1	U1000 CAN communication line
2	Except above

Fail-Safe

INFOID:0000000001717863

The TCM has an electrical fail-safe mode. This mode makes it possible to operate even if there is a malfunction in a main electronic control input/output signal circuit.

In fail-safe mode, a driving condition is selected according to the malfunctioning location, and line pressure is set at the maximum. For this reason, the customer will be subjected to uncomfortable “slipping” or “poor acceleration” of the vehicle.

In that case, handle according to the “diagnostics flow” (Refer to AT-41).

FAIL-SAFE FUNCTION

If any malfunction occurs in a sensor or solenoid, this function controls the A/T to make driving possible.

NOTE:

Line pressure is set at the maximum in fail-safe mode. Although gear position differs depending on the type of fail-safe modes, CONSULT-III indicates “5th”.

DTC	Malfunction items	Fail-safe*
P0500	Vehicle speed signal	No learning control.
P0613	TCM processor	Fail-safe mode 4
P0705	PNP switch	Fail-safe mode 4
P0710	ATF temperature sensor circuit	Sets ATF temperature data at 111°C (232°F) after 15 minutes. Inhibits lock-up control.
P0711	ATF temperature sensor function	Sets ATF temperature data at 111°C (232°F) after 15 minutes. Inhibits lock-up control.
P0717	Turbine revolution sensor	Fail-safe mode 1
P0722	Revolution sensor	Uses vehicle speed signal from combination meter as a substitute. Inhibits learning control.
P0726	Engine speed signal input circuit performance	Fail-safe mode 1
P0731	1st gear function	No 1st gear, no control for N-D shift.
P0732	2nd gear function	Fail-safe mode 1. Also, ECM restricts engine torque to prevent clutch slipping.
P0733	3rd gear function	Fail-safe mode 1. Also, ECM restricts engine torque to prevent clutch slipping.
P0734	4th gear function	Fail-safe mode 1. Also, ECM restricts engine torque to prevent clutch slipping.
P0735	5th gear function	Fail-safe mode 1. Also, ECM restricts engine torque to prevent clutch slipping.
P0744	Lock-up function	Fail-safe mode 1
P0745	Pressure control solenoid valve A	Fail-safe mode 1. Also, ECM restricts engine torque to prevent clutch slipping.

DTC	Malfunction items	Fail-safe*
P0750	Shift solenoid valve A	Any one of fail-safe modes • Fail-safe mode 1 • Fail-safe mode 7. Also, ECM restricts input torque to prevent clutch slipping.
P0755	Shift solenoid valve B	Any one of fail-safe modes • Fail-safe mode 1 • Fail-safe mode 8
P0760	Shift solenoid valve C	Any one of fail-safe modes • Fail-safe mode 2 • Fail-safe mode 5 • Fail-safe mode 9
P0762	Shift solenoid valve C stuck ON	Fail-safe mode 2. Also, ECM restricts engine torque to prevent clutch slipping.
P0765	Shift solenoid valve D	Any one of fail-safe modes • Fail-safe mode 1 • Fail-safe mode 10. Also, ECM restricts input torque to prevent clutch slipping.
P0770	Shift solenoid valve E	Any one of fail-safe modes • Fail-safe mode 1. Also, ECM restricts engine torque to prevent clutch slipping. • Fail-safe mode 6. Also, ECM restricts engine torque to prevent clutch slipping.
P0775	Pressure control solenoid valve B	Fail-safe mode 3
P0780	Shift function	Fail-safe mode 1. Also, ECM restricts input torque to prevent clutch slipping.
P0795	Pressure control solenoid valve C	Fail-safe mode 1
P0797	Pressure control solenoid valve C stuck ON	Fail-safe mode 1
P0825	Lever switch	No lever switch control.
P0882	TCM power input signal	Fail-safe mode 1
P1726	Electric throttle control	• The accelerator opening angle is controlled by ECM according to a predetermined accelerator angle to make driving possible. • No lock-up, no learning control.
U1000	CAN communication circuit	Any one of fail-safe modes • Fail-safe mode 1 • Fail-safe mode 1. Also, ECM restricts engine torque to prevent clutch slipping. • No learning control. • No lock-up, no learning control, no special shift mode control.

*: For fail-safe modes 1 to 10, refer to "Fail-safe mode list".

Fail-safe mode list

Fail-safe mode	Selector lever	Gear position*1	Shift solenoid valve					Pressure control solenoid valve		
			A	B	C	D	E	A	B	C
Fail-safe mode 1	D position	4th	OFF	OFF	OFF	OFF	OFF	OFF	OFF	OFF
	L position	2nd	OFF	OFF	ON	OFF	OFF	OFF	OFF	OFF
	R position	Reverse	OFF	OFF	OFF	OFF	ON	OFF	OFF	OFF
Fail-safe mode 2 (CONSULT-III displays “8”)	D position	3rd	OFF	OFF	ON	ON	OFF	OFF	OFF	OFF
	L position	2nd	OFF	OFF	ON	OFF	OFF	OFF	OFF	OFF
	R position	Reverse	OFF	OFF	ON	OFF	ON	OFF	OFF	OFF
Fail-safe mode 3	D position	4th	OFF	OFF	OFF	OFF	OFF	OFF	OFF	OFF
	L position	2nd	OFF	OFF	ON	OFF	ON	OFF	OFF	OFF
	R position	Reverse	OFF	OFF	OFF	OFF	ON	OFF	OFF	OFF

Fail-safe mode	Selector lever	Gear position*1	Shift solenoid valve					Pressure control solenoid valve		
			A	B	C	D	E	A	B	C
Fail-safe mode 4	D position	4th	OFF	OFF	OFF	OFF	OFF	OFF	OFF	OFF
	L position	4th	OFF	OFF	OFF	OFF	OFF	OFF	OFF	OFF
	R position	Reverse	OFF	OFF	OFF	OFF	OFF	OFF	OFF	OFF
Fail-safe mode 5	D position	4th	OFF	OFF	OFF	OFF	OFF	OFF	OFF	OFF
	L position	4th	OFF	OFF	OFF	OFF	OFF	OFF	OFF	OFF
	R position	Reverse	OFF	OFF	OFF	OFF	ON	OFF	OFF	OFF
Fail-safe mode 6	D position	4th	OFF	OFF	OFF	OFF	OFF	OFF	OFF	OFF
	L position	2nd	OFF	OFF	ON	OFF	OFF	OFF	OFF	OFF
	R position	Reverse	OFF	OFF	ON	OFF	OFF	OFF	OFF	OFF
Fail-safe mode 7	D position	4th	ON	OFF	OFF	OFF	OFF	OFF	OFF	OFF
	L position	2nd	ON	OFF	ON	OFF	OFF	OFF	OFF	OFF
	R position	Reverse*2	ON	OFF	ON	ON	OFF	OFF	OFF	OFF
Fail-safe mode 8 (CONSULT-III displays “1”)	D position	5th	OFF	ON	OFF	OFF	OFF	OFF	OFF	OFF
	L position	(2nd)*3	OFF	ON	ON	OFF	OFF	OFF	OFF	OFF
	R position	Reverse	OFF	ON	OFF	OFF	ON	OFF	OFF	OFF
Fail-safe mode 9 (CONSULT-III displays “8”)	D position	4th	OFF	OFF	OFF	ON	OFF	OFF	OFF	OFF
	L position	4th	OFF	OFF	OFF	OFF	OFF	OFF	OFF	OFF
	R position	Reverse	OFF	OFF	OFF	OFF	ON	OFF	OFF	OFF
Fail-safe mode 10 (CONSULT-III displays “6”)	D position	4th	OFF	OFF	OFF	ON	OFF	OFF	OFF	OFF
	L position	3rd	OFF	OFF	ON	ON	OFF	OFF	OFF	OFF
	R position	Reverse*2	OFF	OFF	ON	ON	OFF	OFF	OFF	OFF

*1: CONSULT-III indicates “5th”.

*2: Reverse gear ratio difference (Gear ratio: 3.342)

*3: 3rd gear ratio difference (Gear ratio: 2.301)

How To Perform Trouble Diagnosis for Quick and Accurate Repair

INFOID:0000000001717864

INTRODUCTION

The TCM receives a signal from the vehicle speed signal, ECM (throttle opening) or PNP switch and provides shift control or lock-up control via A/T solenoid valves.

The TCM also communicates with the ECM by means of a signal sent from sensing elements used with the OBD-related parts of the A/T system for malfunction-diagnostic purposes. The TCM is capable of diagnosing malfunctioning parts while the ECM can store malfunctions in its memory.

Input and output signals must always be correct and stable in the operation of the A/T system. The A/T system must be in good operating condition and be free of valve seizure, solenoid valve malfunction, etc.

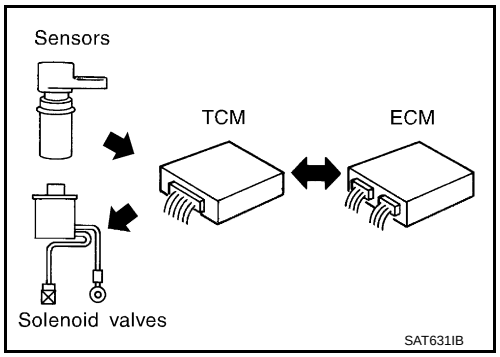

It is much more difficult to diagnose an error that occurs intermittently rather than continuously. Most intermittent errors are caused by poor electric connections or improper wiring. In this case, careful checking of suspected circuits may help prevent the replacement of good parts.
A visual check only may not find the cause of the errors. A road test with CONSULT-III (or GST) or a circuit tester connected should be performed. Follow the "WORK FLOW".

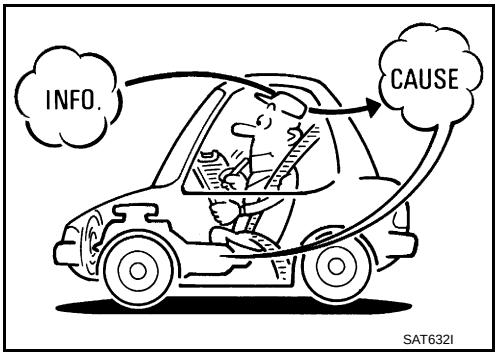

Before undertaking actual checks, take a few minutes to talk with a customer who approaches with a driveability complaint. The customer can supply good information about such errors, especially intermittent ones. Find out what symptoms are present and under what conditions they occur. A “Diagnostic Worksheet” as shown on the example (Refer to "Diagnostic Worksheet Chart") should be used.
Start your diagnosis by looking for “conventional” errors first. This will help troubleshoot driveability errors on an electronically controlled engine vehicle.
Also check related Service bulletins.

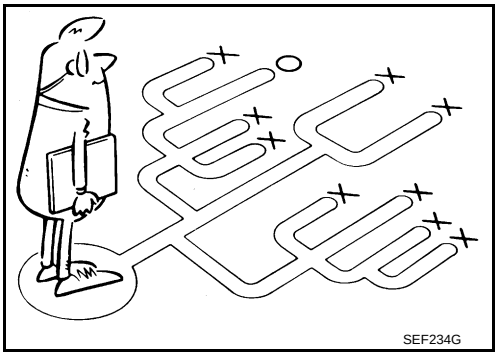

WORK FLOW

A good understanding of the malfunction conditions can make troubleshooting faster and more accurate.
In general, each customer feels differently about a malfunction. It is important to fully understand the symptoms or conditions for a customer complaint.
Make good use of the two sheets provided, “Information From Customer” (Refer to "Information From Customer") and “Diagnostic Worksheet” (Refer to "Diagnostic Worksheet Chart"), to perform the best troubleshooting possible.

Work Flow Chart

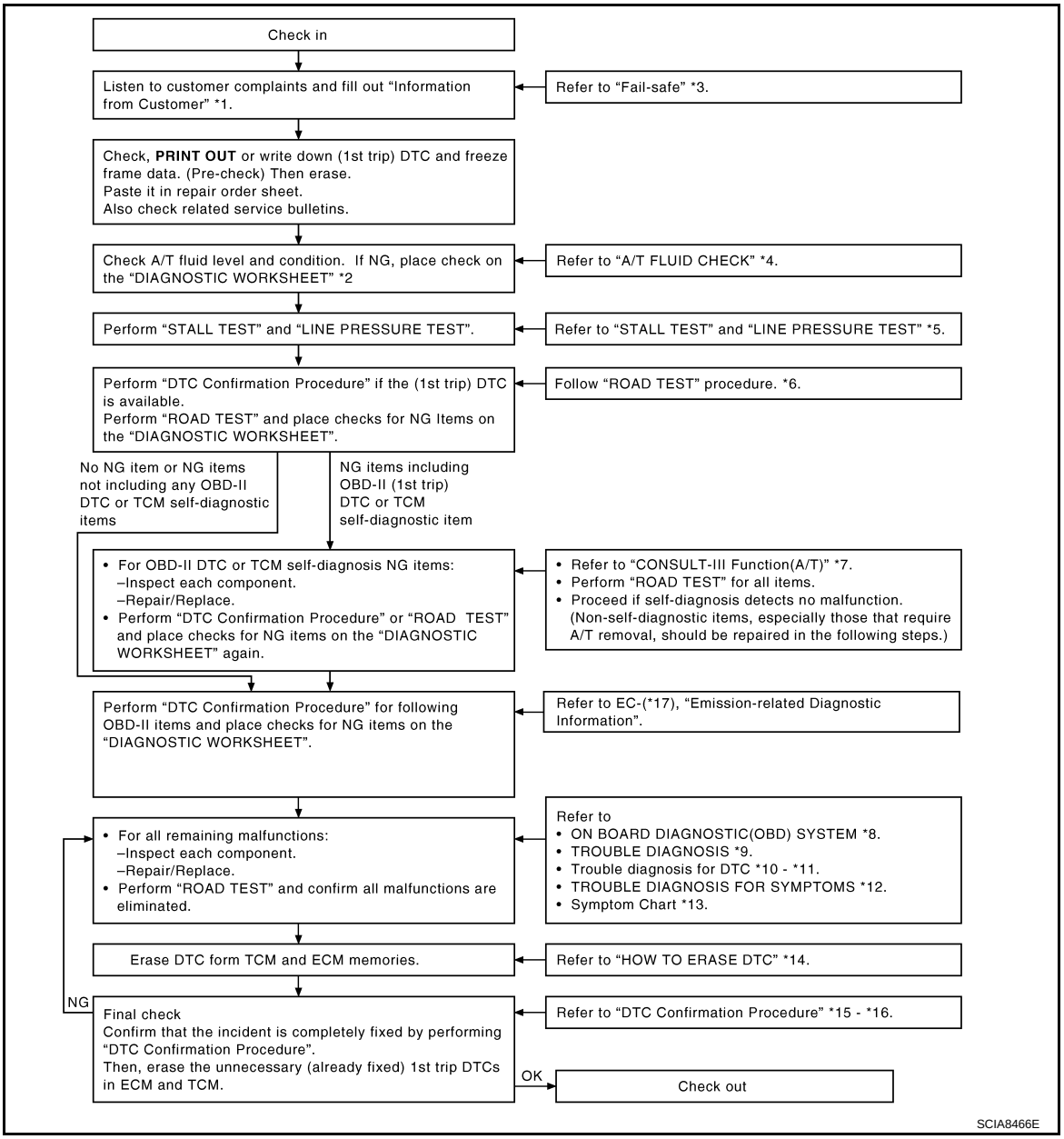

*1. "Information From Customer"	*2. "Diagnostic Worksheet Chart"	*3. AT-39
*4. AT-49	*5. AT-49, AT-49	*6. AT-49
*7. AT-69	*8. AT-36	*9. AT-38
*10. AT-77	*11. AT-192	*12. AT-193
*13. AT-59	*14. AT-36	*15. AT-77
*16. AT-192	*17. EC-43	

DIAGNOSTIC WORKSHEET

Information From Customer

KEY POINTS
- **WHAT**..... Vehicle & A/T model
- **WHEN**..... Date, Frequencies
- **WHERE**..... Road conditions
- **HOW**..... Operating conditions, Symptoms

Customer name MR/MS	Model & Year	VIN
Trans. Model	Engine	Mileage
Incident Date	Manuf. Date	In Service Date
Frequency	❑ Continuous ❑ Intermittent (times a day)	
Symptoms	❑ Vehicle does not move. (❑ Any position ❑ Particular position)	
	❑ No up-shift (❑ 1st → 2nd ❑ 2nd → 3rd ❑ 3rd → 4th ❑ 4th → 5th)	
	❑ No down-shift (❑ 5th → 4th ❑ 4th → 3rd ❑ 3rd → 2nd ❑ 2nd → 1st)	
	❑ Lock-up malfunction	
	❑ Shift point too high or too low.	
	❑ Shift shock or slip (❑ N → D ❑ Lock-up ❑ Any drive position)	
	❑ Noise or vibration	
	❑ No kick down	
	❑ No pattern select	
	❑ Others ( )	
Malfunction indicator lamp (MIL)	❑ Continuously lit	❑ Not lit

Diagnostic Worksheet Chart

1	❑ Read the item on cautions concerning fail-safe and understand the customer's complaint.			AT-39
2	❑ A/T fluid inspection			AT-49
		❑ Leak (Repair leak location.) ❑ State ❑ Amount		
3	❑ Stall test, time lag test and line pressure test			AT-49, AT-49
		❑ Stall test		
		❑ Engine ❑ Torque converter one-way clutch ❑ Line pressure is low ❑ Forward clutch ❑ Direct clutch ❑ 1st and reverse brake	❑ B5 brake ❑ One-way clutch No. 2 ❑ Oil pump ❑ Oil strainer ❑ Oil leak for each range circuit	
		❑ Time lag test		
		❑ Line pressure is low ❑ Forward clutch ❑ Direct clutch ❑ 1st and reverse brake ❑ One-way clutch No. 2	❑ Oil pump ❑ Oil strainer ❑ Oil leak for “D” position circuit ❑ Oil leak for “R” position circuit	
		❑ Line pressure inspection - Suspected part:		

4	❏ Perform all road tests and enter checks in required inspection items.			AT-49
	4-1.	Check before engine is started		AT-54
		❏ The O/D OFF indicator lamp does not come on. AT-193. ❏ Perform self-diagnostics. Enter checks for detected items.		
			❏ Vehicle speed sensor·MTR. AT-80. ❏ TCM processor. AT-82. ❏ PNP switch. AT-83. ❏ A/T fluid temperature sensor circuit. AT-88. ❏ A/T fluid temperature sensor performance. AT-93. ❏ Turbine revolution sensor circuit. AT-98. ❏ Vehicle speed sensor·A/T (revolution sensor) circuit. AT-102. ❏ Engine speed input circuit performance. AT-106. ❏ 1st gear function. AT-108. ❏ 2nd gear function. AT-111. ❏ 3rd gear function. AT-116. ❏ 4th gear function. AT-120. ❏ 5th gear function. AT-123. ❏ Lock-up function. AT-127. ❏ Shift function. AT-170. ❏ Pressure control solenoid valve A. AT-130. ❏ Pressure control solenoid valve B. AT-165. ❏ Pressure control solenoid valve C. AT-174. ❏ Shift solenoid valve A. AT-135. ❏ Shift solenoid valve B. AT-140. ❏ Shift solenoid valve C. AT-145. ❏ Shift solenoid valve D. AT-155. ❏ Shift solenoid valve E. AT-160. ❏ Pressure control solenoid valve C stuck ON. AT-179. ❏ Shift solenoid valve C stuck ON. AT-150. ❏ Lever switch circuit. AT-184. ❏ TCM power input signal. AT-188. ❏ Electric throttle control system. AT-192. ❏ CAN communication. AT-77. ❏ Battery ❏ Other	
	4-2.	Idle inspection		AT-54
		❏ Engine cannot be started in “P” and “N” position. AT-194. ❏ In “ P” position, vehicle moves when pushed. AT-195. ❏ In “N” position, vehicle moves. AT-195. ❏ Large shock when shifted from “N” to “D” position. AT-196. ❏ Vehicle does not creep backward in “R” position. AT-196. ❏ Vehicle does not creep forward in “D” or “L” position. AT-197.		
	4-3.	Driving tests		AT-55
		Part 1		
		❏ Vehicle cannot be started from D1. AT-198. ❏ A/T does not shift: D1 → D2. AT-199. ❏ A/T does not shift: D2 → D3. AT-200. ❏ A/T does not shift: D3 → D4. AT-201. ❏ A/T does not shift: D4 → D5. AT-202. ❏ A/T does not perform lock-up. AT-203 ❏ A/T does not hold lock-up condition. AT-203. ❏ Lock-up is not released. AT-204.		

		Part 2		
		❏ Vehicle cannot be started from D1. AT-198. ❏ A/T does not shift: D1 → D2. AT-199. ❏ A/T does not shift: D2 → D3. AT-200. ❏ A/T does not shift: D3 → D4. AT-201.		AT-57
		Part 3		
		❏ A/T does not shift: 5th gear → 4th gear, when lever switch “OFF”→“ON”. AT-205. ❏ A/T does not shift: 4th gear → 3rd gear, when selector lever “D”→“L”. AT-206. ❏ A/T does not shift: 3rd gear → 2nd gear, when lever switch “OFF”→“ON”. AT-207. ❏ A/T does not shift: 2nd gear → 1st gear, when release accelerator pedal. AT-207. ❏ Vehicle does not decelerate by engine brake. AT-208. ❏ Perform self-diagnostics. Enter checks for detected items.		AT-57
4	4-3		❏ Vehicle speed sensor·MTR. AT-80. ❏ TCM processor. AT-82. ❏ PNP switch. AT-83. ❏ A/T fluid temperature sensor circuit. AT-88. ❏ A/T fluid temperature sensor performance. AT-93. ❏ Turbine revolution sensor circuit. AT-98. ❏ Vehicle speed sensor·A/T (revolution sensor) circuit. AT-102. ❏ Engine speed input circuit performance. AT-106. ❏ 1st gear function. AT-108. ❏ 2nd gear function. AT-111. ❏ 3rd gear function. AT-116. ❏ 4th gear function. AT-120. ❏ 5th gear function. AT-123. ❏ Lock-up function. AT-127. ❏ Shift function. AT-170. ❏ Pressure control solenoid valve A. AT-130. ❏ Pressure control solenoid valve B. AT-165. ❏ Pressure control solenoid valve C. AT-174. ❏ Shift solenoid valve A. AT-135. ❏ Shift solenoid valve B. AT-140. ❏ Shift solenoid valve C. AT-145. ❏ Shift solenoid valve D. AT-155. ❏ Shift solenoid valve E. AT-160. ❏ Pressure control solenoid valve C stuck ON. AT-179. ❏ Shift solenoid valve C stuck ON. AT-150. ❏ Lever switch circuit. AT-184. ❏ TCM power input signal. AT-188. ❏ Electric throttle control system. AT-192. ❏ CAN communication. AT-77. ❏ Battery ❏ Other	
5	❏ Inspect each system for items found to be NG in the self-diagnostics and repair or replace the malfunction parts.			
6	❏ Perform all road tests and enter the checks again for the required items.			AT-49
7	❏ For any remaining NG items, perform the “diagnostics procedure” and repair or replace the malfunction parts. See the chart for diagnostics by symptoms. (This chart also contains other symptoms and inspection procedures.)			AT-59
8	❏ Erase the results of the self-diagnostics from the TCM.			AT-69AT-74

A/T Electrical Parts Location

INFOID:0000000001717865

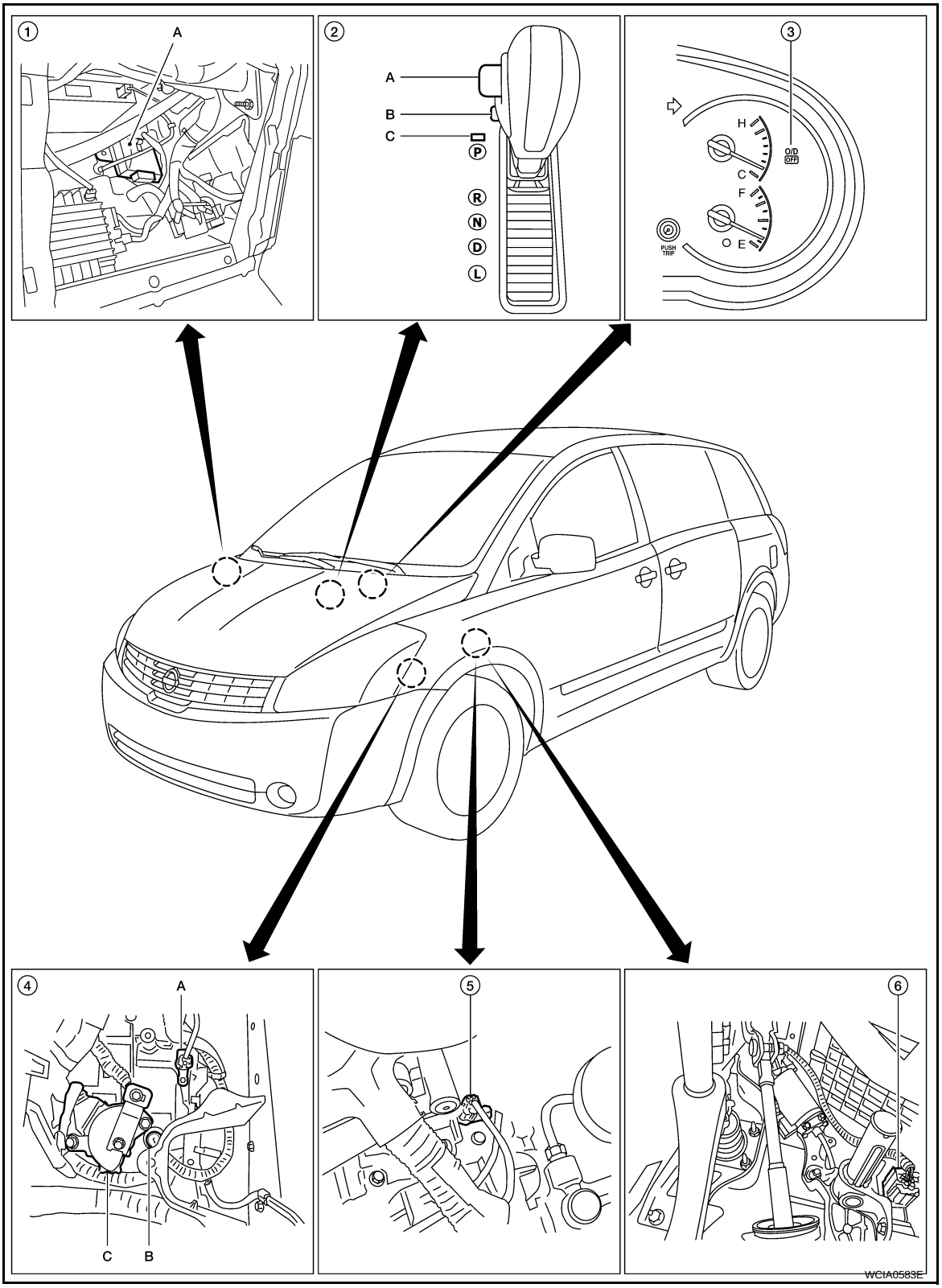

1. A. TCM (transmission control module (view with glove box removed)
2. A. Shift lock button
   B. Overdrive control switch
   C. Shift position indicator
3. O/D OFF indicator
4. A. Turbine revolution sensor F37
   B. Terminal cord assembly F30, F62
   C. Park/neutral position (PNP) switch F29
   (view with battery tray removed)
5. Revolution sensor F38
   (view with intake air duct removed)
6. Accelerator pedal position sensor harness connector E20

Circuit Diagram

INFOID:0000000001717866

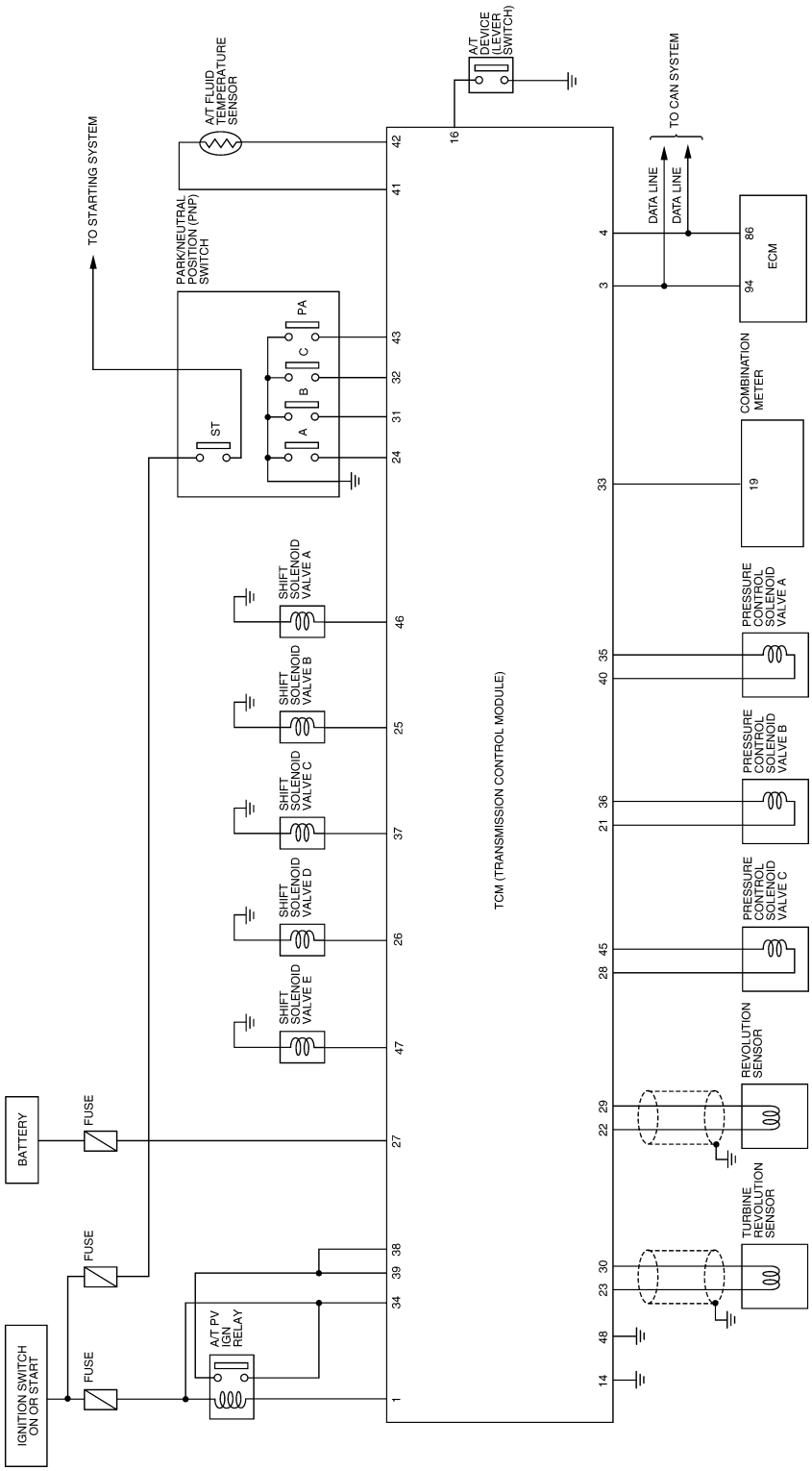

BCWA0594E

Inspections Before Trouble Diagnosis

INFOID:0000000001717867

A/T FLUID CHECK

Fluid leakage and fluid level check

- Inspect for fluid leakage and check the fluid level. Refer to MA-23, "Checking A/T Fluid".

Fluid condition check

Inspect the fluid condition.

Fluid status	Conceivable Cause	Required Operation
Varnished (viscous varnish state)	Clutch, brake scorched	Replace the A/T fluid and check the A/T main unit and the vehicle for malfunctions (wire harnesses, cooler pipes, etc.)
Milky white or cloudy	Water in the fluid	Replace the A/T fluid and check for places where water is getting in.
Large amount of metal powder mixed in	Unusual wear of sliding parts within A/T	Replace the A/T fluid and check for improper operation of the A/T.

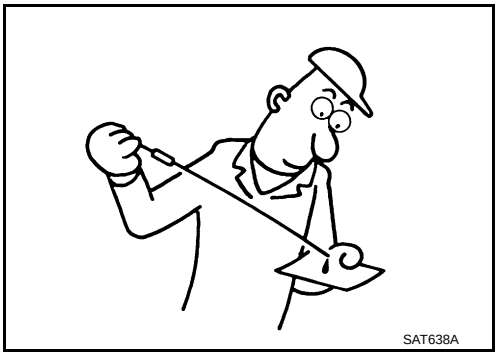

STALL TEST

Stall test procedure

1. Inspect the amount of engine oil. Replenish the engine oil if necessary.
2. Drive for about 10 minutes to warm up the vehicle so that the A/T fluid temperature is 50 to 80°C (122 to 176°F). Inspect the amount of A/T fluid. Replenish if necessary.
3. Switch of A/C and light etc. are off.

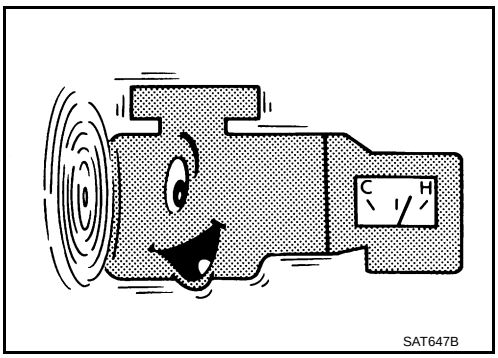

4. Securely engage the parking brake so that the tires do not turn.

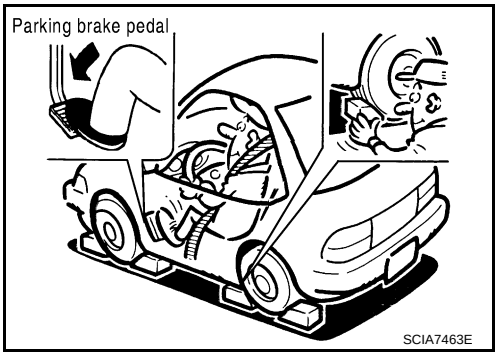

5. Engine start, apply foot brake, and place selector lever in “D” position.
6. While holding down the foot brake, gradually press down the accelerator pedal.
7. Quickly read off the stall speed, then quickly remove your foot from the accelerator pedal.
   CAUTION:
   Do not hold down the accelerator pedal for more than 5 seconds during this test.
8. Move the selector lever to the “N” position.
9. Cool down the A/T fluid.
   CAUTION:
   Run the engine at idle for at least one minute.
10. Repeat step 5 through 9 with selector lever in “L” and “R” positions.

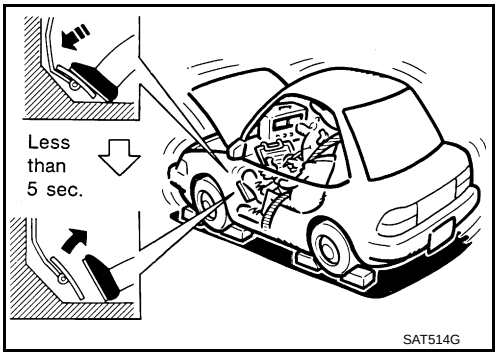

Stall speed: 2,430 - 2,730 rpm

Judgement stall test

	Selector lever position		Possible cause
	D, L	R	
Stall rotation	H	O	• Line pressure is low (pressure control solenoid valve A malfunction, primary regulator valve malfunction) • Forward clutch (slipping) • One-way clutch No. 2
	O	H	• Line pressure is low (pressure control solenoid valve A malfunction, primary regulator valve malfunction) • Direct clutch (slipping) • 1st and reverse brake (slipping)
	L	L	• Engine or torque converter one-way clutch
	H	H	• Line pressure is low (pressure control solenoid valve A malfunction, primary regulator valve malfunction) • B5 brake (slipping) • Oil pump • Oil strainer (clogging) • Oil leak for each range circuit

O: Stall speed within standard value position

H: Stall speed higher than standard value

L: Stall speed lower than standard value

TIME LAG TEST

Time lag test procedure

1. Inspect the amount of engine oil. Replenish the engine oil if necessary.
2. Drive for about 10 minutes to warm up the vehicle so that the A/T fluid temperature is 50 to 80°C (122 to 176°F). Check the amount of A/T fluid. Replenish if necessary.
3. Switch of A/C and light etc. are off.

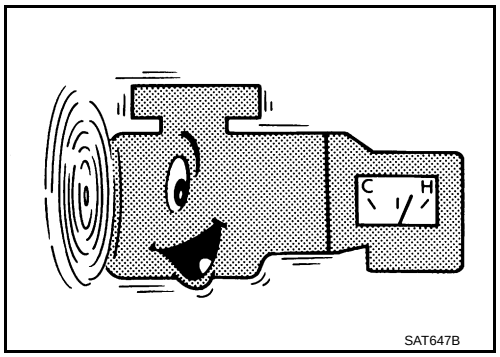

4. Securely engage the parking brake so that the tires do not turn.
5. Engine start, apply foot brake.
6. Measure time lag by using stopwatch from moment when shift lever is shifted in “N” to “D” position and “N” to “R” position until moment slightly shock can be felt.

   CAUTION:
   - **Make sure to take 3 measurement and take the average value.**
   - **Make sure to keep interval for more than one minute between time lag tests.**
     (That purpose is to remove clutch/brake pressure was left unfinished.)

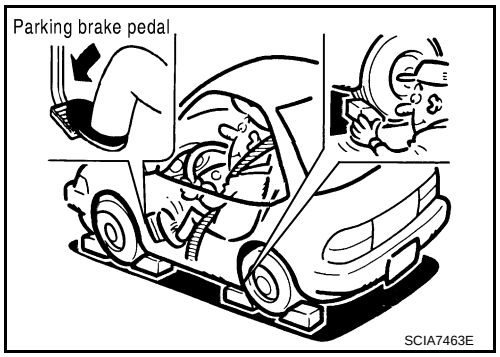

Time lag:

“N” to “D” position: Less than 0.7 sec.

“N” to “R” position: Less than 1.2 sec.

Judgement time lag test

Result of time lag test	Possible cause
Longer than standards “N” to “D” position	• Line pressure is low (pressure control solenoid valve A malfunction, primary regulator valve malfunction) • Forward clutch (slipping) • One-way clutch No. 2 • Oil leak for “D” range circuit
Longer than standards “N” to “R” position	• Line pressure is low • Direct clutch (slipping) • 1st and reverse brake (slipping) • Oil leak for “R” range circuit • Oil pump • Oil strainer (clogging)

LINE PRESSURE TEST

Line pressure test port
Location of line pressure test port is show in the figure.

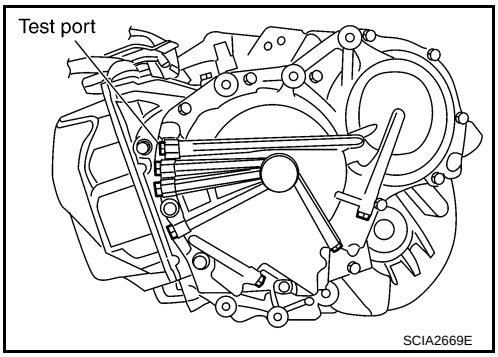

Line pressure test procedure

1. Inspect the amount of engine oil and replenish if necessary.
2. Drive the car for about 10 minutes to warm it up so that the A/T fluid reaches in range of 50 to 80°C (122 to 176°F), then inspect the amount of A/T fluid and replenish if necessary.
   NOTE:
   The automatic fluid temperature rises in range of 50 to 80°C (122 to 176°F) during 10 minutes of driving.
3. Switch of A/C and light etc. are off.
4. After warming up A/T, remove the oil pressure detection plug and install the oil pressure gauge [SST: (J-34301-C)] and adapter [SST: (J-45542)].
   CAUTION:
   Make sure to check no oil leak after installing oil pressure gage.
5. Securely engage the parking brake so that the tires do not turn.

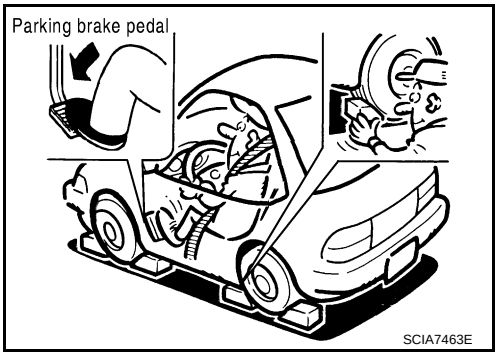

6. Start the engine, then measure the line pressure at both idle and the stall speed.
   CAUTION:
   - **Keep the brake pedal pressed all the way down during measurement.**
   - **When measuring the line pressure at the stall speed, refer to "STALL TEST".**
7. After the measurements are complete, install the oil pressure detection plug and tighten to the specified torque.

   :7.4 N·m (0.75 kg-m, 65 in-lb)

   CAUTION:
   Do not reuse O-ring.

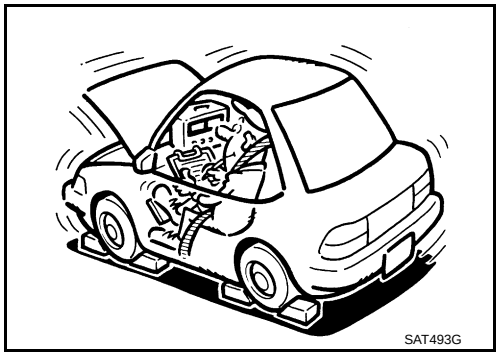

Line pressure

Engine speed	Line pressure kPa (kg/cm^2, psi)	
	D, L positions	R position
At idle speed	333 - 392 (3.4 - 4.0, 48 - 57)	500 - 608 (5.1 - 6.2, 73 - 88)
At stall speed	1,285 - 1,393 (13.1 - 14.2, 186 - 202)	1,706 - 1,981 (17.4 - 20.2, 247 - 287)

Judgement of line pressure test

Judgement	Possible cause
Higher than standards both “D”, “L” and “R” positions	• Pressure control solenoid valve A malfunction • Primary regulator valve malfunction
Lower than standards both “D”, “L” and “R” positions	• Pressure control solenoid valve A malfunction • Primary regulator valve malfunction • Oil pump malfunction • B5 bake malfunction • Oil leak for each range circuit malfunction
Lower than standards only “D” position	• Oil leak for “D” range circuit malfunction • Forward clutch malfunction
Lower than standards only “R” position	• Oil leak for “R” range circuit malfunction • Direct clutch malfunction • 1st and reverse brake malfunction

ROAD TEST

Description
- The road test inspects overall performance of the A/T and analyzes possible malfunction causes.
- The road test is perform in the following three stages.

1. Check before engine is started. Refer to AT-54.
2. Check at idle. Refer to AT-54.
3. Cruise test
   - Inspect all the items from Part 1 to Part 3. Refer to AT-55, AT-57, AT-57.

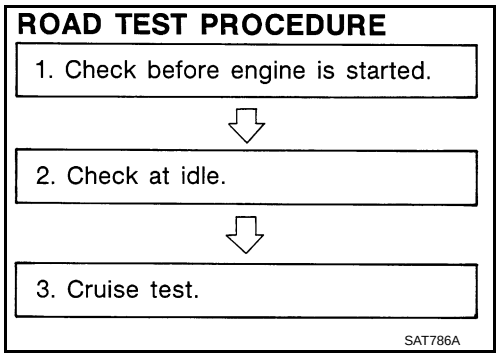

- Before beginning the road test, check the test procedure and inspection items.
- Test all inspection items until the symptom is uncovered. Diagnose NG items when all road tests are complete.

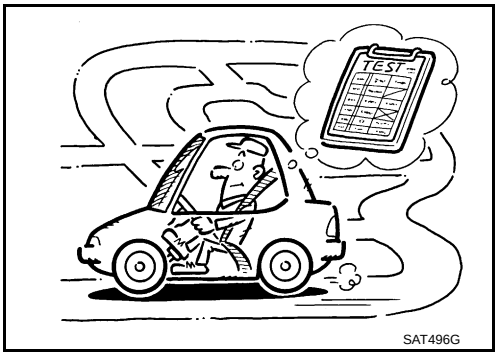

Check Before Engine Is Started

INFOID:0000000001717868

1. CHECK O/D OFF INDICATOR LAMP

1. Park vehicle on level surface.
2. Move selector lever to “P” position.
3. Turn ignition switch “OFF” and wait at least 10 seconds.
4. Turn ignition switch “ON”. (Do not start engine.)

Does O/D OFF indicator lamp light up for about 2 seconds?

YES >> 1. Turn ignition switch “OFF”.
2. Perform the self-diagnostics and record all NG items on the diagnostics worksheet. Refer to AT-74, "Diagnosis Procedure".
3. Go to AT-54, "Check at Idle".

No >> Stop the road test and go to AT-193, "O/D OFF Indicator Lamp Does Not Come On".

Check at Idle

INFOID:0000000001717869

1. CHECK STARTING THE ENGINE

1. Park vehicle on level surface.
2. Move selector lever to “P” position.
3. Turn ignition switch “OFF”.
4. Turn ignition switch “START”.

Does the engine start?

YES >> GO TO 2.

No >> Stop the road test and go to AT-194, "Engine Cannot Be Started in "P" or "N" Position".

2. CHECK STARTING THE ENGINE

1. Turn ignition switch "ON". (Do not start engine.)
2. Move selector lever in “D”, “L” or “R” position.
3. Turn ignition switch “START”.

Does the engine start in either position?

YES >> Stop the road test and go to AT-194, "Engine Cannot Be Started in "P" or "N" Position".

No >> GO TO 3.

3. CHECK “P” POSITION FUNCTIONS

1. Move selector lever to “P” position.
2. Turn ignition switch “OFF”.
3. Release the parking brake.
4. Push the vehicle forward or backward.
5. Engage the parking brake.

When you push the vehicle with disengaging the parking brake, does it move?

YES >> Enter a check mark at “In P position, vehicle moves when pushed” on the diagnostics worksheet, then continue the road test.

No >> GO TO 4.

4. CHECK “N” POSITION FUNCTIONS

1. Start the engine.

2. Move selector lever to “N” position.
3. Release the parking brake.

Does vehicle move forward or backward?

YES >> Enter a check mark at “In N position, vehicle moves” on the diagnostics worksheet, then continue the road test.
No >> GO TO 5.

5. CHECK SHIFT SHOCK

1. Engage the brake.
2. Move selector lever to “D” position.

When the transaxle is shifted from “N” to “D”, is there an excessive shock?

YES >> Enter a check mark at “Large shock when shifted from N to D position” on the diagnostics worksheet, then continue the road test.
No >> GO TO 6.

6. CHECK “R” POSITION FUNCTIONS

1. Engage the brake.
2. Move selector lever to “R” position.
3. Disengage the brake for 4 to 5 seconds.

Does the vehicle creep backward?

YES >> GO TO 7.
No >> Enter a check mark at “Vehicle does not creep backward in R position” on the diagnostics worksheet, then continue the road test.

7. CHECK “D” AND “L” POSITIONS FUNCTIONS

Inspect whether the vehicle moves forward when the transaxle is put into the “D” and “L” positions.

Does the vehicle move forward in the “D” and “L” positions?

YES >> Go to AT-55, "Cruise Test - Part 1", AT-57, "Cruise Test - Part 2", and AT-57, "Cruise Test - Part 3".
No >> Enter a check mark at “Vehicle does not creep forward in D or L position” on the diagnostics worksheet, then continue the road test.

Cruise Test - Part 1

INFOID:0000000001717870

1. CHECK STARTING OUT FROM D1

1. Drive the vehicle for about 10 minutes to warm up the engine oil and A/T fluid.
   Appropriate temperature for the A/T fluid: 50 - 80°C (122 - 176°F)
2. Park the vehicle on a level surface.
3. Move selector lever to “P” position.
4. Start the engine.
5. Move selector lever to “D” position.
6. Press the accelerator pedal about half way down to accelerate the vehicle.

With CONSULT-III

Read off the gear positions.

Starts from D1?

YES >> GO TO 2.
No >> Enter a check mark at “Vehicle cannot be started from D1” on the diagnostics worksheet, then continue the road test.

2. CHECK SHIFT-UP D1 → D2

Press down the accelerator pedal about half way and inspect if the vehicle shifts up (D1 → D2) at the appropriate speed.

- Refer to AT-58.

With CONSULT-III

Read the gear position, throttle degree of opening, and vehicle speed.

Does the A/T shift-up D1 → D2 at the correct speed?

YES >> GO TO 3.

No >> Enter a check mark at “A/T does not shift D1 → D2” on the diagnostics worksheet, then continue the road test.

3. CHECK SHIFT-UP D2 → D3

Press down the accelerator pedal about half way and inspect if the vehicle shifts up (D2 → D3) at the appropriate speed.
- Refer to AT-58.

With CONSULT-III
Read the gear position, throttle degree of opening, and vehicle speed.

Does the A/T shift-up D2 → D3 at the correct speed?

YES >> GO TO 4.
No >> Enter a check mark at “A/T does not shift D2 → D3” on the diagnostics worksheet, then continue the road test.

4. CHECK SHIFT-UP D3 → D4

Press down the accelerator pedal about half way and inspect if the vehicle shifts up (D3 → D4) at the appropriate speed.
- Refer to AT-58.

With CONSULT-III
Read the gear position, throttle degree of opening, and vehicle speed.

Does the A/T shift-up D3 → D4 at the correct speed?

YES >> GO TO 5.
NO >> Enter a check mark at “A/T does not shift D3 → D4” on the diagnostics worksheet, then continue the road test.

5. CHECK SHIFT-UP D4 → D5

Press down the accelerator pedal about half way and inspect if the vehicle shifts up (D4 → D5) at the appropriate speed.
- Refer to AT-58.

With CONSULT-III
Read the gear position, throttle degree of opening, and vehicle speed.

Does the A/T shift-up D4 → D5 at the correct speed?

YES >> GO TO 6.
NO >> Enter a check mark at “A/T does not shift D4 → D5” on the diagnostics worksheet, then continue the road test.

6. CHECK LOCK-UP

When releasing accelerator pedal from D5, check lock-up from D5 to L/U.
- Refer to AT-58.

With CONSULT-III
Read the lock-up status.

Does it lock-up?

YES >> GO TO 7.
NO >> Enter a check mark at “A/T does not perform lock-up” on the diagnostics worksheet, then continue the road test.

7. CHECK LOCK-UP HOLD

Check lock–up hold.

Does it maintain lock-up status?

YES >> GO TO 8.
NO >> Enter a check mark at “A/T does not hold lock-up condition” on the diagnostics worksheet, then continue the road test.

8. CHECK LOCK-UP RELEASE

Check lock-up cancellation by depressing brake pedal lightly to decelerate.

With CONSULT-III
Read the lock-up status.

Does lock-up cancel?

YES >> 1. Stop the vehicle.
2. Go to Cruise test - Part 2 (Refer to AT-57).

NO >> Enter a check mark at “Lock-up is not released” on the diagnostics worksheet, then continue the road test. Go to Cruise test - Part 2 (Refer to AT-57).

Cruise Test - Part 2

INFOID:0000000001717871

1. CHECK STARTING FROM D1

1. Move selector lever the “D” position.
2. Accelerate at half throttle.

With CONSULT-III

Read the gear position.

Does it start from D1?

YES >> GO TO 2.

NO >> Enter a check mark at “Vehicle cannot be started from D1” on the diagnostics worksheet, then continue the road test.

2. CHECK SHIFT-UP D1 → D2

Press the accelerator pedal down all the way and inspect whether or not the transaxle shifts up (D1 → D2) at the correct speed.

- Refer to AT-58.

With CONSULT-III

Read the gear position, accelerator angle and vehicle speed.

Does the A/T shift-up D1 → D2 at the correct speed?

YES >> GO TO 3.

NO >> Enter a check mark at “A/T does not shift D1 → D2” on the diagnostics worksheet, then continue the road test.

3. CHECK SHIFT-UP D2 → D3

Press the accelerator pedal down all the way and inspect whether or not the transaxle shifts up (D2 → D3) at the correct speed.

- Refer to AT-58.

With CONSULT-III

Read the gear position, accelerator angle and vehicle speed.

Does the A/T shift-up D2 → D3 at the correct speed?

YES >> GO TO 4.

NO >> Enter a check mark at “A/T does not shift D2 → D3” on the diagnostics worksheet, then continue the road test.

4. CHECK SHIFT-UP D3 → D4 AND ENGINE BRAKE

When the transaxle changes speed D2 → D3, return the accelerator pedal.

Does the A/T shift-up D3 → D4 and apply the engine brake?

YES >> 1. Stop the vehicle.
2. Go to Cruise test - Part 3 (Refer to AT-57).

NO >> Enter a check mark at “A/T does not shift D3 → D4” on the diagnostics worksheet, then continue the road test.

Cruise Test - Part 3

INFOID:0000000001717872

1. CHECK SHIFT DOWN (D5 TO D4)

1. Confirm lever switch is in OFF position. (O/D OFF indicator lamp “OFF”.)
2. Confirm gear selector lever is in D position.
3. Accelerate vehicle using half-throttle to D5.
4. Release accelerator pedal.
5. Push lever switch while driving in D5. (O/D OFF indicator lamp “ON” and A/T indicator “4”.)

With CONSULT-III

Read the gear position, throttle degree of opening, and vehicle speed.

Does A/T shift from D5 to D4?

YES >> GO TO 2.
NO >> Enter a check mark at “Vehicle does not shift: 5th gear → 4th gear, when lever switch OFF → ON” on diagnostics worksheet, then continue the road test.

2. CHECK SHIFT DOWN (D4 TO L3)

1. Driving in D4.
2. Move selector lever from D to L position while D4.
3. Release accelerator pedal.

With CONSULT-III

Read the gear position, throttle degree of opening, and vehicle speed.

Does A/T shift from D4 to L3?

YES >> GO TO 3.
NO >> Enter a check mark at “Vehicle does not shift: 4th gear → 3rd gear, when selector lever D → L position” on diagnostics worksheet, then continue the road test.

3. CHECK SHIFT DOWN (L3 TO L2)

1. Confirm lever switch is in OFF position. (A/T indicator “3”.)
2. Confirm gear selector lever is in L position.
3. Accelerate vehicle using half-throttle to L3.
4. Release accelerator pedal.
5. Push lever switch while driving in L3. (A/T indicator “2”.)

With CONSULT-III

Read the gear position, throttle degree of opening, and vehicle speed.

Does A/T shift from L3 to L2?

YES >> GO TO 4.
NO >> Enter a check mark at “Vehicle does not shift: 3rd gear → 2nd gear, when lever switch OFF → ON” on diagnostics worksheet, then continue the road test.

4. CHECK SHIFT DOWN (L2 TO L1)

Release accelerator pedal.

With CONSULT-III

Read the gear position, throttle degree of opening, and vehicle speed.

Does A/T shift from L2 to L1?

YES >> GO TO 5.
NO >> Enter a check mark at “Vehicle does not shift: 2nd gear → 1st gear, when release accelerator pedal” on diagnostics worksheet, then continue the road test.

5. CHECK ENGINE BRAKE

Depress and release accelerator pedal while driving in L1.

With CONSULT-III

Read the gear position.

Does engine braking effectively reduce speed in L1 position?

YES >> 1. Stop the vehicle.
2. Perform the self-diagnostics. Refer to AT-74, "Diagnosis Procedure".
NO >> Enter a check mark at “Vehicle does not decelerate by engine brake” on the diagnostics worksheet, then continue trouble diagnosis.

Shift Schedule

INFOID:0000000001717873

VEHICLE SPEED WHEN SHIFTING GEARS

Accelerator angle	Vehicle speed km/h (MPH) (Approx.)							
	D1→D2	D2→D3	D3→D4	D4→D5	D5→D4	D4→D3	D3→D2	D2→D1
100 %	67 (42)	105 (65)	170 (106)	241 (150)	230 (143)	160 (99)	92 (57)	45 (28)
90 %	67 (42)	105 (65)	170 (106)	241 (150)	230 (143)	160 (99)	92 (57)	45 (28)
80 %	65 (40)	100 (62)	152 (94)	227 (141)	178 (111)	142 (88)	86 (53)	45 (28)
70 %	53 (33)	80 (50)	125 (78)	185 (115)	147 (91)	137 (85)	68 (42)	38 (24)
60 %	46 (29)	71 (44)	106 (66)	156 (97)	108 (67)	78 (48)	46 (29)	22 (14)
50 %	43 (27)	67 (42)	97 (60)	145 (90)	98 (61)	68 (42)	40 (25)	18 (11)
40 %	38 (24)	60 (37)	89 (55)	130 (81)	89 (55)	56 (35)	30 (19)	13 (8)
30 %	33 (21)	50 (31)	70 (43)	108 (67)	68 (42)	45 (28)	25 (16)	12 (7)
20 %	23 (14)	35 (22)	49 (30)	77 (48)	49 (30)	32 (20)	22 (14)	8 (5)
10 %	17 (11)	29 (18)	39 (24)	58 (36)	44 (27)	32 (20)	22 (14)	8 (5)

VEHICLE SPEED WHEN PERFORMING AND RELEASING COMPLETE LOCK-UP

Accelerator angle	Vehicle speed km/h (MPH) (Approx.)	
	Lock-up “ON”	Lock-up “OFF”
50 %	190 (118)	137 (85)
15%	101 (63)	72 (45)
0 - 8 %	73 (45)	70 (43)

- Lock-up vehicle speed indicates the speed in D position.
- Perform lock-up inspection after warming up engine.
- Lock-up vehicle speed may vary depending on the driving conditions and circumstances.

VEHICLE SPEED WHEN PERFORMING AND RELEASING SLIP LOCK-UP

Accelerator angle	Gear position	Vehicle speed km/h (MPH) (Approx.)	
		Slip lock-up “ON”	Slip lock-up “OFF”
0 - 10 %	4th	45 (28)	42 (26)
	5th	58 (36)	55 (34)

- Slip lock-up vehicle speed indicates the speed in D position.
- Perform slip lock-up inspection after warming up engine.
- Slip lock-up vehicle speed may vary depending on the driving conditions and circumstances.

Symptom Chart

INFOID:0000000001717874

Numbers are arranged in order of inspection.
Perform inspections starting with number one and work up.

CAUTION:

Do not remove or disassemble any RE5F22A model transaxle parts unless specified to do so in AT section.

Symptom	Condition	Diagnostic Item	Reference page
With selector lever in D position, driving is not possible.	ON vehicle	1. Fluid level and state	AT-49
		2. Control cable and PNP switch adjustment	AT-221, AT-219
		3. TCM	AT-66
		4. Pressure control solenoid valve A	AT-130
		5. Control valve assembly	AT-222
	OFF vehicle	6. Torque converter	AT-224
		7. Forward and direct clutch assembly	AT-232
		8. B5 brake	AT-259
		9. One-way clutch No.2	AT-232
With selector lever in R position, driving is not possible.	ON vehicle	1. Fluid level and state	AT-49
		2. Control cable and PNP switch adjustment	AT-221, AT-219
		3. TCM	AT-66
		4. Shift solenoid valve A	AT-135
		5. Shift solenoid valve B	AT-140
		6. Pressure control solenoid valve A	AT-130
		7. Control valve assembly	AT-222
	OFF vehicle	8. Torque converter	AT-232
		9. Forward and direct clutch assembly	AT-232
		10. 1st and reverse brake	AT-232
		11. B5 brake	AT-259
No shock at all or the clutch slips when vehicle changes speed.	ON vehicle	1. Fluid level and state	AT-49
		2. Control cable and PNP switch adjustment	AT-221, AT-219
		3. TCM	AT-66
		4. Shift solenoid valve A	AT-135
		5. Shift solenoid valve B	AT-140
		6. Shift solenoid valve E	AT-160
		7. Pressure control solenoid valve A	AT-130
		8. Pressure control solenoid valve C	AT-174
		9. Control valve assembly	AT-222
	OFF vehicle	10. Accumulator	AT-232
Time lag is large. (“N” →“ D” position)	ON vehicle	1. Fluid level and state	AT-49
		2. Actual engine torque signal	AT-106
		3. Turbine revolution sensor	AT-98
		4. TCM	AT-66
		5. Control valve assembly	AT-222
	OFF vehicle	6. Accumulator	AT-232
		7. Forward and direct clutch assembly	AT-232

Symptom	Condition	Diagnostic Item	Reference page
Time lag is large. (“N” →“ R” position)	ON vehicle	1. Fluid level and state	AT-49
		2. Actual engine torque signal	AT-106
		3. Turbine revolution sensor	AT-98
		4. TCM	AT-66
		5. Shift solenoid valve E	AT-160
		6. Control valve assembly	AT-222
	OFF vehicle	7. Forward and direct clutch assembly	AT-232
		8. 1st and reverse brake	AT-232
Engine does not start in “N”, “P” position.	ON vehicle	1. Ignition switch and starter	PG-3, SC-10
		2. Control cable adjustment	AT-221
		3. PNP switch	AT-83
Engine starts in positions other than “N” or “P”.	ON vehicle	1. Ignition switch and starter	PG-3, SC-10
		2. Control cable adjustment	AT-221
		3. PNP switch	AT-83
Engine stalls when selector lever shifted “N” → “D”, “R”.	ON vehicle	1. Fluid level and state	AT-49
		2. TCM	AT-66
		3. Shift solenoid valve D	AT-155
		4. Pressure control solenoid valve C	AT-174
		5. Control valve assembly	AT-222
Engine stall when vehicle slow down.	ON vehicle	1. Fluid level and state	AT-49
		2. TCM	AT-66
		3. Shift solenoid valve D	AT-155
		4. Shift solenoid valve E	AT-160
		5. Pressure control solenoid valve C	AT-174
		6. Control valve assembly	AT-222
Acceleration is extremely poor.	ON vehicle	1. Fluid level and state	AT-49
		2. Control cable and PNP switch adjustment	AT-221, AT-219
		3. Engine speed signal	AT-106
		4. Electric throttle control signal	AT-192
Gear does not change from $D_1 \rightarrow D_2$.	ON vehicle	1. Fluid level and state	AT-49
		2. TCM	AT-66
		3. Electric throttle control signal	AT-192
		4. Shift solenoid valve A	AT-135
		5. Shift solenoid valve B	AT-140
		6. Shift solenoid valve C	AT-145
		7. Shift solenoid valve D	AT-155
		8. Control valve assembly	AT-222
	OFF vehicle	9. 2nd coast brake	AT-251, AT-257
		10. 2nd brake	AT-251
		11. One-way clutch No.1	AT-257
		12. One-way clutch No.2	AT-232

Symptom	Condition	Diagnostic Item	Reference page
Gear does not change from D2 → D3.	ON vehicle	1. Fluid level and state	AT-49
		2. TCM	AT-66
		3. Electric throttle control signal	AT-192
		4. Shift solenoid valve B	AT-140
		5. Shift solenoid valve C	AT-145
		6. Shift solenoid valve D	AT-155
		7. Pressure control solenoid valve A	AT-130
		8. Control valve assembly	AT-222
	OFF vehicle	9. U/D brake	AT-232
		10. B5 brake	AT-259
Gear does not change from D3 → D4.	ON vehicle	1. Fluid level and state	AT-49
		2. TCM	AT-66
		3. Electric throttle control signal	AT-192
		4. Shift solenoid valve B	AT-140
		5. Shift solenoid valve C	AT-145
		6. Shift solenoid valve D	AT-155
		7. Control valve assembly	AT-222
	OFF vehicle	8. U/D clutch	AT-232
		9. U/D brake	AT-232
Gear does not change from D4 → D5.	ON vehicle	1. Fluid level and state	AT-49
		2. TCM	AT-66
		3. Electric throttle control signal	AT-192
		4. Shift solenoid valve B	AT-140
		5. Shift solenoid valve C	AT-145
		6. Control valve assembly	AT-222
	OFF vehicle	7. Forward and direct clutch assembly	AT-232
		8. 2nd coast brake	AT-251, AT-257
		9. One-way clutch No.1	AT-257
In D range, does not downshift to 1st gear.	ON vehicle	1. Fluid level and state	AT-49
		2. TCM	AT-66
		3. Electric throttle control signal	AT-192
		4. Shift solenoid valve A	AT-135
		5. Shift solenoid valve B	AT-140
		6. Shift solenoid valve C	AT-145
		7. Shift solenoid valve D	AT-155
		8. Control valve assembly	AT-222
	OFF vehicle	9. 2nd coast brake	AT-251, AT-257
		10. 2nd brake	AT-251
		11. One-way clutch No.1	AT-257
		12. One-way clutch No.2	AT-232

Symptom	Condition	Diagnostic Item	Reference page
In D range, does not downshift to 2nd gear.	ON vehicle	1. Fluid level and state	AT-49
		2. TCM	AT-66
		3. Electric throttle control signal	AT-192
		4. Shift solenoid valve B	AT-140
		5. Shift solenoid valve C	AT-145
		6. Shift solenoid valve D	AT-155
		7. Pressure control solenoid valve A	AT-130
		8. Control valve assembly	AT-222
	OFF vehicle	9. U/D brake	AT-232
		10. B5 brake	AT-259
In D range, does not downshift to 3rd gear.	ON vehicle	1. Fluid level and state	AT-49
		2. TCM	AT-66
		3. Electric throttle control signal	AT-192
		4. Shift solenoid valve B	AT-140
		5. Shift solenoid valve C	AT-145
		6. Shift solenoid valve D	AT-155
		7. Control valve assembly	AT-222
	OFF vehicle	8. U/D clutch	AT-232
		9. U/D brake	AT-232
In D range, does not downshift to 4th gear.	ON vehicle	1. Fluid level and state	AT-49
		2. TCM	AT-66
		3. Electric throttle control signal	AT-192
		4. Shift solenoid valve B	AT-140
		5. Shift solenoid valve C	AT-145
		6. Control valve assembly	AT-222
	OFF vehicle	7. Forward and direct clutch assembly	AT-232
		8. 2nd coast brake	AT-251, AT-257
		9. One-way clutch No.1	AT-257
Does not lock-up or lock-up is not released.	ON vehicle	1. Fluid level and state	AT-49
		2. Stop lamp switch signal	AT-209
		3. ATF temperature sensor	AT-88
		4. TCM	AT-66
		5. Shift solenoid valve C	AT-145
		6. Shift solenoid valve D	AT-155
		7. Pressure control solenoid valve C	AT-174
		8. Control valve assembly	AT-222
	OFF vehicle	9. Torque converter	AT-224

Symptom	Condition	Diagnostic Item	Reference page
Engine brake does not work.	ON vehicle	1. Fluid level and state	AT-49
		2. TCM	AT-66
		3. Shift solenoid valve E	AT-160
		4. Electric throttle control signal	AT-192
		5. Control valve assembly	AT-222
	OFF vehicle	6. 2nd coast brake	AT-251, AT-257
		7. U/D brake	AT-232
		8. B5 brake	AT-259
Shift point is high or low.	ON vehicle	1. Pressure control solenoid valve A	AT-130
		2. Engine speed signal	AT-106
		3. Electric throttle control signal	AT-192
		4. Revolution sensor	AT-102
		5. TCM	AT-66
		6. Control valve assembly	AT-222
Large shock. (“N” →“ D” position)	ON vehicle	1. Fluid level and state	AT-49
		2. Actual engine torque signal	AT-106
		3. Turbine revolution sensor	AT-98
		4. ATF temperature sensor	AT-88
		5. Shift solenoid valve A	AT-135
		6. Shift solenoid valve B	AT-140
		7. Pressure control solenoid valve A	AT-130
		8. TCM	AT-66
		9. Control valve assembly	AT-222
	OFF vehicle	10. Accumulator	AT-232
		11. Forward and direct clutch assembly	AT-232
Large shock. (“N” →“ R” position)	ON vehicle	1. Fluid level and state	AT-49
		2. Actual engine torque signal	AT-106
		3. Turbine revolution sensor	AT-98
		4. ATF temperature sensor	AT-88
		5. Shift solenoid valve E	AT-160
		6. Pressure control solenoid valve B	AT-165
		7. TCM	AT-66
		8. Control valve assembly	AT-222
	OFF vehicle	9. Forward and direct clutch assembly	AT-232
		10. 1st and reverse brake	AT-232

Symptom	Condition	Diagnostic Item	Reference page
Shock is too large when shift up.	ON vehicle	1. Fluid level and state	AT-49
		2. Actual engine torque signal	AT-106
		3. Turbine revolution sensor	AT-98
		4. ATF temperature sensor	AT-88
		5. TCM power input signal	AT-188
		6. Shift solenoid valve A	AT-135
		7. Shift solenoid valve B	AT-140
		8. Shift solenoid valve C	AT-145
		9. Shift solenoid valve D	AT-155
		10. Shift solenoid valve E	AT-160
		11. Pressure control solenoid valve A	AT-130
		12. Pressure control solenoid valve B	AT-165
		13. Pressure control solenoid valve C	AT-174
		14. TCM	AT-66
		15. Control valve assembly	AT-222
Shock is too large for coast down.	ON vehicle	1. Fluid level and state	AT-49
		2. Actual engine torque signal	AT-106
		3. Turbine revolution sensor	AT-98
		4. ATF temperature sensor	AT-88
		5. TCM power input signal	AT-188
		6. Shift solenoid valve A	AT-135
		7. Shift solenoid valve B	AT-140
		8. Shift solenoid valve C	AT-145
		9. Shift solenoid valve D	AT-155
		10. Shift solenoid valve E	AT-160
		11. Pressure control solenoid valve A	AT-130
		12. Pressure control solenoid valve B	AT-165
		13. Pressure control solenoid valve C	AT-174
		14. TCM	AT-66
		15. Control valve assembly	AT-222

Symptom	Condition	Diagnostic Item	Reference page
Shock is too large for kick down.	ON vehicle	1. Fluid level and state	AT-49
		2. Actual engine torque signal	AT-106
		3. Turbine revolution sensor	AT-98
		4. ATF temperature sensor	AT-88
		5. TCM power input signal	AT-188
		6. Shift solenoid valve A	AT-135
		7. Shift solenoid valve B	AT-140
		8. Shift solenoid valve C	AT-145
		9. Shift solenoid valve D	AT-155
		10. Shift solenoid valve E	AT-160
		11. Pressure control solenoid valve A	AT-130
		12. Pressure control solenoid valve B	AT-165
		13. Pressure control solenoid valve C	AT-174
		14. TCM	AT-66
		15. Control valve assembly	AT-222
Strange noise in “R”,“N” or“ D” position.	ON vehicle	1. Fluid level and state	AT-49
		2. Control valve assembly	AT-222
	OFF vehicle	3. Torque convertor	AT-232
		4. Parking component	AT-225
		5. Gear system	AT-232
With selector lever in P position, vehicle does not enter parking condition or, with selector lever in another position, parking condition is not cancelled.	ON vehicle	1. PNP switch	AT-83
		2. Control cable adjustment	AT-221
		3. Control valve assembly	AT-222
	OFF vehicle	4. Parking component	AT-225
Vehicle runs with transaxle in “ P” position.	ON vehicle	1. Fluid level and state	AT-49
		2. PNP switch	AT-83
		3. Control cable and PNP switch adjustment	AT-221, AT-219
		4. Line pressure test	AT-49
Vehicle runs with transaxle in “N” position.	ON vehicle	1. Fluid level and state	AT-49
		2. PNP switch	AT-83
		3. Control cable and PNP switch adjustment	AT-221, AT-219
		4. Line pressure test	AT-49

TCM Input/Output Signal Reference Value

INFOID:0000000001717875

TCM TERMINAL CONNECTOR LAYOUT

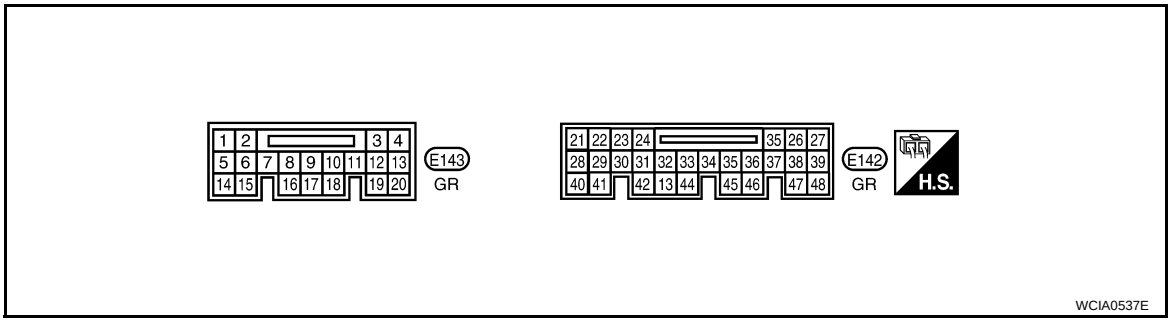

TCM INSPECTION TABLE

Data are reference value and are measured between each terminal and ground.

Terminal	Wire color	Item	Condition		Data (Approx.)
1	Y/W	A/T PV IGN relay		When turning ignition switch ON.	0 - 1.5V
				When turning ignition switch OFF.	0V
3	L	CAN-H	–		–
4	P	CAN-L	–		–
14	B	Ground	–		0V
16	O	Lever switch		Lever switch: “ON” position	0V
				Lever switch: “OFF” position	Battery voltage
21	G/B	Pressure control solenoid valve B ground		When engine is running with idle speed and setting selector lever to “P” position.	0V
22	L	Revolution sensor power supply		When turning ignition switch ON.	Battery voltage
				When turning ignition switch OFF.	0V
23	G	Turbine revolution sensor power supply		When turning ignition switch ON.	Battery voltage
				When turning ignition switch OFF.	0V
24	BR	PNP switch A		Selector lever: “P”, “R” and “L” position	0V
				Other than the above	Battery voltage
25	G/R	Shift solenoid valve B		When shift solenoid valve B operates. (When driving in 1st or 5th gear.)	Battery voltage
				When shift solenoid valve B does not operate.	0V
26	W/B	Shift solenoid valve D		When shift solenoid valve D operates. (When driving in 3rd, 4th or 5th gear.)	Battery voltage
				When shift solenoid valve D does not operate.	0V
27	Y/R	Power supply (Memory back-up)		When turning ignition switch ON.	Battery voltage
				When turning ignition switch OFF.	Battery voltage
28	W	Pressure control solenoid valve C ground		When engine is running with idle speed and setting selector lever to “P” position.	0V

Terminal	Wire color	Item	Condition		Data (Approx.)
29	B/W	Revolution sensor		When moving at 20 km/h (12 MPH) in 1st gear.	119Hz
30	R	Turbine revolution sensor		When moving at 20 km/h (12 MPH) in 1st gear.	371Hz
31	G/Y	PNP switch B		Selector lever: “R”, “N”, “D” and “L” position	0V
				Other than the above	Battery voltage
32	P/B	PNP switch C		Selector lever: “D” and “L” position	0V
				Other than the above	Battery voltage
33	R/V	PNP switch PN		Selector lever: “P” and “N” position	Battery voltage
				Other than the above	0V
34	P	Power supply		When turning ignition switch ON.	Battery voltage
				When turning ignition switch OFF.	0V
35	L/Y	Pressure control solenoid valve A		When engine is running with idle speed and setting selector lever to “P” position.	300Hz
36	W/L	Pressure control solenoid valve B		When engine is running with idle speed and setting selector lever to “P” position.	300Hz
37	R/B	Shift solenoid valve C		When shift solenoid valve C operates. (When driving in 1st, 2nd, 3rd or reverse gear.)	Battery voltage
				When shift solenoid valve C does not operate.	0V
38	Y/B	Power supply (A/T PV IGN relay)		When turning ignition switch ON.	Battery voltage
				Measure 3 seconds after switching “OFF” the ignition switch.	0V
39	Y/B	Power supply (A/T PV IGN relay)		When turning ignition switch ON.	Battery voltage
				Measure 3 seconds after switching “OFF” the ignition switch.	0V
40	L/G	Pressure control solenoid valve A ground		When engine is running with idle speed and setting selector lever to “P” position.	0V
41	R/Y	Fluid temperature sensor		When ATF temperature 0°C (32°F)	4.0V
				When ATF temperature 20°C (68°F)	3.0V
				When ATF temperature 80°C (176°F)	0.8V
				When ATF temperature 100°C (212°F)	0.5V
42	LG/B	Fluid temperature sensor ground	–		0V

Terminal	Wire color	Item	Condition		Data (Approx.)
43	V/W	PNP switch PA		Selector lever: “P”, “N” and “L” position	0V
				Other than the above	Battery voltage
45	O/B	Pressure control solenoid valve C		When engine is running with idle speed and setting selector lever to “P” position.	300Hz
46	W/G	Shift solenoid valve A		When shift solenoid valve A operates. (When driving in 1st gear.)	Battery voltage
				When shift solenoid valve A does not operate.	0V
47	BR/Y	Shift solenoid valve E		When shift solenoid valve E operates. (When driving in reverse gear.)	Battery voltage
				When shift solenoid valve E does not operate.	0V
48	B	Ground	–		0V

CONSULT-III Function (TRANSMISSION)

INFOID:0000000001717876

CONSULT-III can display each diagnostic item using the diagnostic test modes shown following.

A/T diagnostic mode	Description
WORK SUPPORT	Supports inspections and adjustments. Commands are transmitted to the TCM for setting the status suitable for required operation, input/output signals are received from the TCM and received data is displayed.
SELF-DIAG RESULTS	Displays TCM self-diagnosis results.
DATA MONITOR	Displays TCM input/output data in real time.
CAN DIAG SUPPORT MNTR	The result of transmit/receive diagnosis of CAN communication can be read.
ACTIVE TEST	Operation of electrical loads can be checked by sending drive signal to them.
FUNCTION TEST	Conducted by CONSULT-III instead of a technician to determine whether each system is "OK" or "NG".
ECU PART NUMBER	TCM part number can be read.

WORK SUPPORT MODE

Work item

Work item	Condition	Usage
INITIALIZATION	Under the following conditions. • Ignition switch “ON”. • Selector lever “P” or “N” position. • Engine not running. • Vehicle speed is 0 km/h (0 MPH). • Ignition voltage is more than 10.5V. • Malfunction was not detected.	Use to initialize TCM in a case of replacing transaxle or TCM. Refer to AT-7, "Precaution for A/T Assembly or TCM Replacement".

SELF-DIAG RESULT MODE

After performing “SELF-DIAGNOSTIC place check marks for results on the “Diagnostic Worksheet”, AT-41, "How To Perform Trouble Diagnosis for Quick and Accurate Repair". Reference pages are provide following the items.

Display item list

X: Applicable —: Not applicable

Items (CONSULT-III screen terms)	Malfunction is detected when...	TCM self-diagnosis		OBD-II (DTC)
		O/D OFF indicator lamp*3	"TRANSMISSION" with CONSULT-III	MIL indicator lamp*1, "ENGINE" with CONSULT-III or GST
CAN COMM CIRCUIT	• When TCM is not transmitting or receiving CAN communication signal for 2 seconds or more.	X	U1000*4	U1000*4
VEH SPD SE/CIR-MTR	• ECM detects a malfunction in vehicle speed sensor signal, after that TCM inputs the result by CAN communication.	X	P0500	P0500
TCM PROCESSOR	• TCM processor is malfunctioning.	—	P0613	—
PNP SW/CIRC	• PNP switch signals input with impossible pattern	X	P0705	P0705
ATF TEMP SEN/CIRC	• Normal voltage is not applied to ATF temperature sensor due to open, short, and so on. • During running, the ATF temperature sensor signal voltage is excessively high or low.	X	P0710	P0710
FLUID TEMP SEN	• ATF temperature signal does not change.	—	P0711	P0711*2
TURBINE SENSOR	• Signal from turbine revolution sensor does not input due to open, short, and so on. • Unexpected signal input during running.	X	P0717	P0717
VHCL SPEED SEN-A/T	• Signal from revolution sensor does not input due to open, short, and so on. • Unexpected signal input during running.	X	P0722	P0722
ENG SPD INP PERFOR	• Malfunction is detected in engine speed signal, actual engine torque signal or torque reduction signal that is output from ECM through CAN communication.	X	P0726	P0726
A/T 1ST GR FNCTN	• A/T cannot be shifted to the 1st gear position even if electrical circuit is good.	X	P0731	P0731*2
A/T 2ND GR FNCTN	• A/T cannot be shifted to the 2nd gear position even if electrical circuit is good.	X	P0732	P0732*2
A/T 3RD GR FNCTN	• A/T cannot be shifted to the 3rd gear position even if electrical circuit is good.	X	P0733	P0733*2
A/T 4TH GR FNCTN	• A/T cannot be shifted to the 4th gear position even if electrical circuit is good.	X	P0734	P0734*2
A/T 5TH GR FNCTN	• A/T cannot be shifted to the 5th gear position even if electrical circuit is good.	X	P0735	P0735*2
A/T TCC S/V FNCTN	• A/T cannot perform lock-up even if electrical circuit is good.	X	P0744	P0744*2
PC SOL A(L/PRESS)	• Normal voltage is not applied to solenoid due to open, short, and so on. • TCM detects as irregular by comparing target value with monitor value.	X	P0745	P0745
SHIFT SOL A		X	P0750	P0750
SHIFT SOL B		X	P0755	P0755
SHIFT SOL C		X	P0760	P0760
SFT SOL C STUCK ON	• Condition of shift solenoid valve C is different from monitor value, and relation between gear position and actual gear ratio is irregular.	X	P0762	P0762*2
SHIFT SOL D	• Normal voltage is not applied to solenoid due to open, short, and so on. • TCM detects as irregular by comparing target value with monitor value.	X	P0765	P0765
SHIFT SOL E		X	P0770	P0770
PC SOL B(SFT/PRS)		X	P0775	P0775

Items (CONSULT-III screen terms)	Malfunction is detected when...	TCM self-diagnosis		OBD-II (DTC)
		O/D OFF indicator lamp*3	"TRANSMISSION" with CONSULT-III	MIL indicator lamp*1, "ENGINE" with CONSULT-III or GST
SHIFT	• No rotation change occurs between input (turbine revolution sensor) and output (revolution sensor) and shifting time is long. • Shifting ends immediately. • Condition in malfunction engine revs up usually shifting.	X	P0780	P0780*2
PC SOL C(TCC&SFT)	• Normal voltage is not applied to solenoid due to open, short, and so on. • TCM detects as irregular by comparing target value with monitor value.	X	P0795	P0795
PC SOL C STC ON	• Condition of pressure control solenoid valve C is different from monitor value, and relation between gear position and actual gear ratio or lock-up status is irregular.	X	P0797	P0797*2
GEAR LEVER SWITCH	• Lever switch signal is incorrectly input due to open, short, and so on.	—	P0825	—
TCM POWER INPT SIG	• Voltage supplied to TCM is too low.	—	P0882	P0882
ELEC TH CONTROL	• The electric throttle control system for ECM is in a malfunction, after that TCM inputs the result by CAN commnication.	X	P1726	P1726
NO DTC IS DETECTED. FURTHER TESTING MAY BE REQUIRED.	• No NG item has been detected.	—	X	X

*1: Refer to AT-38, "Malfunction Indicator Lamp (MIL)".

*2: These malfunctions cannot be displayed MIL if another malfunction is assigned to MIL.

*3: Indicate it when performing TCM SELF-DIAGNOSTIC PROCEDURE (NO TOOLS). Refer to AT-74, "Diagnosis Procedure".

*4: If DTC U1000 is displayed with other DTCs, first perform the trouble diagnosis for DTC U1000. Refer to AT-77.

DATA MONITOR MODE

NOTICE:

1. The CONSULT-III electrically displays shift timing and lock-up timing (that is, operation timing of each solenoid).
   Check for time difference between actual shift timing and the CONSULT-III display. If the difference is noticeable, mechanical parts (except solenoids, sensors, etc.) may be malfunctioning. Check mechanical parts using applicable diagnostic procedures.
2. Shift schedule (which implies gear position) displayed on CONSULT-III and that indicated in Service Manual may differ slightly. This occurs because of the following reasons:
- Actual shift schedule has more or less tolerance or allowance,
- Shift schedule indicated in Service Manual refers to the point where shifts start, and
- Gear position displayed on CONSULT-III indicates the point where shifts are completed.
3. Display of solenoid valves on CONSULT-III changes at the start of shifting, while gear position is displayed upon completion of shifting (which is computed by TCM).

Display item list

NOTE:

When malfunction is detected, CONSULT-III performs REAL-TIME DIAGNOSIS.
Also, any malfunction detected while in this mode will be displayed at real time.

X: Standard —: Not applicable

Monitored item (Unit)	Monitor item selection			Remarks
	ECU INPUT SIGNALS	MAIN SIGNALS	SELECTION FROM MENU	
VHCL/S SE-A/T (km/h)	X	X	X	Vehicle speed recognized by the TCM.
VHCL/S SE-MTR* (km/h)	X	—	X	
FLUID TEMP SE* (V)	X	—	X	
FLUID TEMP* (°C)	—	—	X	
COOLAN TEMP* (°C)	—	—	X	Displays status of engine coolant temperature. Signal input with CAN communication line.
BATTERY VOLT* (V)	X	—	X	
ENGINE SPEED* (rpm)	X	X	X	Signal input with CAN communication line.
TURBINE REV* (rpm)	X	—	X	Turbine revolution computed from signal of turbine revolution sensor is displayed.
OUTPUT REV* (rpm)	—	—	X	Output revolution computed from signal of revolution sensor is displayed.
PNP SW A* (ON/OFF)	X	—	X	
PNP SW B* (ON/OFF)	X	—	X	
PNP SW C* (ON/OFF)	X	—	X	
PNP SW PA* (ON/OFF)	X	—	X	
PNP SW PN (ON/OFF)	X	—	X	
MANU MODE SW* (ON/OFF)	X	—	X	Not mounted but displayed.
NON M-MODE SW* (ON/OFF)	X	—	X	
UP SW* (ON/OFF)	X	—	X	
DOWN SW* (ON/OFF)	X	—	X	
RANGE SLCT SW (ON/OFF)	X	—	X	This means lever switch.
BRAKE SW* (ON/OFF)	X	—	X	This means stop lamp switch signal via CAN communication line.
CLSO THL POS (ON/OFF)	X	—	X	Signal input with CAN communication line.
ASCD SIGNAL (ON/OFF)	X	—	X	
ASCD OD OFF (ON/OFF)	X	—	X	
ABS SIGNAL (ON/OFF)	X	—	X	
TCS SIGNAL (ON/OFF)	X	—	X	
TCS GEAR HOLD (ON/OFF)	X	—	X	
TCS SFT CNG (ON/OFF)	—	—	X	Requests TCM for shift schedule change.
LOCK-UP* (ON/OFF)	—	—	X	Always “ON” during lock-up, regardless of types.
SLCT LVR POSI*	—	—	X	Displays “##” when TCM can not judge selector lever position.
MANU GR POSI	—	—	X	Always displays “##”.
GEAR*	—	—	X	Indicates current gear position. When setting in P or N position, indicate by shift solenoid valves. When setting in R position, displays “1”. Displays “##” when TCM can not judge gear position.

Monitored item (Unit)	Monitor item selection			Remarks
	ECU INPUT SIGNALS	MAIN SIGNALS	SELECTION FROM MENU	
NEXT GR POSI	—	—	X	Displays “##” when TCM can not judge gear position.
REDCT DEM SIG (ON/OFF)	—	—	X	Displays status of engine torque reduction demand signal.
TC SLIP RATIO	—	—	X	
SLIP REV (rpm)	—	—	X	Difference between engine speed and torque converter input shaft speed.
ACCELE ANGLE* (%)	X	X	X	Degree of opening for accelerator recognized by the TCM. For fail-safe operation, the specific value used for control is displayed.
PC SOL A OUT* (A)	—	—	X	
PC SOL A MON* (A)	—	X	X	
PC SOL B OUT* (A)	—	—	X	
PC SOL B MON* (A)	—	X	X	
PC SOL C OUT* (A)	—	—	X	
PC SOL C MON* (A)	—	X	X	
SFT SOL A OUT* (ON/OFF)	—	—	X	
SFT SOL B OUT* (ON/OFF)	—	—	X	
SFT SOL C OUT* (ON/OFF)	—	—	X	
SFT SOL D OUT* (ON/OFF)	—	—	X	
SFT SOL E OUT* (ON/OFF)	—	—	X	
SFT SOL A MON* (ON/OFF)	—	X	X	
SFT SOL B MON* (ON/OFF)	—	X	X	
SFT SOL C MON* (ON/OFF)	—	X	X	
SFT SOL D MON* (ON/OFF)	—	X	X	
SFT SOL E MON* (ON/OFF)	—	X	X	
G-RATE (G)	—	—	X	
F-SAFE MODE (OK/1 to 10)	—	X	X	Numbers indicate types of fail-safe modes. Refer to AT-39, "Fail-Safe".
VDC SIGNAL (ON/OFF)	X	—	X	Signal input with CAN communication line.
SHIFT SCHDULE	—	—	X	The details for data of shift schedule are as follow: NOR: Normal mode UP1: Upslope 1 mode UP2: Upslope 2 mode (steeper then “UP1”) DOWN: Downslope mode HOT1: Hot 1 mode HOT2: Hot 2 mode (higher temperature than “HOT1”)
Voltage (V)	—	—	X	Displays the value measured by the voltage probe.

Monitored item (Unit)	Monitor item selection			Remarks
	ECU INPUT SIGNALS	MAIN SIGNALS	SELECTION FROM MENU	
Frequency (Hz)	—	—	X	The value measured by the pulse probe is displayed.
DUTY-HI (high) (%)	—	—	X	
DUTY-LOW (low) (%)	—	—	X	
PLS WIDTH-HI (ms)	—	—	X	
PLS WIDTH-LOW (ms)	—	—	X	

*: Also, the items appear on CONSULT-III screen in freeze frame data mode of self-diagnostic results only if DTC is detected. For details, refer to "SELF-DIAG RESULT MODE".

ACTIVE TEST MODE

Test item

Test item	Condition	Description
SHIFT SOLENOID A	Under the following conditions. • Ignition switch “ON” • Selector lever “P” or “N” position • Engine not running • Vehicle speed is 0 km/h (0 MPH). • Ignition voltage is more than 10.5V. • Malfunction was not detected.*	Each shift solenoid operate ON/OFF by receiving the drive signal.
SHIFT SOLENOID B		
SHIFT SOLENOID C		
SHIFT SOLENOID D		
SHIFT SOLENOID E		
PRESSURE CONTROL SOL A		Each pressure control solenoid is activated by receiving the drive signal.
PRESSURE CONTROL SOL B		
PRESSURE CONTROL SOL C		

*: Except when P0711, P0731, P0732, P0733, P0734, P0735, P0744, P0762, P0780 or P0797 is detected.

NOTE:

Approximately 10 seconds after the operation is begun, “TEST IS STOPPED” will be displayed.

Diagnosis Procedure

INFOID:0000000001717877

OBD-II SELF-DIAGNOSTIC PROCEDURE (WITH CONSULT-III)

Refer to EC-107, "CONSULT-III Function (ENGINE)".

OBD-II SELF-DIAGNOSTIC PROCEDURE (WITH GST)

Refer to EC-117, "Generic Scan Tool (GST) Function".

OBD-II SELF-DIAGNOSTIC PROCEDURE (NO TOOLS)

Refer to EC-59, "Malfunction Indicator Lamp (MIL)".

TCM SELF-DIAGNOSTIC PROCEDURE (WITH CONSULT-III)

Refer to AT-69, "CONSULT-III Function (TRANSMISSION)".

TCM SELF-DIAGNOSTIC PROCEDURE (NO TOOLS)

Description

As a method for locating the suspect system, when the self-diagnostics start signal is input, the memory for the malfunction location is output and the O/D OFF indicator lamp flashes to display the corresponding DTC.

Diagnostic procedure

1. CHECK O/D OFF INDICATOR LAMP

1. Start the engine with selector lever in “P” position. Warm engine to normal operating temperature.
2. Turn ignition switch “ON” and “OFF” at least twice, then leave it in the “OFF” position.
3. Wait 10 seconds.
4. Turn ignition switch “ON”. (Do not start engine.)

Does O/D OFF indicator lamp come on for about 2 seconds?

YES >> GO TO 2.
NO >> GO TO AT-193, "O/D OFF Indicator Lamp Does Not Come On".

2. JUDGEMENT PROCEDURE

NOTE:
After turning ignition switch “ON” (at step 6), perform within 2 seconds (while O/D OFF indicator lamp come on.).

1. Turn ignition switch “OFF”.
2. Push shift lock release button.
3. Move selector lever from “P” to “D” position.
4. Release accelerator pedal. (Set the closed throttle position signal “ON”.)
5. Depress brake pedal. (Stop lamp switch signal “ON”.)
6. Turn ignition switch “ON”.
7. Move the selector lever to the “N” position and release brake pedal. (Stop lamp switch signal “OFF”.)
8. Move the selector lever to “D” position and depress brake pedal. (Stop lamp switch signal “ON”.)
9. Release brake pedal. (Stop lamp switch signal “OFF”.)
10. Depress accelerator pedal fully and release it.

>> GO TO 3.

3. CHECK SELF-DIAGNOSIS CODE

Check O/D OFF indicator lamp.
Refer to "Judgement self-diagnosis code".
If the system does not go into self-diagnostics, refer to AT-209, "TCM Self-Diagnosis Does Not Activate".

>> **DIAGNOSIS END**

Judgement self-diagnosis code
When a malfunction is detected, the malfunction route is indicated by longer illumination of the indicator lamp.

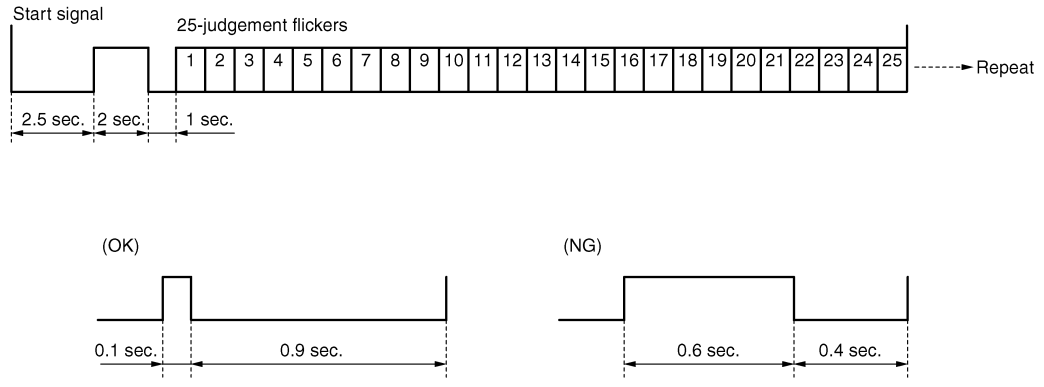

1	Revolution sensor	14	Engine speed signal
2	Turbine revolution sensor	15	Vehicle speed signal
3	Pressure control solenoid valve A	16	CAN communication
4	Pressure control solenoid valve B	17	1st gear function
5	Pressure control solenoid valve C	18	2nd gear function
6	Shift solenoid valve A	19	3rd gear function
7	Shift solenoid valve B	20	4th gear function
8	Shift solenoid valve C	21	5th gear function
9	Shift solenoid valve D	22	Shift solenoid valve C stuck ON
10	Shift solenoid valve E	23	Shift function
11	PNP switch	24	Lock-up function
12	A/T fluid temperature sensor	25	Pressure contnal solenoid valve C stuck ON
13	Electric throttle control system		

If the lamp flashes at 4Hz frequency, the most likely cause is EEP ROM error (Poor memory back up).

SCIA2758E

ERASE SELF-DIAGNOSIS

- In order to make it easier to find the cause of hard-to-duplicate malfunctions, malfunction information is stored into the control unit as necessary during use by the user. This memory is not erased no matter how many times the ignition switch is turned ON and OFF.
- However, this information is erased by turning ignition switch “OFF” after executing self-diagnostics or by erasing the memory using the CONSULT-III.

DTC U1000 CAN COMMUNICATION LINE

Description

INFOID:0000000001717878

CAN (Controller Area Network) is a serial communication line for real time application. It is an on-vehicle multiplex communication line with high data communication speed and excellent malfunction detection ability. Many electronic control units are equipped onto a vehicle, and each control unit shares information and links with other control units during operation (not independent). In CAN communication, control units are connected with 2 communication lines (CAN-H line, CAN-L line) allowing a high rate of information transmission with less wiring. Each control unit transmits/receives data but selectively reads required data only.

On Board Diagnosis Logic

INFOID:0000000001717879

- This is an OBD-II self-diagnostic item.
- Diagnostic trouble code “CAN COMM CIRCUIT” with CONSULT-III or U1000 without CONSULT-III is detected when TCM cannot communicate to other control units.

Possible Cause

INFOID:0000000001717880

Harness or connectors
(CAN communication line is open or shorted.)

DTC Confirmation Procedure

INFOID:0000000001717881

NOTE:
If “DTC Confirmation Procedure” has been previously performed, always turn ignition switch “OFF” and wait at least 10 seconds before performing the next test.
After the repair, perform the following procedure to confirm the malfunction is eliminated.

WITH CONSULT-III

1. Turn ignition switch “ON”. (Do not start engine.)
2. Select “DATA MONITOR” mode for “TRANSMISSION” with CONSULT-III.
3. Start engine.
4. Drive vehicle and maintain the following condition for at least 6 seconds.
   SLCT LVR POSI: “D” position
5. If DTC is detected, go to AT-79, "Diagnosis Procedure".

WITH GST

Follow the procedure “WITH CONSULT-III”.

Wiring Diagram - AT - CAN

INFOID:0000000001717882

AT-CAN-01

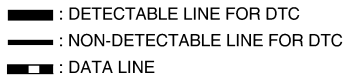

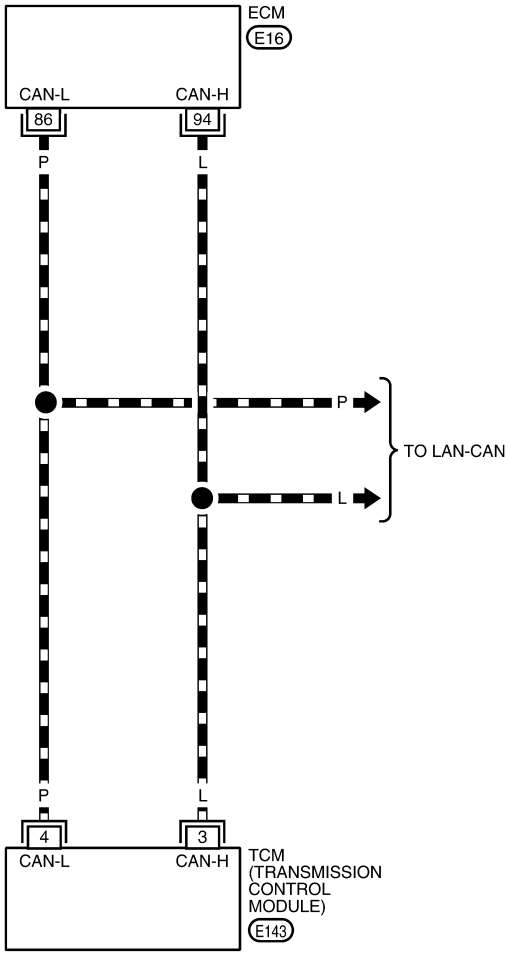

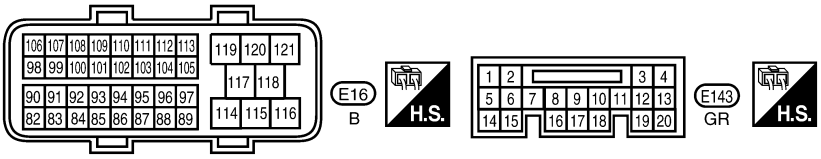

BCWA0604E

TCM Input/Output Signal Reference Values. Refer to AT-66, "TCM Input/Output Signal Reference Value".

Diagnosis Procedure

INFOID:0000000001717883

1. CHECK CAN COMMUNICATION CIRCUIT

With CONSULT-III

1. Turn ignition switch “ON” and start engine.
2. Select “SELF-DIAG RESULTS” mode for “TRANSMISSION” with in CONSULT-III.

Is any malfunction of the "CAN COMM CIRCUIT" indicated?

Yes >> Print out CONSULT-III screen, GO TO LAN-41, "CAN System Specification Chart".

No >> **INSPECTION END**

DTC P0500 VEHICLE SPEED SENSOR MTR

Description

INFOID:0000000001717884

The vehicle speed sensor·MTR signal is transmitted from combination meter to TCM by CAN communication line. The signal functions as an auxiliary device to the revolution sensor when it is malfunctioning. The TCM will then use the vehicle speed sensor·MTR signal.

On Board Diagnosis Logic

INFOID:0000000001717885

- This is not an OBD-II self-diagnostic item.
- Diagnostic trouble code “VEH SPD SE/CIR-MTR” with CONSULT-III or 15th judgement flicker without CONSULT-III is detected when TCM does not receive the proper vehicle speed sensor MTR signal (input by CAN communication) from combination meter.

Possible Cause

INFOID:0000000001717886

- Harness or connectors
  (The signal circuit is open or shorted.)
- Combination meter
- ABS actuator and electric unit (control unit)
- Wheel sensor

DTC Confirmation Procedure

INFOID:0000000001717887

CAUTION:
Always drive vehicle at a safe speed.
NOTE:
If “DTC Confirmation Procedure” has been previously performed, always turn ignition switch “OFF” and wait at least 10 seconds before performing the next test.
After the repair, perform the following procedure to confirm the malfunction is eliminated.

WITH CONSULT-III

1. Turn ignition switch “ON” and select “DATA MONITOR” mode for “TRANSMISSION” with CONSULT-III.
2. Start engine.
3. Drive vehicle and maintain the following conditions for at least 5 consecutive seconds.
   VHCL/S SE-A/T: 30 km/h (17 MPH) or more
   ACCELE ANGLE: 10 % or less
4. If DTC is detected, go to AT-80, "Diagnosis Procedure".

Diagnosis Procedure

INFOID:0000000001717888

1. CHECK INPUT SIGNALS

With CONSULT-III

1. Start engine.
2. Select “DATA MONITOR” mode for “TRANSMISSION” with CONSULT-III.
3. Drive vehicle, and then make sure that the values of “VHCL/S SE-A/T” and “VHCL/S SE-MTR” are same.

OK or NG

OK >> GO TO 4.
NG >> GO TO 2.

2. CHECK DTC WITH ABS ACTUATOR AND ELECTRIC UNIT (CONTROL UNIT)

Refer to BRC-10 (with TCS/ABS) or BRC-50 (with VDC/TCS/ABS).

OK or NG

OK >> GO TO 3.
NG >> If NG, recheck pin terminals for damage or loose connection with harness connector.

3. CHECK DTC WITH COMBINATION METER

Refer to DI-5.

OK or NG

OK >> GO TO 4.
NG >> If NG, recheck pin terminals for damage or loose connection with harness connector.

4. CHECK DTC

Perform “DTC Confirmation Procedure”. Refer to AT-80, "DTC Confirmation Procedure".

OK or NG

OK >> **INSPECTION END**
NG >> GO TO 5.

5. CHECK TCM

1. Check TCM input/output signal.
2. If NG, recheck TCM pin terminals for damage or loose connection with harness connector.

OK or NG

OK >> **INSPECTION END**
NG >> Repair or replace damaged parts.

DTC P0613 TCM PROCESSOR

Description

INFOID:0000000001717889

The TCM consists of a microcomputer and connectors for signal input and output and for power supply. The TCM controls the A/T.

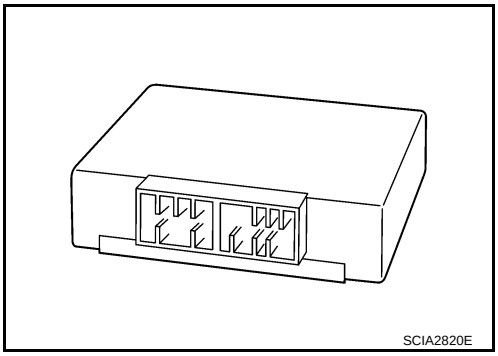

On Board Diagnosis Logic

INFOID:0000000001717890

- This is not an OBD-II self-diagnostic item.
- Diagnostic trouble code “TCM PROCESSOR” with CONSULT-III is detected when TCM processor is malfunctioning.

Possible Cause

INFOID:0000000001717891

TCM

DTC Confirmation Procedure

INFOID:0000000001717892

NOTE:
If “DTC Confirmation Procedure” has been previously performed, always turn ignition switch “OFF” and wait at least 10 seconds before performing the next test.
After the repair, perform the following procedure to confirm the malfunction is eliminated.

WITH CONSULT-III

1. Turn ignition switch “ON”. (Do not start engine.)
2. Select “DATA MONITOR” mode for “TRANSMISSION” with CONSULT-III.
3. Start engine.
4. Run engine for at least 2 consecutive seconds at idle speed.
5. If DTC is detected, go to AT-82, "Diagnosis Procedure".

Diagnosis Procedure

INFOID:0000000001717893

1. CHECK DTC

With CONSULT-III

1. Turn ignition switch “ON”. (Do not start engine.)
2. Select “SELF-DIAG RESULTS” mode for “TRANSMISSION” with CONSULT-III.
3. Touch “ERASE”.
4. Turn ignition switch “OFF” and wait at least 10 seconds.
5. Perform DTC confirmation procedure, AT-82, "DTC Confirmation Procedure".

Is the “TCM PROCESSOR” displayed again?

YES >> Replace TCM.
NO >> **INSPECTION END**

DTC P0705 PARK/NEUTRAL POSITION SWITCH

Description

INFOID:0000000001717894

- The park/neutral position (PNP) switch includes a transmission range switch.
- The transmission range switch detects the selector lever position and sends a signal to the TCM.
- TCM judges the selector lever position by the park/neutral position (PNP) switch signal.

Selector lever	PNP switch A	PNP switch B	PNP switch C	PNP switch PA	PNP switch PN
P	ON	OFF	OFF	ON	ON
R	ON	ON	OFF	OFF	OFF
N	OFF	ON	OFF	ON	ON
D	OFF	ON	ON	OFF	OFF
L	ON	ON	ON	ON	OFF

On Board Diagnosis Logic

INFOID:0000000001717895

- This is an OBD-II self-diagnostic item.
- Diagnostic trouble code “PNP SW/CIRC” with CONSULT-III or P0705 without CONSULT-III is detected when PNP switch signals input with impossible pattern.

Possible Cause

INFOID:0000000001717896

- Harness or connectors
  [The park/neutral position (PNP) switch and TCM circuit is open or shorted.]
- Park/neutral position (PNP) switch

DTC Confirmation Procedure

INFOID:0000000001717897

NOTE:
If “DTC Confirmation Procedure” has been previously performed, always turn ignition switch “OFF” and wait at least 10 seconds before performing the next test.
After the repair, perform the following procedure to confirm the malfunction is eliminated.

WITH CONSULT-III

1. Turn ignition switch “ON”. (Do not start engine.)
2. Select “DATA MONITOR” mode for “TRANSMISSION” with CONSULT-III.
3. Move selector lever to each position.
   SLCT LVR POSI: “P”, “R”, “N”, “D” or “L” position
4. Wait for at least 5 consecutive seconds at each position.
5. If DTC is detected, go to AT-85, "Diagnosis Procedure".

WITH GST

Follow the procedure “With CONSULT-III”.

Wiring Diagram - AT - PNP/SW

INFOID:0000000001717898

AT-PNP/SW-01

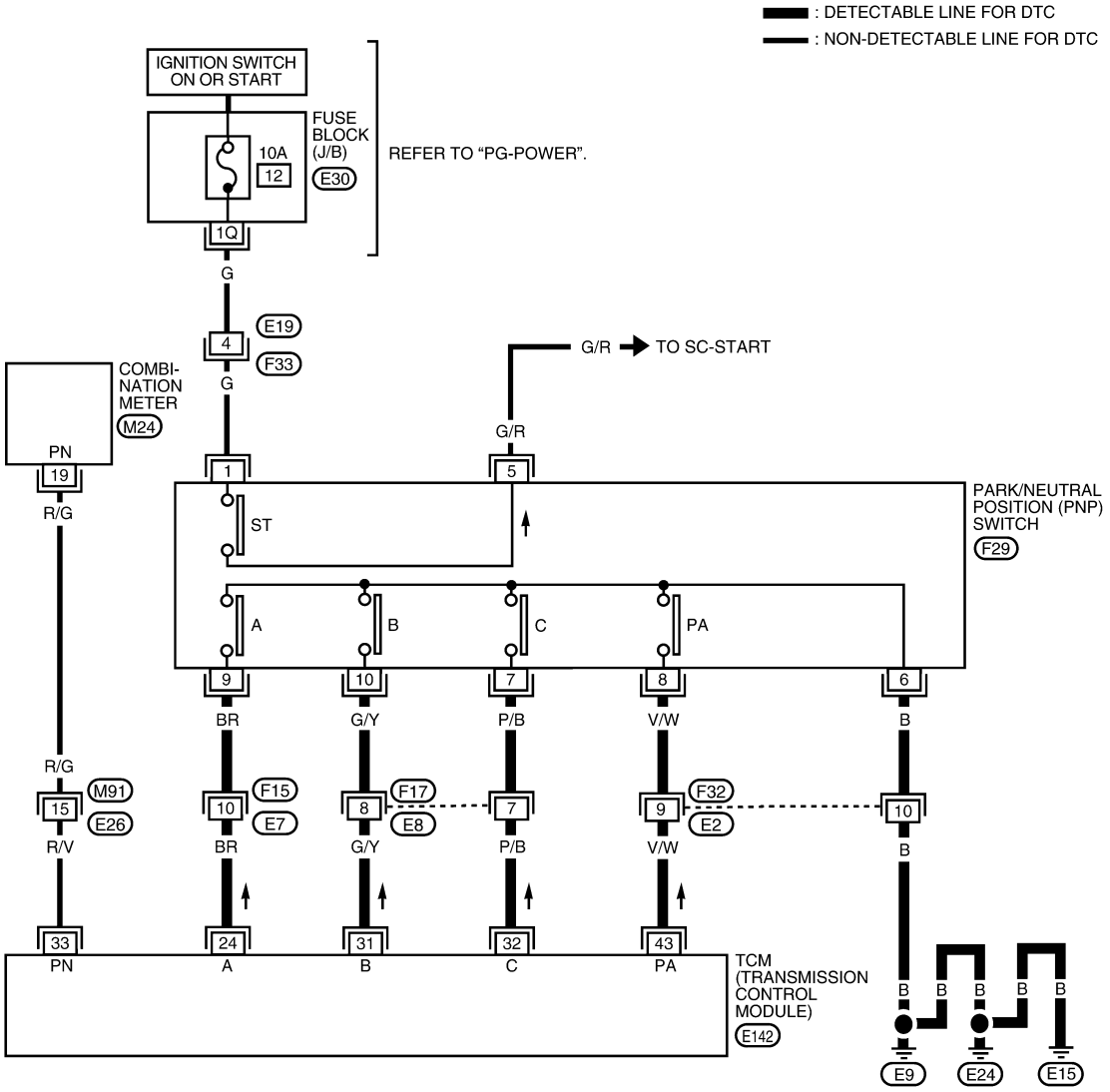

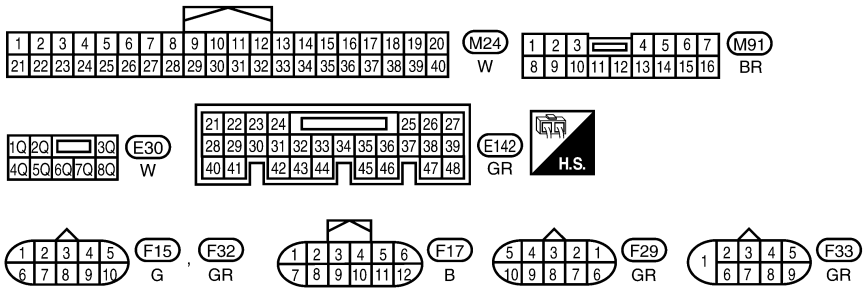

BCWA0595E

TCM Input/Output Signal Reference Values. Refer to AT-66, "TCM Input/Output Signal Reference Value".

Diagnosis Procedure

INFOID:0000000001717899

1. CHECK PNP SWITCH CIRCUIT

With CONSULT-III

1. Turn ignition switch “ON”. (Do not start engine.)
2. Select “DATA MONITOR” mode for “TRANSMISSION” with CONSULT-III.
3. Move selector lever to “P”, “R”, “N”, “D” and “L” position and check the value of “PNP SW A”, “PNP SW B”, “PNP SW C”, “PNP SW PA” and “PNP SW PN”.

Selector lever	“PNP SW A”	“PNP SW B”	“PNP SW C”	“PNP SW PA”	“PNP SW PN”
P	ON	OFF	OFF	ON	ON
R	ON	ON	OFF	OFF	OFF
N	OFF	ON	OFF	ON	ON
D	OFF	ON	ON	OFF	OFF
L	ON	ON	ON	ON	OFF

Without CONSULT-III

1. Turn ignition switch “ON”. (Do not start engine.)
2. Move selector lever to “P”, “R”, “N”, “D” and “L” position and check voltage between the TCM connector terminals and ground.

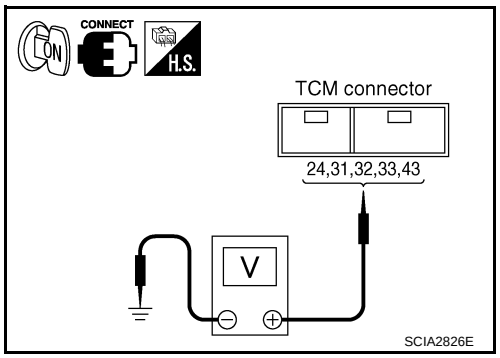

Selector lever	Connector No.		E142		
	Terminal				
	24 - Ground	31 - Ground	32 - Ground	33 - Ground	43 - Ground
P	0V	Battery voltage	Battery voltage	Battery voltage	0V
R	0V	0V	Battery voltage	0V	Battery voltage
N	Battery voltage	0V	Battery voltage	Battery voltage	0V
D	Battery voltage	0V	0V	0V	Battery voltage
L	0V	0V	0V	0V	0V

OK or NG

OK >> GO TO 5.
NG >> GO TO 2.

2. CHECK PNP SWITCH POWER SOURCE CIRCUIT

1. Turn ignition switch “OFF”.
2. Disconnect the PNP switch connector.
3. Turn ignition switch “ON”. (Do not start engine.)
4. Check the voltage between PNP switch connector terminal 1 and ground.

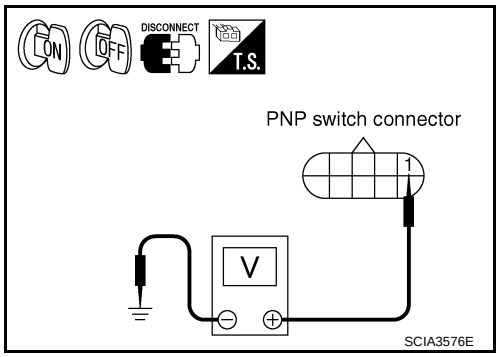

Connector	Terminal	Voltage
F29	1 - Ground	Battery voltage

5. Turn ignition switch “OFF”.
6. Check voltage between PNP switch connector terminal 1 and ground.

Connector	Terminal	Voltage
F29	1 - Ground	0V

7. If OK, check harness for short-circuit to ground or power source.

OK or NG

OK >> GO TO 3.
NG >> Check the following. If any items are damaged, repair or replace damaged parts.
- Harness for short or open between ignition switch and PNP switch
- Ignition switch and fuse
  Refer to PG-3.

3. CHECK HARNESS BETWEEN TCM AND PNP SWITCH

1. Turn ignition switch “OFF”.
2. Disconnect the TCM connector and PNP switch connector.
3. Check continuity between TCM connector terminals 24, 31, 32, 43 and ground.

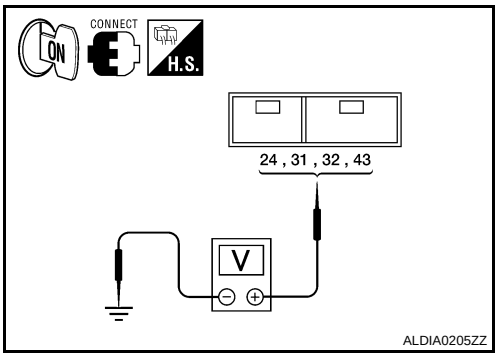

Connector	Terminal	Condition	Continuity
E142	24 - Ground	Selector lever: “P”, “R” and “L” position	Yes
		Other than the above	No
	31 - Ground	Selector lever: “R”, “N”, “D” and “L” position	Yes
		Other than the above	No
	32 - Ground	Selector lever: “D” and “L” position	Yes
		Other than the above	No
	43 - Ground	Selector lever: “P”, “N” and “L” position	Yes
		Other than the above	No

4. If OK, check the following.
- Harness for short-circuit to ground or power source.
- Open or short-circuit in the harness between combination meter and TCM.

OK or NG

OK >> GO TO 5.
NG >> GO TO 4.

4. DETECT MALFUNCTIONING ITEM

Check the following.
- Open or short-circuit in the harness between TCM and PNP switch A, B, C, PA.
- Open or short-circuit in the harness for ground of PNP switch.
- PNP switch. Refer to AT-87, "Component Inspection".

OK or NG

OK >> GO TO 6.
NG >> Repair or replace damaged parts.

5. CHECK DTC

Perform “DTC Confirmation Procedure”. Refer to AT-83, "DTC Confirmation Procedure".

OK or NG

OK >> **INSPECTION END**
NG >> GO TO 6.

6. CHECK TCM

1. Check TCM input/output signal. Refer to AT-66, "TCM Input/Output Signal Reference Value".
2. If NG, recheck TCM pin terminals for damage or loose connection with harness connector.

OK or NG

OK >> **INSPECTION END**
NG >> Repair or replace damaged parts.

Component Inspection

INFOID:0000000001717900

PNP SWITCH

1. Check continuity between PNP switch terminals while moving selector lever. Refer to the following table.

Circuit	Starter		Reverse		Position				
	+	−	+	−	−	A	B	C	PA
Terminal / Lever position	1	5	2	4	6	9	10	7	8
P	○—○				○—○				○
R			○—○		○—○		○		
N	○—○				○		○		○
D					○		○	○	
L					○—○		○	○	○

○—○ : Continuity

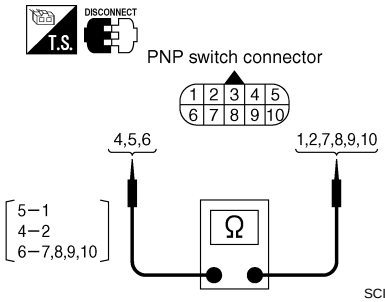

2. If NG, check again with control cable disconnected. (Refer to step 1 above.)
3. If OK on step 2, adjust control cable. Refer to AT-221, "Control Cable Adjustment".
4. If NG on step 2, remove park/neutral position (PNP) switch from A/T and check continuity of park/neutral position (PNP) switch terminals. (Refer to step 1 above.)
5. If OK on step 4, adjust park/neutral position (PNP) switch. Refer to AT-219, "Park/Neutral Position (PNP) Switch Adjustment".
6. If NG on step 4, replace park/neutral position (PNP) switch.

DTC P0710 A/T FLUID TEMPERATURE SENSOR CIRCUIT

Description

INFOID:0000000001717901

The A/T fluid temperature sensor detects the A/T fluid temperature and sends a signal to the TCM.

On Board Diagnosis Logic

INFOID:0000000001717902

- This is an OBD-II self-diagnostic item.
- Diagnostic trouble code “ATF TEMP SEN/CIRC” with CONSULT-III or P0710 without CONSULT-III is detected under the following conditions.
- When normal voltage not applied to ATF temperature sensor due to open, short, and so on.
- When during running, the ATF temperature sensor signal voltage is excessively high or low.

Possible Cause

INFOID:0000000001717903

- Harness or connectors
  (The sensor circuit is open or shorted.)
- A/T fluid temperature sensor

DTC Confirmation Procedure

INFOID:0000000001717904

NOTE:
If “DTC Confirmation Procedure” has been previously performed, always turn ignition switch “OFF” and wait at least 10 seconds before performing the next test.
After the repair, perform the following procedure to confirm the malfunction is eliminated.

WITH CONSULT-III

1. Turn ignition switch “ON”. (Do not start engine.)
2. Select “DATA MONITOR” mode for “TRANSMISSION” with CONSULT-III.
3. Start engine.
4. Warm up engine so that engine coolant temperature is more than 50°C (122°F).
   COOLAN TEMP: More than 50°C (122°F)
5. Maintain the following conditions for at least 16 minutes (Total). (It is not necessary to drive vehicle.)
   COOLAN TEMP: More than 50°C (122°F)
   SLCT LVR POSI: “D” position
6. If DTC is detected, go to AT-90, "Diagnosis Procedure".

WITH GST

Follow the procedure “With CONSULT-III”.

Wiring Diagram - AT - FTS

INFOID:0000000001717905

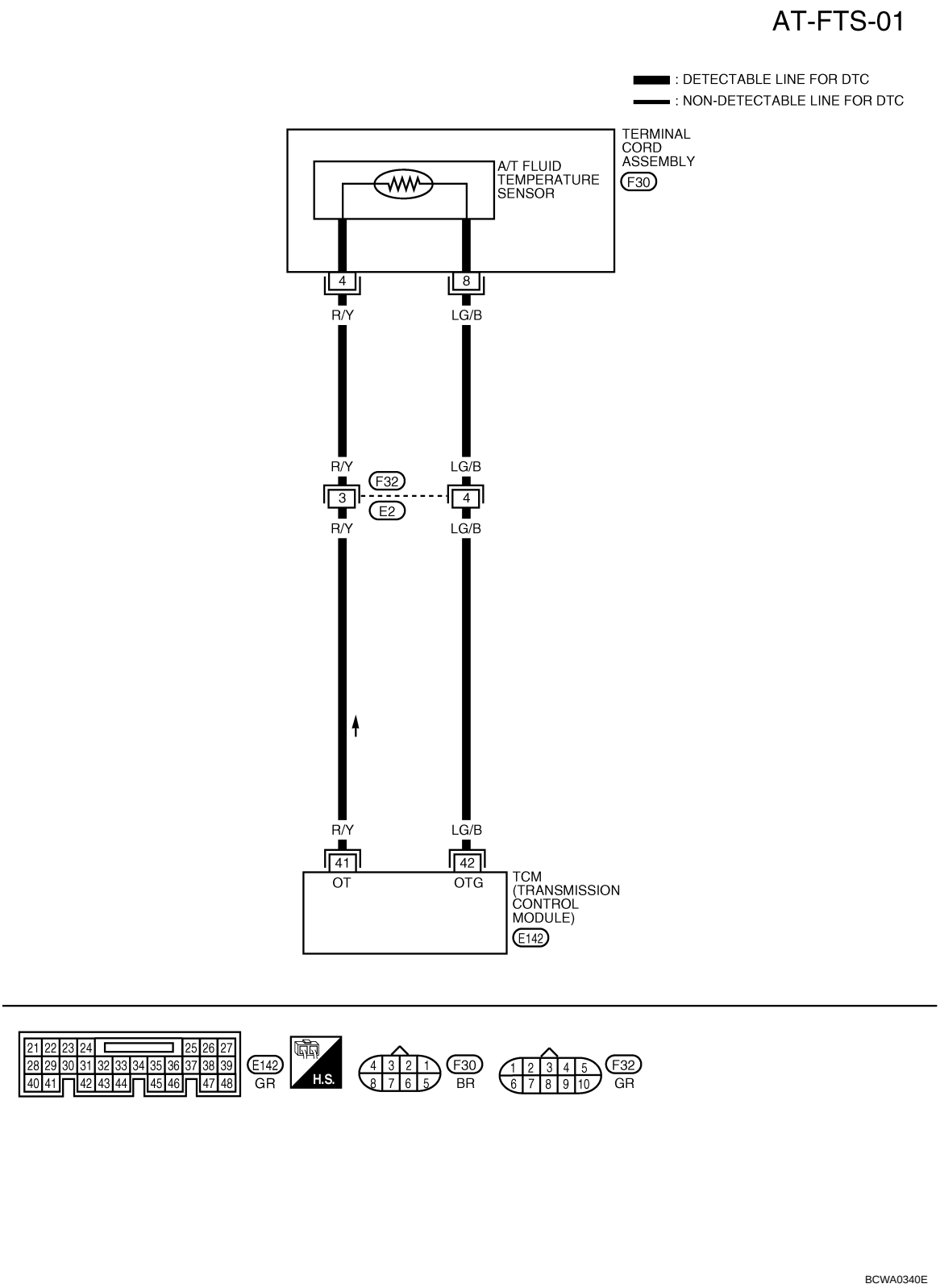

TCM Input/Output Signal Reference Values. Refer to AT-66, "TCM Input/Output Signal Reference Value".

Diagnosis Procedure

INFOID:0000000001717906

1. CHECK FLUID TEMPERATURE SENSOR SIGNAL

With CONSULT-III

1. Start engine.
2. Select “DATA MONITOR” mode for “TRANSMISSION” with CONSULT-III.
3. Read out the value of “FLUID TEMP SE”.

Item name	Condition	Display value (Approx.)
Fluid temperature sensor	0°C (32°F)	4.0V
	20°C (68°F)	3.0V
	80°C (176°F)	0.8V
	100°C (212°F)	0.5V

Without CONSULT-III

1. Start engine.
2. Check voltage between TCM connector terminals 41 and 42 while warming up A/T. Refer to AT-89, "Wiring Diagram - AT - FTS".

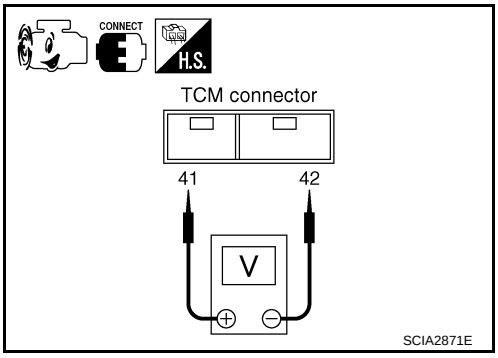

Connector	Terminal	Temperature	Voltage (Approx.)
E142	41 - 42 (ground)	0°C (32°F)	4.0V
		20°C (68°F)	3.0V
		80°C (176°F)	0.8V
		100°C (212°F)	0.5V

3. Turn ignition switch “OFF”.
4. Disconnect the TCM connector.
5. Check if there is continuity between the connector terminal and ground.

OK or NG

OK >> GO TO 6.
NG >> GO TO 2.

2. CHECK FLUID TEMPERATURE SENSOR CIRCUIT

1. Turn ignition switch “OFF”.
2. Disconnect the TCM connector.
3. Check resistance between terminals 41 and 42.

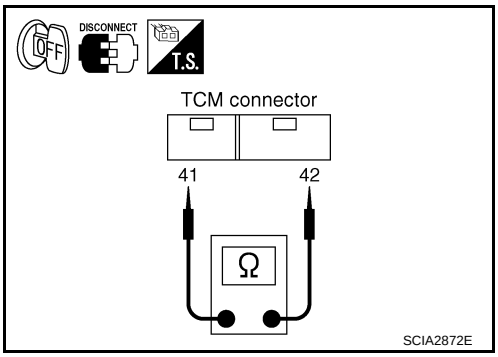

Connector	Terminal	Temperature	Resistance (Approx.)
E142	41 - 42 (ground)	0°C (32°F)	9.8 kΩ
		20°C (68°F)	4.2 kΩ
		80°C (176°F)	0.54 kΩ
		100°C (212°F)	0.31 kΩ

4. Check if there is continuity between the connector terminal and ground.

OK or NG

OK >> GO TO 6.
NG >> GO TO 3.

3. CHECK TERMINAL CORD ASSEMBLY WITH A/T FLUID TEMPERATURE SENSOR

1. Turn ignition switch “OFF”.
2. Disconnect terminal cord assembly harness connector.

3. Check resistance between terminals 4 and 8.

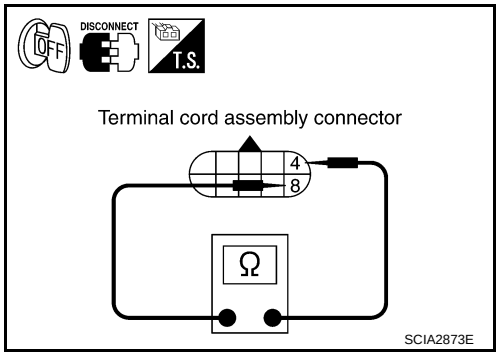

Connector	Terminal	Temperature	Resistance (Approx.)
F30	4 - 8	0°C (32°F)	9.8 kΩ
		20°C (68°F)	4.2 kΩ
		80°C (176°F)	0.54 kΩ
		100°C (212°F)	0.31 kΩ

OK or NG

OK >> GO TO 4.
NG >> GO TO 5.

4. CHECK HARNESS BETWEEN TCM AND TERMINAL CORD ASSEMBLY

Check the following.
- Open or short-circuit in the harness between TCM and terminal cord assembly.

OK or NG

OK >> GO TO 6.
NG >> Repair or replace damaged parts.

5. CHECK A/T FLUID TEMPERATURE SENSOR

1. Remove side cover. Refer to AT-222, "Side cover".
2. Disconnect A/T fluid temperature sensor.
3. Check resistance between terminals 4 and 8.

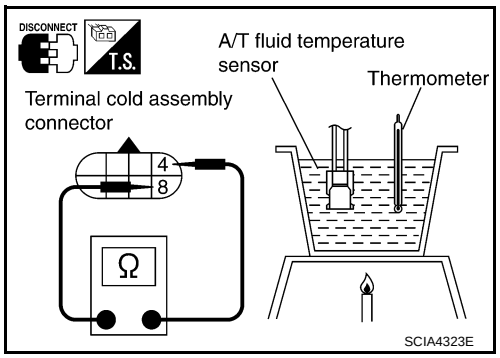

Connector	Terminal	Temperature	Resistance
F30	4 - 8	10°C (°F)	5.80 - 7.09kΩ
		110°C (°F)	0.23 - 0.26kΩ

OK or NG

OK >> GO TO 6.
NG >> Repair or replace transmission wire. Refer to AT-222, "Transmission wire".

6. CHECK DTC

Perform “DTC Confirmation Procedure”. Refer to AT-88, "DTC Confirmation Procedure".

OK or NG

OK >> **INSPECTION END**
NG >> GO TO 7.

7. CHECK TCM

1. Check TCM input/output signal. Refer to AT-66, "TCM Input/Output Signal Reference Value".
2. If NG, recheck TCM pin terminals for damage or loose connection with harness connector.

OK or NG

OK >> **INSPECTION END**
NG >> Repair or replace damaged parts.

Component Inspection

INFOID:0000000001717907

A/T FLUID TEMPERATURE SENSOR

1. Remove side cover. Refer to AT-222, "Side cover".
2. Disconnect A/T fluid temperature sensor.

3. Check resistance between terminals 4 and 8.

Connector	Terminal	Temperature	Resistance
F30	4 - 8	10°C (°F)	5.80 - 7.09kΩ
		110°C (°F)	0.23 - 0.26kΩ

4. If NG, repair and replace transmission wire. Refer to AT-222, "Transmission wire".

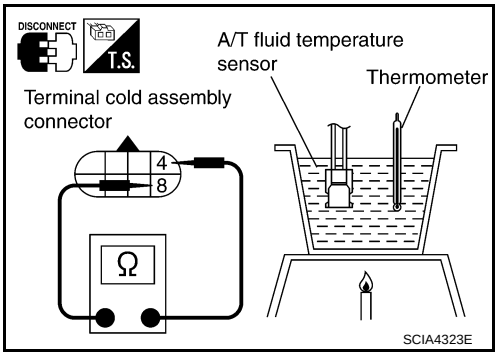

DTC P0711 FLUID TEMPERATURE SENSOR PERFORMANCE

Description

INFOID:0000000001717908

The A/T fluid temperature sensor detects the A/T fluid temperature and sends a signal to the TCM.

On Board Diagnosis Logic

INFOID:0000000001717909

- This is an OBD-II self-diagnostic item.
- Diagnostic trouble code “FLUID TEMP SEN” with CONSULT-III or P0711 without CONSULT-III is detected when ATF temperature signal does not change.

Possible Cause

INFOID:0000000001717910

- Harness or connectors
  (The sensor circuit is open or shorted.)
- A/T fluid temperature sensor

DTC Confirmation Procedure

INFOID:0000000001717911

CAUTION:
Always drive vehicle at a safe speed.
NOTE:
If “DTC Confirmation Procedure” has been previously performed, always turn ignition switch “OFF” and wait at least 10 seconds before performing the next test.
After the repair, perform the following procedure to confirm the malfunction is eliminated.

WITH CONSULT-III

1. Turn ignition switch “ON”. (Do not start engine.)
2. Select “DATA MONITOR” mode for “TRANSMISSION” with CONSULT-III.
3. Start engine.
4. Drive vehicle and maintain the following conditions for at least 15 minutes (Total). (It is not necessary to maintain continuously.)
   VHCL SPEED SE-A/T: 40 km/h (25 MPH) or more
   SLCT LVR POSI: “D” position
5. If DTC is detected, go to AT-95, "Diagnosis Procedure".

WITH GST

Follow the procedure “With CONSULT-III”.

Wiring Diagram - AT - FTSP

INFOID:0000000001717912

AT-FTSP-01

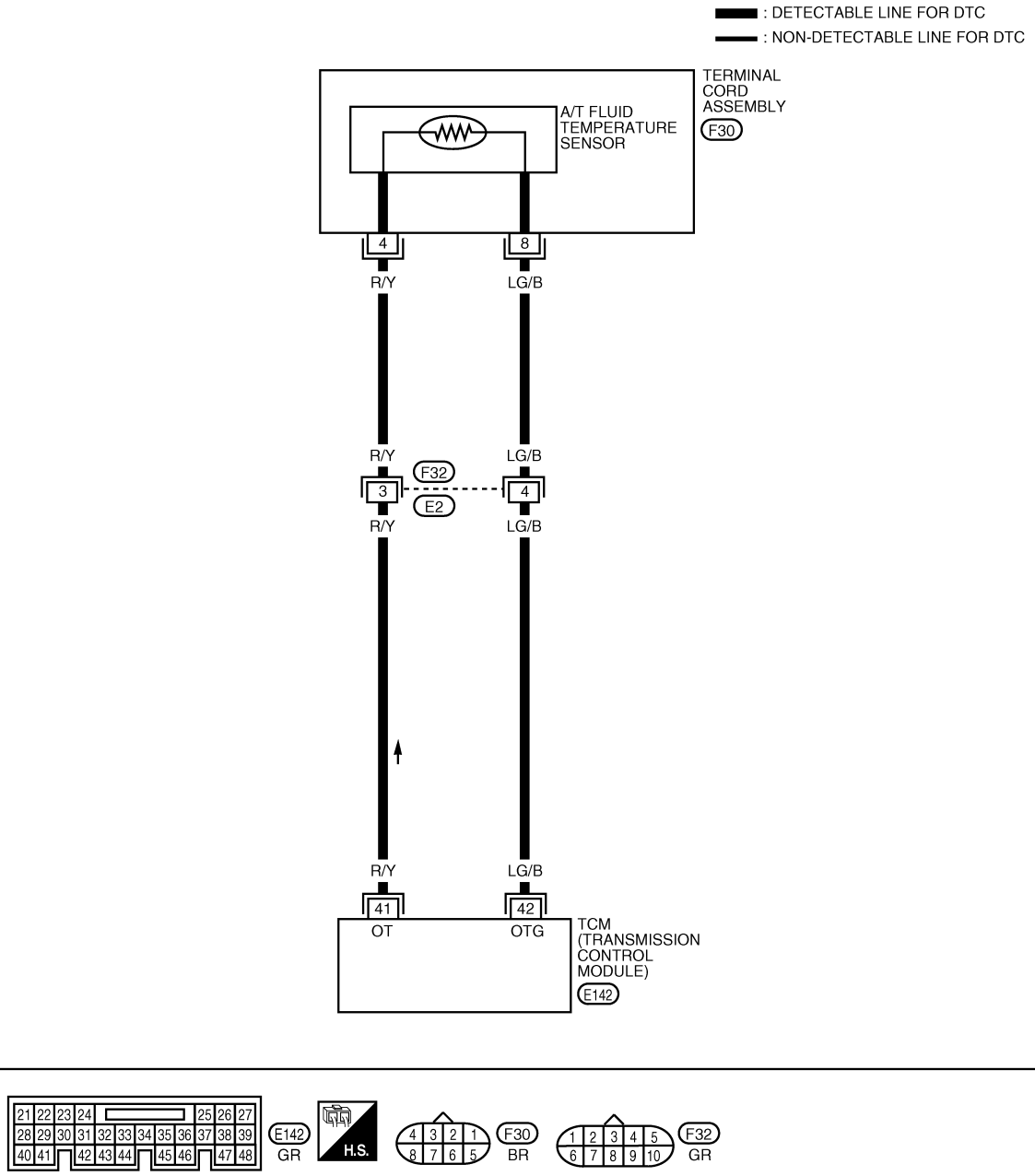

TCM Input/Output Signal Reference Values. Refer to AT-66, "TCM Input/Output Signal Reference Value" .

Diagnosis Procedure

INFOID:0000000001717913

1. CHECK FLUID TEMPERATURE SENSOR SIGNAL

With CONSULT-III

1. Start engine.
2. Select “DATA MONITOR” mode for “TRANSMISSION” with CONSULT-III.
3. Read out the value of “FLUID TEMP SE”.

Item name	Condition	Display value (Approx.)
Fluid temperature sensor	0°C (32°F)	4.0V
	20°C (68°F)	3.0V
	80°C (176°F)	0.8V
	100°C (212°F)	0.5V

Without CONSULT-III

1. Start engine.
2. Check voltage between TCM connector terminals 41 and 42 while warming up A/T. Refer to AT-94, "Wiring Diagram - AT - FTSP".

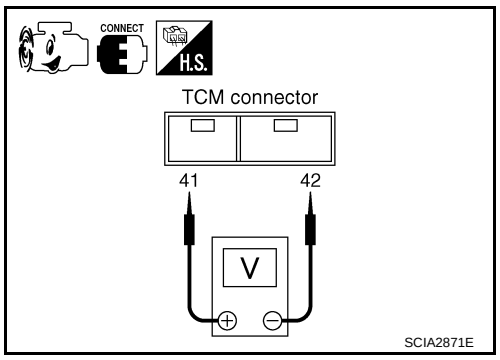

Connector	Terminal	Temperature	Voltage (Approx.)
E142	41 - 42 (ground)	0°C (32°F)	4.0V
		20°C (68°F)	3.0V
		80°C (176°F)	0.8V
		100°C (212°F)	0.5V

3. Turn ignition switch “OFF”.
4. Disconnect the TCM connector.
5. Check if there is continuity between the connector terminal and ground.

OK or NG

OK >> GO TO 6.
NG >> GO TO 2.

2. CHECK FLUID TEMPERATURE SENSOR CIRCUIT

1. Turn ignition switch “OFF”.
2. Disconnect the TCM connector.
3. Check resistance between terminals 41 and 42.

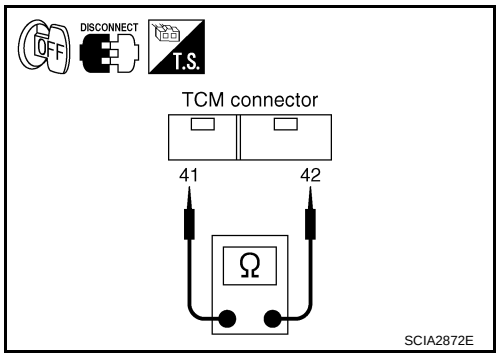

Connector	Terminal	Temperature	Resistance (Approx.)
E142	41 - 42 (ground)	0°C (32°F)	9.8 kΩ
		20°C (68°F)	4.2 kΩ
		80°C (176°F)	0.54 kΩ
		100°C (212°F)	0.31 kΩ

4. Check if there is continuity between the connector terminal and ground.

OK or NG

OK >> GO TO 6.
NG >> GO TO 3.

3. CHECK TERMINAL CORD ASSEMBLY WITH A/T FLUID TEMPERATURE SENSOR

1. Turn ignition switch “OFF”.
2. Disconnect terminal cord assembly harness connector.

3. Check resistance between terminals 4 and 8.

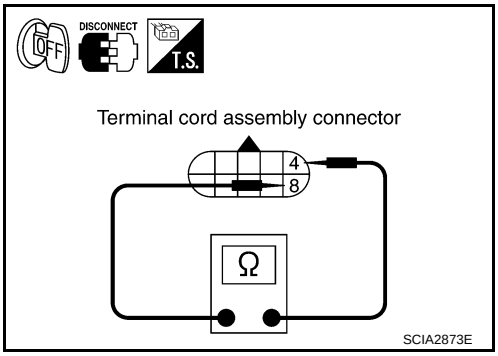

Connector	Terminal	Temperature	Resistance (Approx.)
F30	4 - 8	0°C (32°F)	9.8 kΩ
		20°C (68°F)	4.2 kΩ
		80°C (176°F)	0.54 kΩ
		100°C (212°F)	0.31 kΩ

4. Reinstall any part removed.

OK or NG

OK >> GO TO 4.
NG >> GO TO 5.

4. CHECK HARNESS BETWEEN TCM AND TERMINAL CORD ASSEMBLY

Check the following.
- Open or short-circuit in the harness between TCM and terminal cord assembly.

OK or NG

OK >> GO TO 6.
NG >> Repair or replace damaged parts.

5. CHECK A/T FLUID TEMPERATURE SENSOR

1. Remove side cover. Refer to AT-222, "Side cover".
2. Disconnect A/T fluid temperature sensor.
3. Check resistance between terminals 4 and 8.

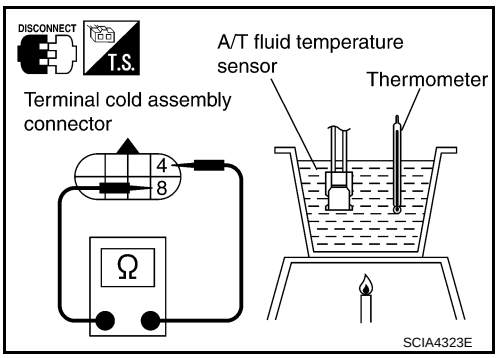

Connector	Terminal	Temperature	Resistance
F30	4 - 8	10°C (°F)	5.80 - 7.09kΩ
		110°C (°F)	0.23 - 0.26kΩ

OK or NG

OK >> GO TO 6.
NG >> Repair or replace transmission wire. Refer to AT-222, "Transmission wire".

6. CHECK DTC

Perform “DTC Confirmation Procedure”. Refer to AT-93, "DTC Confirmation Procedure".

OK or NG

OK >> **INSPECTION END**
NG >> GO TO 7.

7. CHECK TCM

1. Check TCM input/output signal. Refer to AT-66, "TCM Input/Output Signal Reference Value".
2. If NG, recheck TCM pin terminals for damage or loose connection with harness connector.

OK or NG

OK >> **INSPECTION END**
NG >> Repair or replace damaged parts.

Component Inspection

INFOID:0000000001717914

A/T FLUID TEMPERATURE SENSOR

1. Remove side cover. Refer to AT-222, "Side cover".
2. Disconnect A/T fluid temperature sensor.

3. Check resistance between terminals 4 and 8.

Connector	Terminal	Temperature	Resistance
F30	4 - 8	10°C (°F)	5.80 - 7.09kΩ
		110°C (°F)	0.23 - 0.26kΩ

4. If NG, repair or replace transmission wire. Refer to AT-222, "Transmission wire".

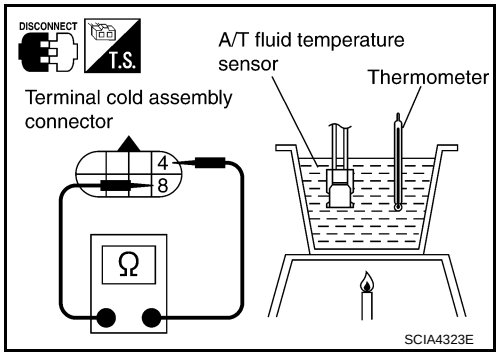

DTC P0717 TURBINE REVOLUTION SENSOR CIRCUIT

Description

INFOID:0000000001717915

- The turbine revolution sensor detects forward clutch drum rpm (revolutions per minute). It is located on the input side of the automatic transaxle. The revolution sensor is located on the output side of the automatic transaxle. With the two sensors, input and output rpms are accurately detected. The result is optimal shift timing during deceleration and improved shifting.
- Hall IC is installed in turbine revolution sensor, it itself handles in pulse of rectangular wave signal and transmits it to TCM due to hall effect. TCM recognizes the pulse with input rpm speed. Size of output doesn't depend on a rotation number and is fixed.

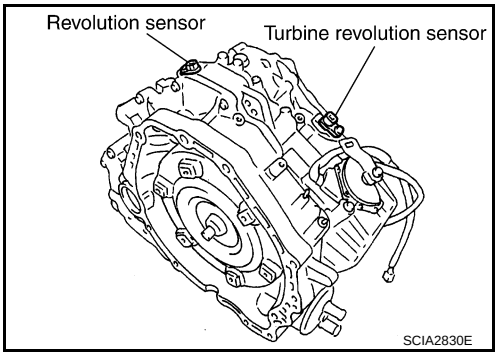

On Board Diagnosis Logic

INFOID:0000000001717916

- This is an OBD-II self-diagnostic item.
- Diagnostic trouble code “TURBINE SENSOR” with CONSULT-III or P0717 without CONSULT-III is detected under the following conditions.
- When signal from turbine revolution sensor does not input due to open, short, and so on.
- When unexpected signal input during running.

Possible Cause

INFOID:0000000001717917

- Harness or connectors
  (The sensor circuit is open or shorted.)
- Turbine revolution sensor

DTC Confirmation Procedure

INFOID:0000000001717918

CAUTION:
Always drive vehicle at a safe speed.
NOTE:
If “DTC Confirmation Procedure” has been previously performed, always turn ignition switch “OFF” and wait at least 10 seconds before performing the next test.
After the repair, perform the following procedure to confirm the malfunction is eliminated.

WITH CONSULT-III

1. Turn ignition switch “ON”. (Do not start engine.)
2. Select “DATA MONITOR” mode for “TRANSMISSION” with CONSULT-III.
3. Start engine.
4. Drive vehicle and maintain the following conditions for at least 1 consecutive minute.
   FLUID TEMP: More than 20°C (68°F)
   VHCL/S SE-A/T: 70 km/h (43 MPH) or more
   SLCT LVR POSI: “D” position
   GEAR: Except 1st position
5. If DTC is detected, go to AT-100, "Diagnosis Procedure".

WITH GST

Follow the procedure “With CONSULT-III”.

Wiring Diagram - AT - TRSC

INFOID:0000000001717919

AT-TRSC-01

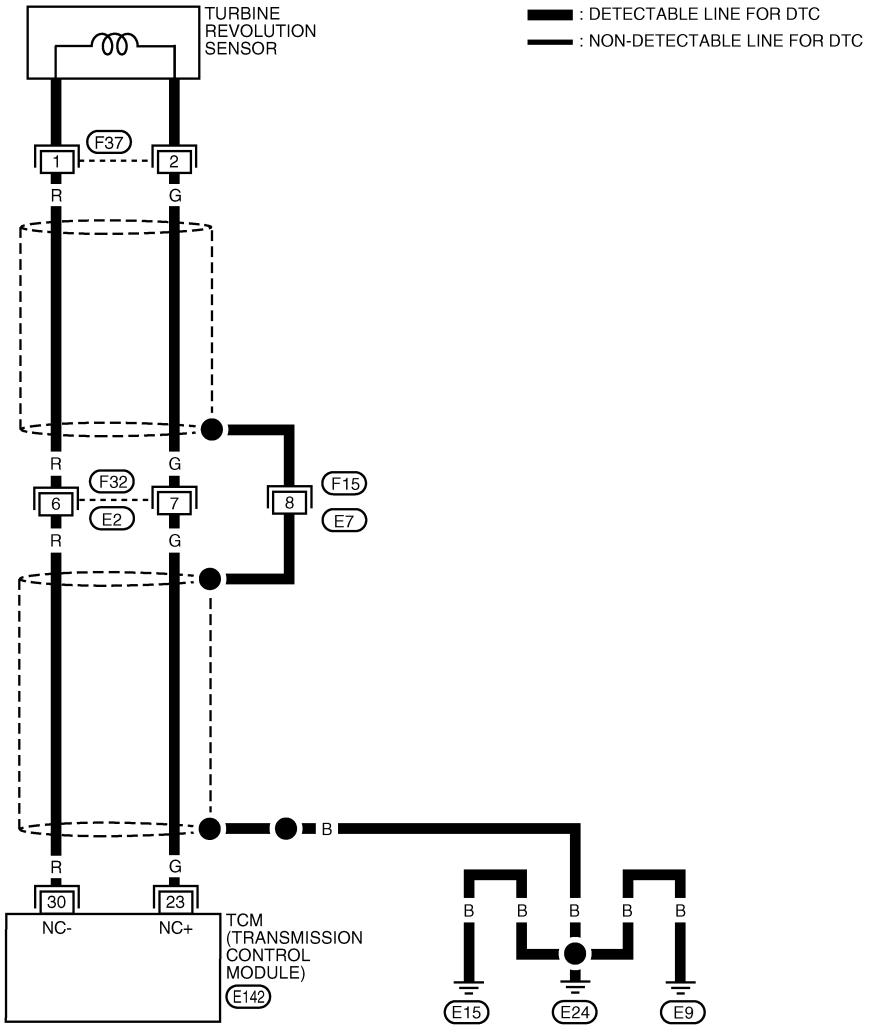

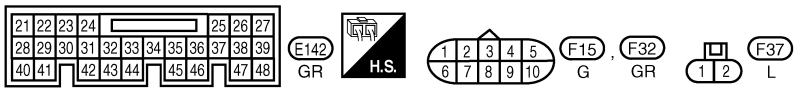

BCWA0342E

TCM Input/Output Signal Reference Values. Refer to AT-66, "TCM Input/Output Signal Reference Value".

Diagnosis Procedure

INFOID:0000000001717920

1. CHECK TURBINE REVOLUTION SENSOR CIRCUIT

With CONSULT-III

1. Start engine.
2. Select “DATA MONITOR” mode for “TRANSMISSION” with CONSULT-III.
3. Drive vehicle and read out the value of “TURBINE REV”.

Monitor item	Condition	Specification
TURBINE REV	During driving (lock-up ON)	Approximately matches the engine speed.

Without CONSULT-III

1. Start the engine.
2. Check pulse between TCM connector terminals 23 and 30.

Connector	Terminal	Condition	Data (Approx.)
E142	23 - 30 (ground)	When moving at 20 km/h (12 MPH) in 1st gear.	371 Hz

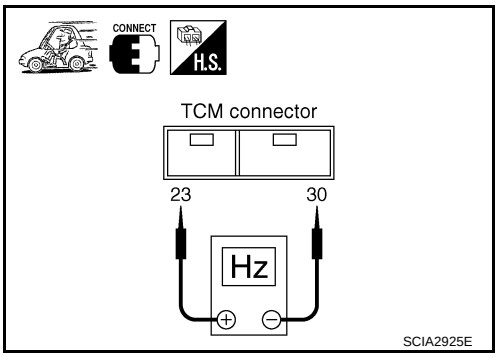

OK or NG

OK >> GO TO 3.
NG >> GO TO 2.

2. DETECT MALFUNCTIONING ITEM

Check the following.

- Open or short-circuit in the harness between TCM and turbine revolution sensor.
- Turbine revolution sensor. Refer to AT-100, "Component Inspection".

OK or NG

OK >> GO TO 3.
NG >> Repair or replace damaged parts.

3. CHECK DTC

Perform “DTC Confirmation Procedure”. Refer to AT-98, "DTC Confirmation Procedure".

OK or NG

OK >> **INSPECTION END**
NG >> GO TO 4.

4. CHECK TCM

1. Check TCM input/output signal. Refer to AT-66, "TCM Input/Output Signal Reference Value".
2. If NG, recheck TCM pin terminals for damage or loose connection with harness connector.

OK or NG

OK >> **INSPECTION END**
NG >> Repair or replace damaged parts.

Component Inspection

INFOID:0000000001717921

TURBINE REVOLUTION SENSOR

1. Remove turbine revolution sensor.

2. Connect 12V power supply and 100 Ω resistance to the terminal. (Do not mistake polarity)
3. Inspect the voltage of HIGH and LOW signal by shaking magnetic body from side to side at turbine revolution sensor tip [gap is within 5 mm (0.20 in)].

   CAUTION:
   Make sure to shake direction from bolt hole to sensor-self when shaking magnetic body. If not, voltage value cannot change.

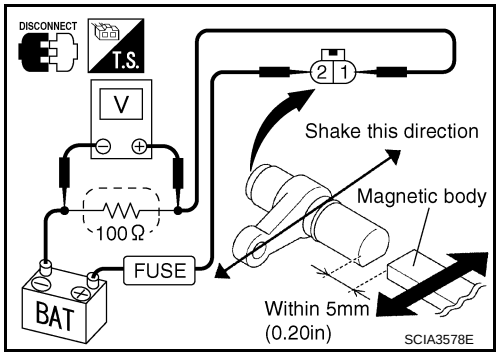

Signal	Voltage (Approx.)
HIGH	1.2 - 1.6V
LOW	0.4 - 0.8V

4. If NG, replace turbine revolution sensor.

DTC P0722 VEHICLE SPEED SENSOR A/T (REVOLUTION SENSOR) CIRCUIT

Description

INFOID:0000000001717922

- The revolution sensor detects the revolution of the idler gear parking pawl lock gear and emits a pulse signal. The pulse signal is sent to the TCM which converts it into vehicle speed.
- Hall IC is installed in revolution sensor, it itself handles in pulse of rectangular wave signal and transmits it to TCM due to hall effect. TCM recognizes the pulse with vehicle speed. Size of output doesn't depend on a rotation number and is fixed.

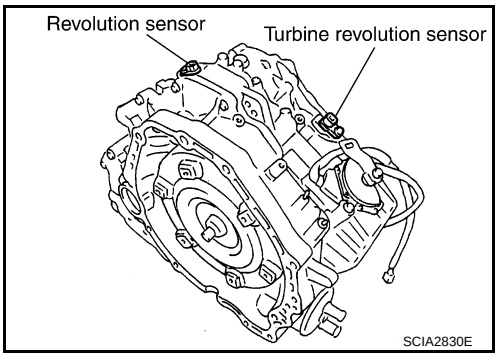

On Board Diagnosis Logic

INFOID:0000000001717923

- This is an OBD-II self-diagnostic item.
- Diagnostic trouble code “VHCL SPEED SEN-A/T” with CONSULT-III or P0722 without CONSULT-III is detected under the following conditions.
- When signal from revolution sensor does not input due to open, short, and so on.
- When unexpected signal input during running.

Possible Cause

INFOID:0000000001717924

- Harness or connectors
  (The sensor circuit is open or shorted.)
- Revolution sensor

DTC Confirmation Procedure

INFOID:0000000001717925

CAUTION:
- **Always drive vehicle at a safe speed.**
- **Be careful not to rev engine into the red zone on the tachometer.**

NOTE:
If “DTC Confirmation Procedure” has been previously performed, always turn ignition switch “OFF” and wait at least 10 seconds before performing the next test.
After the repair, perform the following procedure to confirm the malfunction is eliminated.

WITH CONSULT-III

1. Turn ignition switch “ON”. (Do not start engine.)
2. Select “DATA MONITOR” mode for “TRANSMISSION” with CONSULT-III.
3. Start engine.
4. Drive vehicle and check for an increase of “VHCL/S SE-A/T” value in response to “VHCL/S SE-MTR” value.
   If the check result is NG, go to AT-104, "Diagnosis Procedure".
   If the check result is OK, go to following step.
5. Maintain the following conditions for at least 2 consecutive minutes.
   FLUID TEMP: More than 20°C (68°F)
   VHCL/S SE-A/T: 70 km/h (43 MPH) or more
   SLCT LVR POSI: “D” position
   If the check result is NG, go to AT-104, "Diagnosis Procedure".

WITH GST

Follow the procedure “With CONSULT-III”.

Wiring Diagram - AT - VSSATC

INFOID:0000000001717926

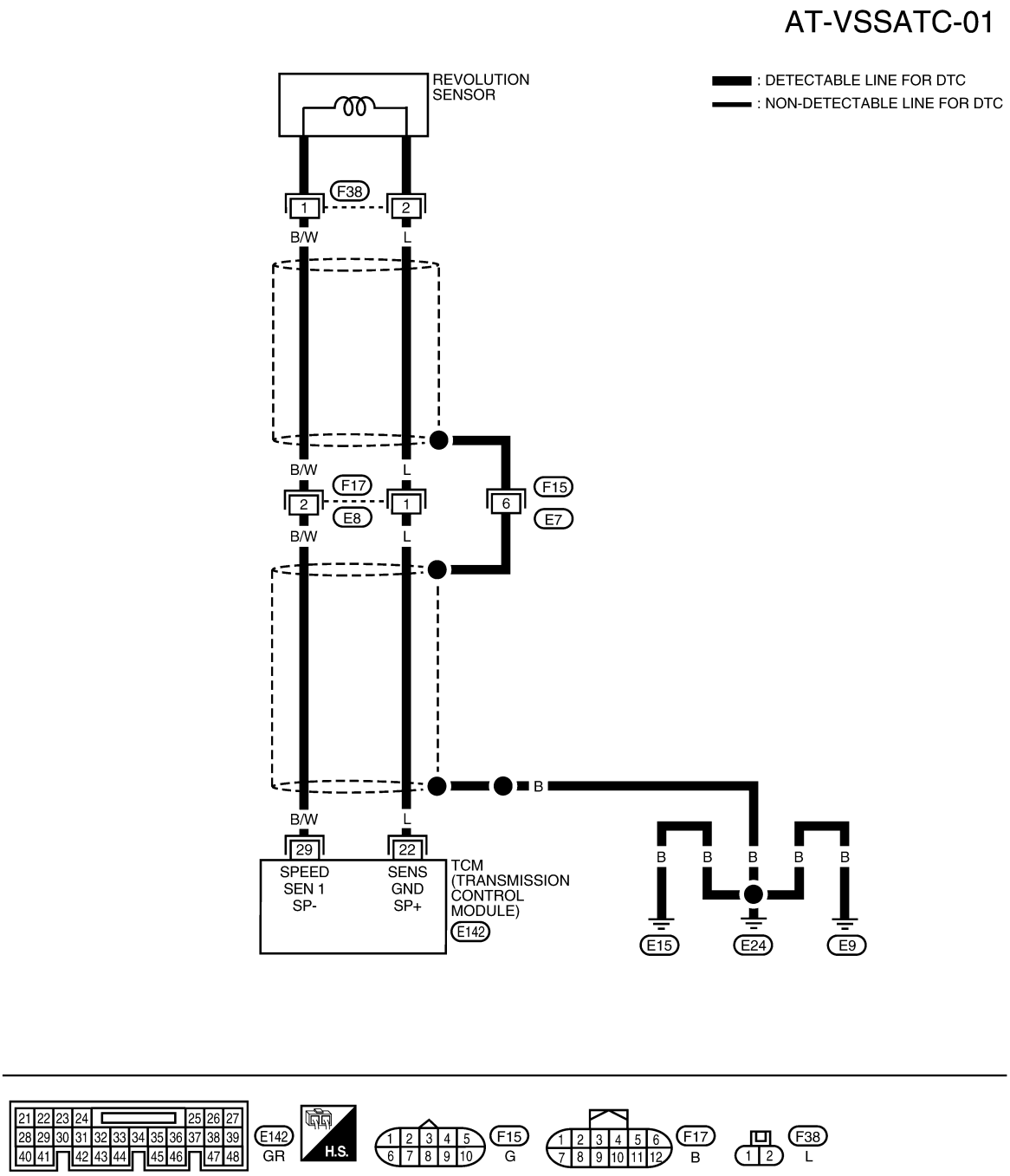

TCM Input/Output Signal Reference Values. Refer to AT-66, "TCM Input/Output Signal Reference Value".

Diagnosis Procedure

INFOID:0000000001717927

1. CHECK REVOLUTION SENSOR CIRCUIT

With CONSULT-III

1. Start engine.
2. Select “DATA MONITOR” mode for “TRANSMISSION” with CONSULT-III.
3. Drive vehicle and read out the value of “VHCL/S SE-AT”.

Monitor item	Condition	Specification
VHCL/S SE-AT	During driving	Approximately matches the speedometer reading.

Without CONSULT-III

1. Start the engine.
2. Check pulse between TCM connector terminals 22 and 29.

Connector	Terminal	Condition	Data (Approx.)
E142	22 - 29 (ground)	When moving at 20 km/h (12 MPH) in 1st gear.	119 Hz

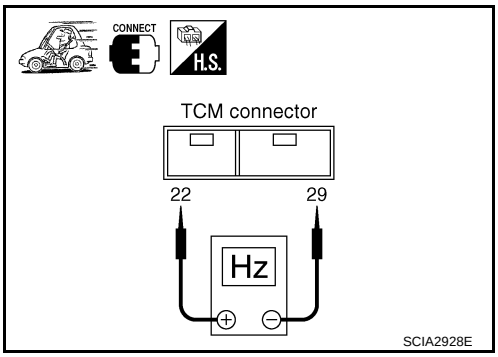

OK or NG

OK >> GO TO 3.
NG >> GO TO 2.

2. DETECT MALFUNCTIONING ITEM

Check the following.

- Open or short-circuit in the harness between TCM and revolution sensor.
- Revolution sensor. Refer to AT-104, "Component Inspection".

OK or NG

OK >> GO TO 3.
NG >> Repair or replace damaged parts.

3. CHECK DTC

Perform “DTC Confirmation Procedure”. Refer to AT-102, "DTC Confirmation Procedure".

OK or NG

OK >> **INSPECTION END**
NG >> GO TO 4.

4. CHECK TCM

1. Check TCM input/output signal. Refer to AT-66, "TCM Input/Output Signal Reference Value".
2. If NG, recheck TCM pin terminals for damage or loose connection with harness connector.

OK or NG

OK >> **INSPECTION END**
NG >> Repair or replace damaged parts.

Component Inspection

INFOID:0000000001717928

REVOLUTION SENSOR

1. Remove revolution sensor.

2. Connect 12V power supply and 100 Ω resistance to the terminal. (Do not mistake polarity)
3. Inspect the voltage of HIGH and LOW signal by shaking magnetic body from side to side at revolution sensor tip [gap is within 5mm (0.20 in)].

CAUTION:
Make sure to shake direction from bolt hole to sensor-self when shaking magnetic body. If not, voltage value cannot change.

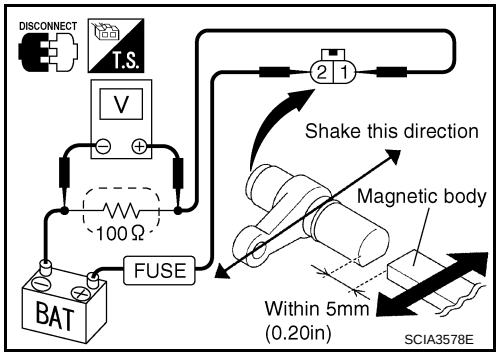

Signal	Voltage (Approx.)
HIGH	1.2 - 1.6V
LOW	0.4 - 0.8V

4. If NG, replace revolution sensor.

DTC P0726 ENGINE SPEED INPUT CIRCUIT PERFORMANCE

Description

INFOID:0000000001717929

The engine speed signal is sent from the ECM to the TCM.

On Board Diagnosis Logic

INFOID:0000000001717930

- This is not an OBD-II self-diagnostic item.
- Diagnostic trouble code “ENG SPD INP PERFOR” with CONSULT-III or 14th judgement flicker without CONSULT-III is detected when malfunction is detected in engine speed signal, actual engine torque signal or torque reduction signal that is output from ECM through CAN communication.

Possible Cause

INFOID:0000000001717931

- Harness or connectors
  (The signal circuit is open or shorted.)
- ECM

DTC Confirmation Procedure

INFOID:0000000001717932

CAUTION:
Always drive vehicle at a safe speed.
NOTE:
If “DTC Confirmation Procedure” has been previously performed, always turn ignition switch “OFF” and wait at least 10 seconds before performing the next test.
After the repair, perform the following procedure to confirm the malfunction is eliminated.

WITH CONSULT-III

1. Turn ignition switch “ON”. (Do not start engine.)
2. Select “DATA MONITOR” mode for “TRANSMISSION” with CONSULT-III.
3. Start engine.
4. Drive vehicle and maintain the following conditions for at least 10 consecutive seconds.
   VHCL/S SE-A/T: 10 km/h (6 MPH) or more
   ACCELE ANGLE: More than 10 %
   SLCT LVR POSI: “D” position
5. If DTC is detected, go to AT-106, "Diagnosis Procedure".

Diagnosis Procedure

INFOID:0000000001717933

1. CHECK DTC WITH ECM

With CONSULT-III

1. Turn ignition switch “ON”. (Do not start engine.)
2. Select “SELF-DIAG RESULTS” mode for “ENGINE” with CONSULT-III. Refer to EC-107, "CONSULT-III Function (ENGINE)".

OK or NG

OK >> GO TO 2.
NG >> Check the DTC detected item, go to EC-9.
- If CAN communication line is detected, go to AT-77.

2. CHECK DTC WITH TCM

With CONSULT-III

1. Start engine.
2. Select “DATA MONITOR” mode for “TRANSMISSION” with CONSULT-III.
3. While monitoring “ENGINE SPEED”, check for engine speed change corresponding to “ACCELE ANGLE”.

OK or NG

OK >> GO TO 3.
NG >> Check the ignition signal circuit.
- Refer to EC-591.

3. CHECK DTC

Perform “DTC Confirmation Procedure”. Refer to AT-106, "DTC Confirmation Procedure".

OK or NG

OK >> **INSPECTION END**
NG >> GO TO 4.

4. CHECK TCM

1. Check TCM input/output signal. Refer to AT-66, "TCM Input/Output Signal Reference Value".
2. If NG, recheck TCM pin terminals for damage or loose connection with harness connector.

OK or NG

OK >> **INSPECTION END**
NG >> Repair or replace damaged parts.

DTC P0731 A/T 1ST GEAR FUNCTION

Description

INFOID:0000000001717934

- This malfunction will not be detected while the O/D OFF indicator lamp is indicating another self-diagnosis malfunction.
- This malfunction is detected when the A/T does not shift into first gear position as instructed by the TCM. This is not caused by electrical malfunction (circuits open or shorted) but by mechanical malfunction such as control valve sticking, improper solenoid valve operation, etc.

Gear position		Shift solenoid valve				
		A	B	C	D	E
1st	D	ON (Closed)	ON (Open)	ON (Open)	OFF (Open)	OFF (Closed)
	L	ON (Closed)	ON (Open)	ON (Open)	OFF (Open)	OFF (Closed)

On Board Diagnosis Logic

INFOID:0000000001717935

- This is an OBD-II self-diagnostic item.
- Diagnostic trouble code “A/T 1ST GR FNCTN” with CONSULT-III or P0731 without CONSULT-III is detected when A/T cannot be shifted to the 1st gear position even if electrical circuit is good.

Possible Cause

INFOID:0000000001717936

- Shift solenoid valve A
  (Off stick.)
- 2nd brake
- 2nd coast brake
- One-way clutch No.1
- One-way clutch No.2
- Hydraulic control circuit

DTC Confirmation Procedure

INFOID:0000000001717937

CAUTION:
- **Always drive vehicle at a safe speed.**
- **Be careful not to rev engine into the red zone on the tachometer.**

NOTE:
If “DTC Confirmation Procedure” has been previously performed, always turn ignition switch “OFF” and wait at least 10 seconds before performing the next test.
After the repair, perform the following procedure to confirm the malfunction is eliminated.

WITH CONSULT-III

1. Start engine and select “DATA MONITOR” mode for “TRANSMISSION” with CONSULT-III.
2. Make sure that ATF temperature is within the range below.
   FLUID TEMP: More than 20°C (68°F)
   If out of range, drive the vehicle to warm up the fluid.
3. Accelerate vehicle to maintain the following conditions for at least 12 consecutive seconds.
   SLCT LVR POSI: “D” position
   GEAR: 1st position
   [Vehicle speed and accelerator angle: 1st gear position retainable condition. (Refer to AT-292, "Shift Schedule".)]
   Driving location: Driving the vehicle uphill (increased engine load) will help maintain the driving conditions required for this test.
4. If DTC is detected, go to AT-110, "Diagnosis Procedure".

WITH GST

Follow the procedure “With CONSULT-III”.

Wiring Diagram - AT - 1STSIG

INFOID:0000000001717938

AT-1STSIG-01

: DETECTABLE LINE FOR DTC
: NON-DETECTABLE LINE FOR DTC

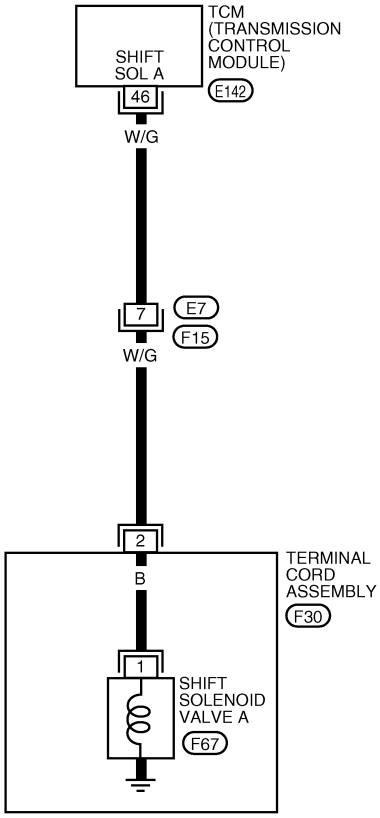

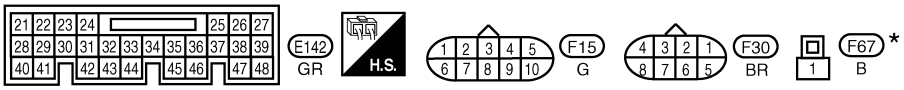

*: THIS CONNECTOR IS NOT SHOWN IN "HARNESS LAYOUT" OF PG SECTION.

BCWA0344E

TCM Input/Output Signal Reference Values. Refer to AT-66, "TCM Input/Output Signal Reference Value" .

Diagnosis Procedure

INFOID:0000000001717939

1. CHECK SHIFT SOLENOID VALVE A CIRCUIT

Perform “Diagnostic Procedure” for DTC P0750. Refer to AT-137, "Diagnosis Procedure".

OK or NG

OK >> GO TO 2.
NG >> Repair or replace damaged parts.

2. CHECK MALFUNCTIONING ITEM

1. Control valve assembly. Refer to AT-222, "Control Valve Assembly".
2. Disassemble A/T. Refer to AT-232.
3. Check the following item:

- 2nd brake. Refer to AT-251, "Oil Pump, 2nd Coast Brake & 2nd Brake".
- 2nd coast brake. Refer to AT-251, "Oil Pump, 2nd Coast Brake & 2nd Brake", AT-257, "One-Way Clutch Outer Race Sub Assembly & 2nd Coast Brake Hub & One-Way Clutch No.1".
- One-way clutch No.1. Refer to AT-257, "One-Way Clutch Outer Race Sub Assembly & 2nd Coast Brake Hub & One-Way Clutch No.1".
- One-way clutch No.2. Refer to AT-232.

OK or NG

OK >> GO TO 3.
NG >> Repair or replace damaged parts.

3. CHECK DTC

Perform “DTC Confirmation Procedure”. Refer to AT-108, "DTC Confirmation Procedure".

OK or NG

OK >> **INSPECTION END**
NG >> Replace control valve assembly. Refer to AT-222, "Control Valve Assembly".

DTC P0732 A/T 2ND GEAR FUNCTION

Description

INFOID:0000000001717940

- This malfunction will not be detected while the O/D OFF indicator lamp is indicating another self-diagnosis malfunction.
- This malfunction is detected when the A/T does not shift into second gear position as instructed by the TCM. This is not caused by electrical malfunction (circuits open or shorted) but by mechanical malfunction such as control valve sticking, improper solenoid valve operation, etc.

Gear position		Shift solenoid valve				
		A	B	C	D	E
2nd	D	OFF (Open)	OFF (Closed)	ON (Open)	OFF (Open)	OFF (Closed)
	L	OFF (Open)	OFF (Closed)	ON (Open)	OFF (Open)	OFF (Closed)

On Board Diagnosis Logic

INFOID:0000000001717941

- This is an OBD-II self-diagnostic item.
- Diagnostic trouble code “A/T 2ND GR FNCTN” with CONSULT-III or P0732 without CONSULT-III is detected when A/T cannot be shifted to the 2nd gear position even if electrical circuit is good.

Possible Cause

INFOID:0000000001717942

- Shift solenoid valve A
  (On stick.)
- Shift solenoid valve B
  (On stick.)
- Shift solenoid valve C
  (Off stick.)
- Shift solenoid valve D
  (On stick.)
- Pressure control solenoid valve A
  (On stick.)
- Pressure control solenoid valve C
  (On stick.)
- U/D brake
- 2nd coast brake
- 2nd brake
- One-way clutch No.1
- One-way clutch No.2
- B5 brake
- Hydraulic control circuit

DTC Confirmation Procedure

INFOID:0000000001717943

CAUTION:
- **Always drive vehicle at a safe speed.**
- **Be careful not to rev engine into the red zone on the tachometer.**

NOTE:
If “DTC Confirmation Procedure” has been previously performed, always turn ignition switch “OFF” and wait at least 10 seconds before performing the next test.
After the repair, perform the following procedure to confirm the malfunction is eliminated.

WITH CONSULT-III

1. Start engine and select “DATA MONITOR” mode for “TRANSMISSION” with CONSULT-III.
2. Make sure that ATF temperature is within the range below.
   FLUID TEMP: More than 20°C (68°F)
   If out of range, drive the vehicle to warm up the fluid.
3. Accelerate vehicle to maintain the following conditions for at least 12 consecutive seconds.
   SLCT LVR POSI: “D” position
   GEAR: 2nd position

[Vehicle speed and accelerator angle: 2nd gear position retainable condition. (Refer to AT-292, "Shift Schedule".)]
Driving location: Driving the vehicle uphill (increased engine load) will help maintain the driving conditions required for this test.

4. If DTC is detected, go to AT-115, "Diagnosis Procedure".

WITH GST

Follow the procedure “With CONSULT-III”.

Wiring Diagram - AT - 2NDSIG

INFOID:0000000001717944

AT-2NDSIG-01

: DETECTABLE LINE FOR DTC
: NON-DETECTABLE LINE FOR DTC

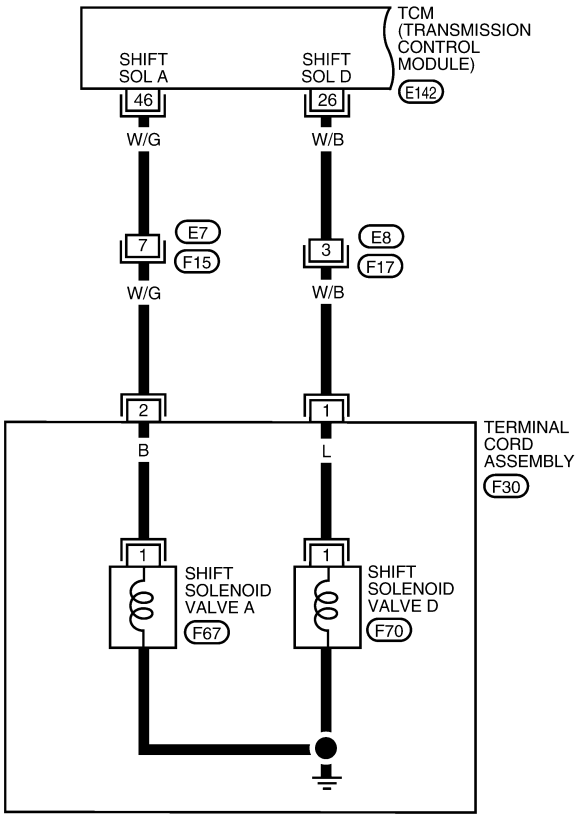

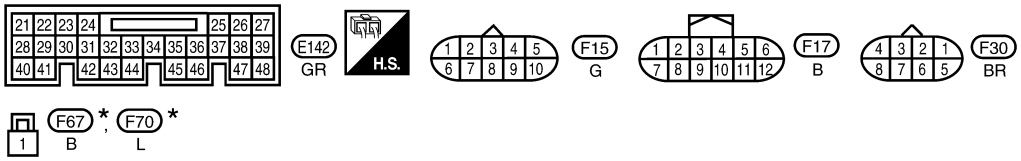

★: THIS CONNECTOR IS NOT SHOWN IN “HARNESS LAYOUT” OF PG SECTION.

BCWA0597E

AT-2NDSIG-02

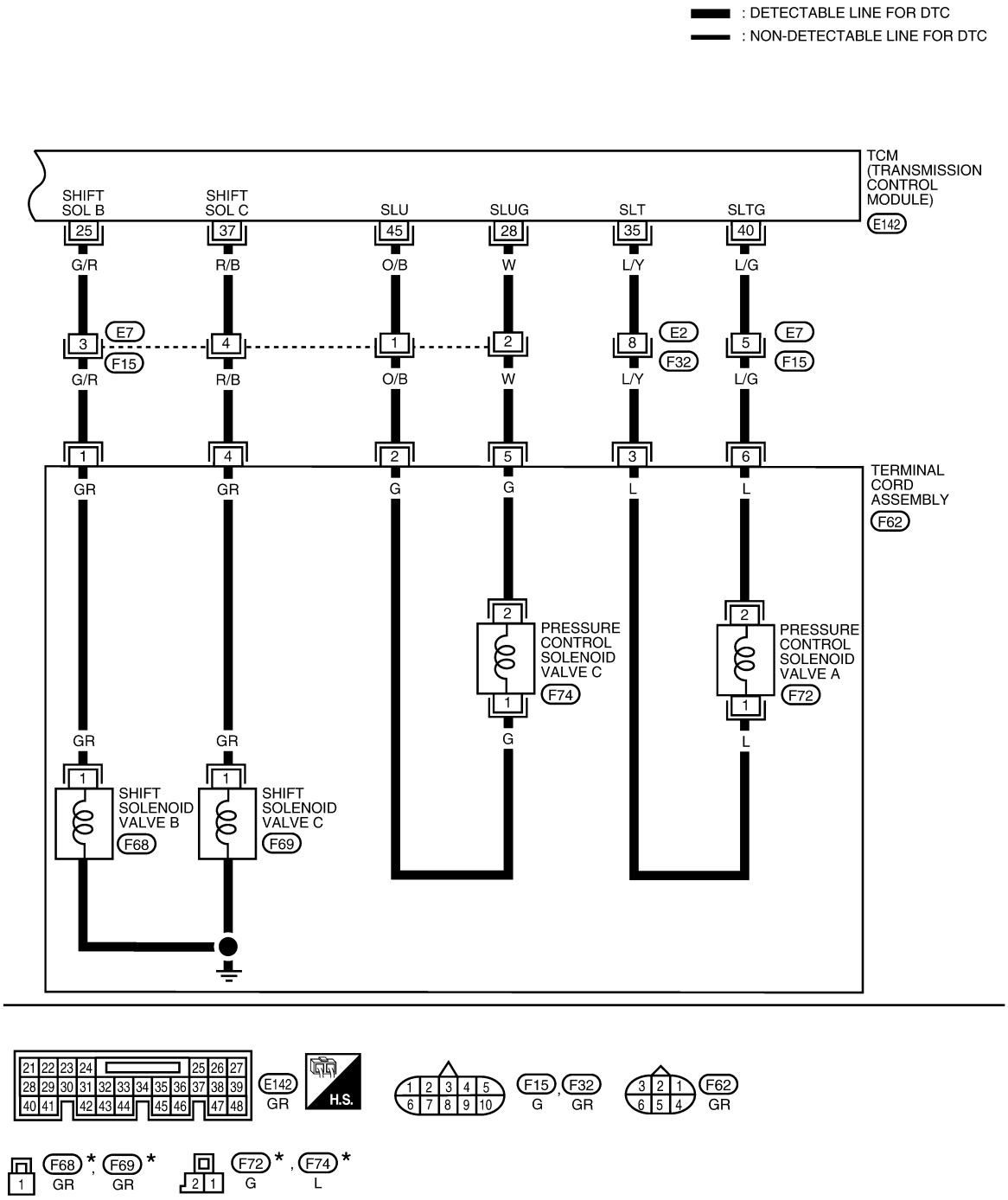

*: THIS CONNECTOR IS NOT SHOWN IN “HARNESS LAYOUT” OF PG SECTION.

BCWA0598E

TCM Input/Output Signal Reference Values. Refer to AT-66, "TCM Input/Output Signal Reference Value" .

Diagnosis Procedure

INFOID:0000000001717945

1. CHECK EACH SHIFT SOLENOID VALVE CIRCUIT

Perform “Diagnostic Procedure” for the following DTCs.
- “DTC P0750 SHIFT SOLENOID VALVE A” (Refer to AT-137, "Diagnosis Procedure".)
- “DTC P0755 SHIFT SOLENOID VALVE B” (Refer to AT-142, "Diagnosis Procedure".)
- “DTC P0760 SHIFT SOLENOID VALVE C” (Refer to AT-147, "Diagnosis Procedure".)
- “DTC P0765 SHIFT SOLENOID VALVE D” (Refer to AT-157, "Diagnosis Procedure".)

OK or NG

OK >> GO TO 2.
NG >> Repair or replace damaged parts.

2. CHECK EACH PRESSURE CONTROL SOLENOID VALVE CIRCUIT

Perform “Diagnostic Procedure” for the following DTCs.
- “DTC P0745 PRESSURE CONTROL SOLENOID VALVE A” (Refer to AT-132, "Diagnosis Procedure".)
- “DTC P0795 PRESSURE CONTROL SOLENOID VALVE C” (Refer to AT-176, "Diagnosis Procedure".)

OK or NG

OK >> GO TO 3.
NG >> Repair or replace damaged parts.

3. CHECK MALFUNCTIONING ITEM

1. Control valve assembly. Refer to AT-222, "Control Valve Assembly".
2. Disassemble A/T. Refer to AT-232.
3. Check the following item:

- U/D brake. Refer to AT-232.
- 2nd coast brake. Refer to AT-251, "Oil Pump, 2nd Coast Brake & 2nd Brake", AT-257, "One-Way Clutch Outer Race Sub Assembly & 2nd Coast Brake Hub & One-Way Clutch No.1".
- 2nd brake. Refer to AT-251, "Oil Pump, 2nd Coast Brake & 2nd Brake".
- One-way clutch No.1. Refer to AT-257, "One-Way Clutch Outer Race Sub Assembly & 2nd Coast Brake Hub & One-Way Clutch No.1".
- One-way clutch No.2. Refer to AT-232.
- B5 brake. Refer to AT-259, "Transaxle Case Cover & B5 Brake".

OK or NG

OK >> GO TO 4.
NG >> Repair or replace damaged parts.

4. CHECK DTC

Perform “DTC Confirmation Procedure”. Refer to AT-111, "DTC Confirmation Procedure".

OK or NG

OK >> **INSPECTION END**
NG >> Replace control valve assembly. Refer to AT-222, "Control Valve Assembly".

DTC P0733 A/T 3RD GEAR FUNCTION

Description

INFOID:0000000001717946

- This malfunction will not be detected while the O/D OFF indicator lamp is indicating another self-diagnosis malfunction.
- This malfunction is detected when the A/T does not shift into third gear position as instructed by the TCM. This is not caused by electrical malfunction (circuits open or shorted) but by mechanical malfunction such as control valve sticking, improper solenoid valve operation, etc.

Gear position		Shift solenoid valve				
		A	B	C	D	E
3rd	D	OFF (Open)	OFF (Closed)	ON (Open)	ON (Closed)	OFF (Closed)
	L	OFF (Open)	OFF (Closed)	ON (Open)	ON (Closed)	OFF (Closed)

On Board Diagnosis Logic

INFOID:0000000001717947

- This is an OBD-II self-diagnostic item.
- Diagnostic trouble code “A/T 3RD GR FNCTN” with CONSULT-III or P0733 without CONSULT-III is detected when A/T cannot be shifted to the 3rd gear position even if electrical circuit is good.

Possible Cause

INFOID:0000000001717948

- Shift solenoid valve A
  (On stick.)
- Shift solenoid valve B
  (On stick.)
- Shift solenoid valve C
  (Off stick.)
- Shift solenoid valve D
  (Off stick.)
- Pressure control solenoid valve A
  (On stick.)
- B5 brake
- U/D clutch
- U/D brake
- Hydraulic control circuit

DTC Confirmation Procedure

INFOID:0000000001717949

CAUTION:
- **Always drive vehicle at a safe speed.**
- **Be careful not to rev engine into the red zone on the tachometer.**

NOTE:
If “DTC Confirmation Procedure” has been previously performed, always turn ignition switch “OFF” and wait at least 10 seconds before performing the next test.
After the repair, perform the following procedure to confirm the malfunction is eliminated.

WITH CONSULT-III

1. Start engine and select “DATA MONITOR” mode for “TRANSMISSION” with CONSULT-III.
2. Make sure that ATF temperature is within the range below.
   FLUID TEMP: More than 20°C (68°F)
   If out of range, drive the vehicle to warm up the fluid.
3. Accelerate vehicle to maintain the following conditions for at least 12 consecutive seconds.
   SLCT LVR POSI: “D” position
   GEAR: 3rd position
   [Vehicle speed and accelerator angle: 3rd gear position retainable condition. (Refer to AT-292, "Shift Schedule".)]
   Driving location: Driving the vehicle uphill (increased engine load) will help maintain the driving conditions required for this test.
4. If DTC is detected, go to AT-119, "Diagnosis Procedure".

WITH GST

Follow the procedure “With CONSULT-III”.

Wiring Diagram - AT - 3RDSIG

INFOID:0000000001717950

AT-3RDSIG-01

: DETECTABLE LINE FOR DTC
: NON-DETECTABLE LINE FOR DTC

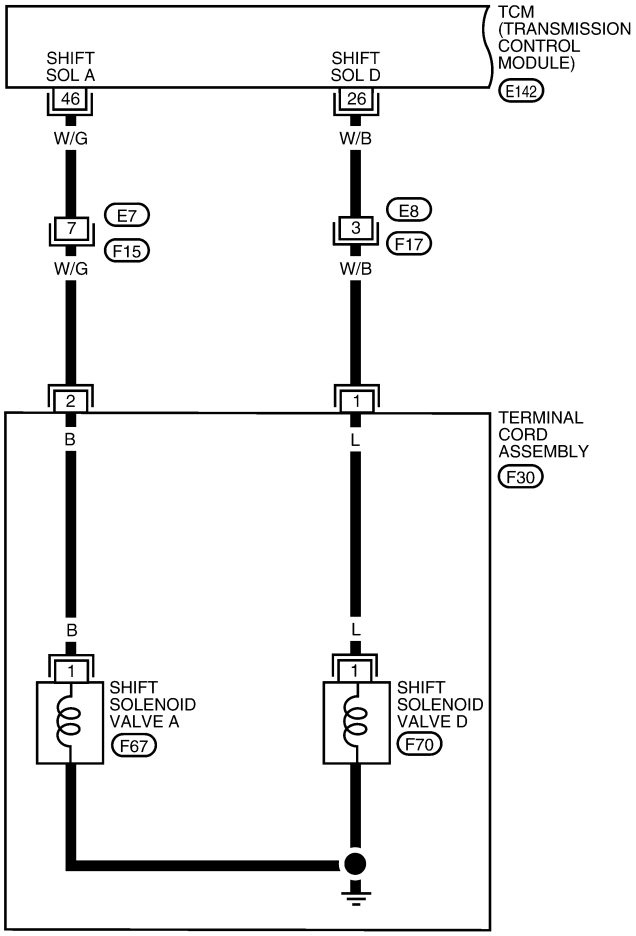

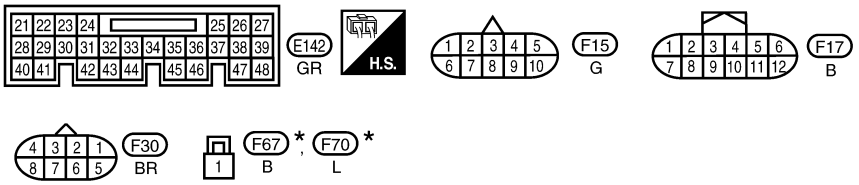

*: THIS CONNECTOR IS NOT SHOWN IN “HARNESS LAYOUT” OF PG SECTION.

BCWA0599E

AT-3RDSIG-02

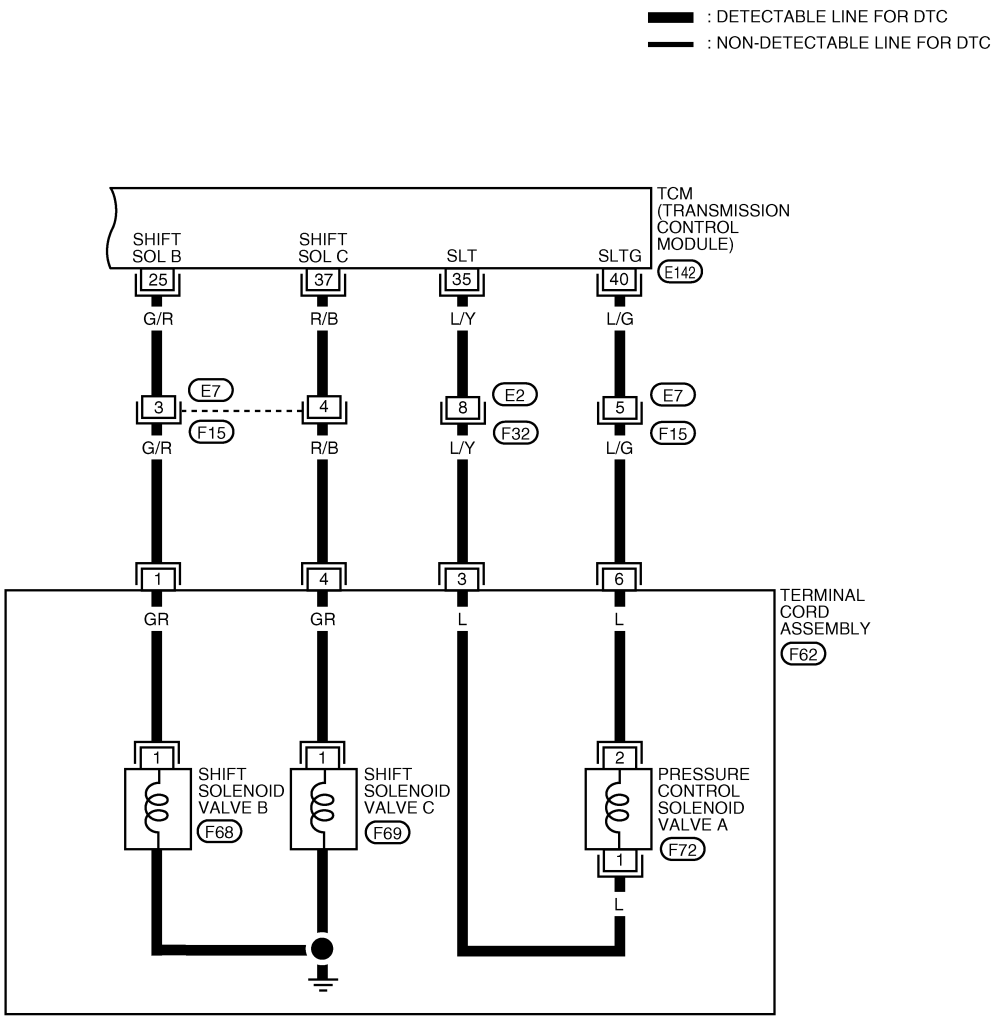

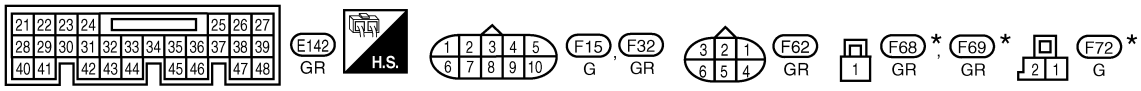

★: THIS CONNECTOR IS NOT SHOWN IN “HARNESS LAYOUT” OF PG SECTION.

BCWA0313E

TCM Input/Output Signal Reference Values. Refer to AT-66, "TCM Input/Output Signal Reference Value".

Diagnosis Procedure

INFOID:0000000001717951

1. CHECK EACH SHIFT SOLENOID VALVE CIRCUIT

Perform “Diagnostic Procedure” for the following DTCs.
- “DTC P0750 SHIFT SOLENOID VALVE A” (Refer to AT-137, "Diagnosis Procedure".)
- “DTC P0755 SHIFT SOLENOID VALVE B” (Refer to AT-142, "Diagnosis Procedure".)
- “DTC P0760 SHIFT SOLENOID VALVE C” (Refer to AT-147, "Diagnosis Procedure".)
- “DTC P0765 SHIFT SOLENOID VALVE D” (Refer to AT-157, "Diagnosis Procedure".)

OK or NG

OK >> GO TO 2.
NG >> Repair or replace damaged parts.

2. CHECK PRESSURE CONTROL SOLENOID VALVE A CIRCUIT

Perform “Diagnostic Procedure” for DTC P0745. Refer to AT-132, "Diagnosis Procedure".

OK or NG

OK >> GO TO 3.
NG >> Repair or replace damaged parts.

3. CHECK MALFUNCTIONING ITEM

1. Control valve assembly. Refer to AT-222, "Control Valve Assembly".
2. Disassemble A/T. Refer to AT-232.
3. Check the following item:
- B5 brake. Refer to AT-259, "Transaxle Case Cover & B5 Brake".
- U/D clutch. Refer to AT-232.
- U/D brake. Refer to AT-232.

OK or NG

OK >> GO TO 4.
NG >> Repair or replace damaged parts.

4. CHECK DTC

Perform “DTC Confirmation Procedure”. Refer to AT-116, "DTC Confirmation Procedure".

OK or NG

OK >> **INSPECTION END**
NG >> Replace the control valve assembly. Refer to AT-222, "Control Valve Assembly".

DTC P0734 A/T 4TH GEAR FUNCTION

Description

INFOID:0000000001717952

- This malfunction will not be detected while the O/D OFF indicator lamp is indicating another self-diagnosis malfunction.
- This malfunction is detected when the A/T does not shift into fourth gear position as instructed by the TCM. This is not caused by electrical malfunction (circuits open or shorted) but by mechanical malfunction such as control valve sticking, improper solenoid valve operation, etc.

Gear position		Shift solenoid valve				
		A	B	C	D	E
4th	D	OFF (Open)	OFF (Closed)	OFF (Closed)	ON (Closed)	OFF (Closed)

On Board Diagnosis Logic

INFOID:0000000001717953

- This is an OBD-II self-diagnostic item.
- Diagnostic trouble code “A/T 4TH GR FNCTN” with CONSULT-III or P0734 without CONSULT-III is detected when A/T cannot be shifted to the 4th gear position even if electrical circuit is good.

Possible Cause

INFOID:0000000001717954

- Shift solenoid valve A
  (On stick.)
- Shift solenoid valve B
  (On stick.)
- Shift solenoid valve C
  (On stick.)
- Pressure control solenoid valve A
  (On stick.)
- Forward and direct clutch assembly
- U/D clutch
- U/D brake
- 2nd coast brake
- One-way clutch No.1
- Hydraulic control circuit

DTC Confirmation Procedure

INFOID:0000000001717955

CAUTION:
- **Always drive vehicle at a safe speed.**
- **Be careful not to rev engine into the red zone on the tachometer.**

NOTE:
If “DTC Confirmation Procedure” has been previously performed, always turn ignition switch “OFF” and wait at least 10 seconds before performing the next test.
After the repair, perform the following procedure to confirm the malfunction is eliminated.

WITH CONSULT-III

1. Start engine and select “DATA MONITOR” mode for “TRANSMISSION” with CONSULT-III.
2. Make sure that ATF temperature is within the range below.
   FLUID TEMP: More than 20°C (68°F)
   If out of range, drive the vehicle to warm up the fluid.
3. Accelerate vehicle to maintain the following conditions for at least 12 consecutive seconds.
   SLCT LVR POSI: “D” position
   GEAR: 4th position
   [Vehicle speed and accelerator angle: 4th gear position retainable condition. (Refer to AT-292, "Shift Schedule".)]
   Driving location: Driving the vehicle uphill (increased engine load) will help maintain the driving conditions required for this test.
4. If DTC is detected, go to AT-122, "Diagnosis Procedure".

WITH GST

Follow the procedure “With CONSULT-III”.

Wiring Diagram - AT - 4THSIG

INFOID:0000000001717956

AT-4THSIG-01

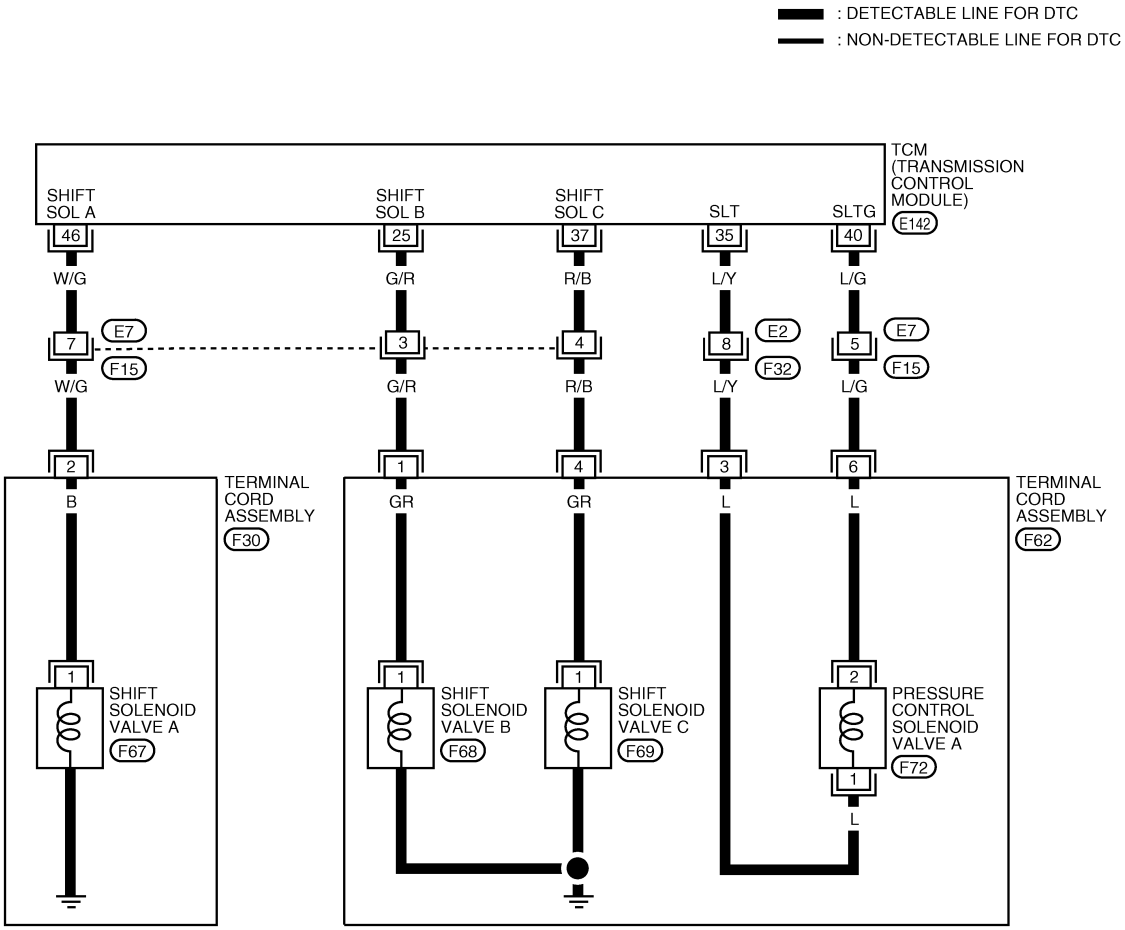

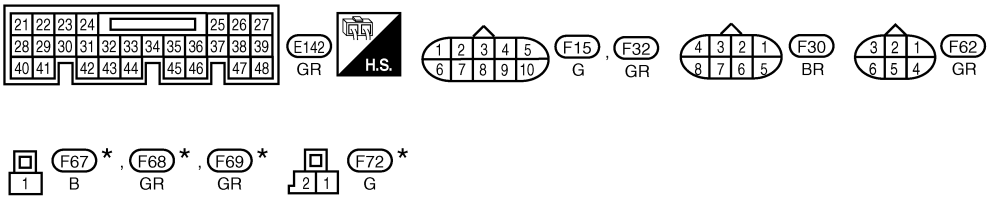

*: THIS CONNECTOR IS NOT SHOWN IN “HARNESS LAYOUT” OF PG SECTION.

BCWA0345E

TCM Input/Output Signal Reference Values. Refer to AT-66, "TCM Input/Output Signal Reference Value".

Diagnosis Procedure

INFOID:0000000001717957

1. CHECK EACH SHIFT SOLENOID VALVE CIRCUIT

Perform “Diagnostic Procedure” for the following DTCs.
- “DTC P0750 SHIFT SOLENOID VALVE A” (Refer to AT-137, "Diagnosis Procedure".)
- “DTC P0755 SHIFT SOLENOID VALVE B” (Refer to AT-142, "Diagnosis Procedure".)
- “DTC P0760 SHIFT SOLENOID VALVE C” (Refer to AT-147, "Diagnosis Procedure".)

OK or NG

OK >> GO TO 2.
NG >> Repair or replace damaged parts.

2. CHECK PRESSURE CONTROL SOLENOID VALVE A CIRCUIT

Perform “Diagnostic Procedure” for DTC P0745. Refer to AT-132, "Diagnosis Procedure".

OK or NG

OK >> GO TO 3.
NG >> Repair or replace damaged parts.

3. CHECK MALFUNCTIONING ITEM

1. Control valve assembly. Refer to AT-222, "Control Valve Assembly".
2. Disassemble A/T. Refer to AT-232.
3. Check the following item:
- Forward and direct clutch assembly. Refer to AT-232.
- 2nd coast brake. Refer to AT-251, "Oil Pump, 2nd Coast Brake & 2nd Brake", AT-257, "One-Way Clutch Outer Race Sub Assembly & 2nd Coast Brake Hub & One-Way Clutch No.1".
- U/D brake. Refer to AT-232.
- U/D clutch. Refer to AT-232.
- One-way clutch No.1. Refer to AT-257, "One-Way Clutch Outer Race Sub Assembly & 2nd Coast Brake Hub & One-Way Clutch No.1".

OK or NG

OK >> GO TO 4.
NG >> Repair or replace damaged parts.

4. CHECK DTC

Perform “DTC Confirmation Procedure”. Refer to AT-120, "DTC Confirmation Procedure".

OK or NG

OK >> **INSPECTION END**
NG >> Replace the control valve assembly. Refer to AT-222, "Control Valve Assembly".

DTC P0735 A/T 5TH GEAR FUNCTION

Description

INFOID:0000000001717958

- This malfunction will not be detected while the O/D OFF indicator lamp is indicating another self-diagnosis malfunction.
- This malfunction is detected when the A/T does not shift into fifth gear position as instructed by the TCM. This is not caused by electrical malfunction (circuits open or shorted) but by mechanical malfunction such as control valve sticking, improper solenoid valve operation, etc.

Gear position		Shift solenoid valve				
		A	B	C	D	E
5th	D	OFF (Open)	ON (Open)	OFF (Closed)	ON (Closed)	OFF (Closed)

On Board Diagnosis Logic

INFOID:0000000001717959

- This is an OBD-II self-diagnostic item.
- Diagnostic trouble code “A/T 5TH GR FNCTN” with CONSULT-III or P0735 without CONSULT-III is detected when A/T cannot be shifted to the 5th gear position even if electrical circuit is good.

Possible Cause

INFOID:0000000001717960

- Shift solenoid valve B
  (Off stick.)
- Shift solenoid valve C
  (On stick.)
- Shift solenoid valve E
  (On stick.)
- Pressure control solenoid valve A
  (On stick.)
- Pressure control solenoid valve B
  (On stick.)
- Forward and direct clutch assembly
- Direct clutch
- 2no coast brake
- One-way clutch No.1
- Hydraulic control circuit

DTC Confirmation Procedure

INFOID:0000000001717961

CAUTION:
- **Always drive vehicle at a safe speed.**
- **Be careful not to rev engine into the red zone on the tachometer.**

NOTE:
If “DTC Confirmation Procedure” has been previously performed, always turn ignition switch “OFF” and wait at least 10 seconds before performing the next test.
After the repair, perform the following procedure to confirm the malfunction is eliminated.

WITH CONSULT-III

1. Start engine and select “DATA MONITOR” mode for “TRANSMISSION” with CONSULT-III.
2. Make sure that ATF temperature is within the range below.
   FLUID TEMP: More than 20°C (68°F)
   If out of range, drive the vehicle to warm up the fluid.
3. Accelerate vehicle to maintain the following conditions for at least 12 consecutive seconds.
   SLCT LVR POSI: “D” position
   GEAR: 5th position
   [Vehicle speed and accelerator angle: 5th gear position retainable condition. (Refer to AT-292, "Shift Schedule".)]
   Driving location: Driving the vehicle uphill (increased engine load) will help maintain the driving conditions required for this test.
4. If DTC is detected, go to AT-126, "Diagnosis Procedure".

WITH GST

Follow the procedure “With CONSULT-III”.

Wiring Diagram - AT - 5THSIG

INFOID:0000000001717962

AT-5THSIG-01

: DETECTABLE LINE FOR DTC
: NON-DETECTABLE LINE FOR DTC

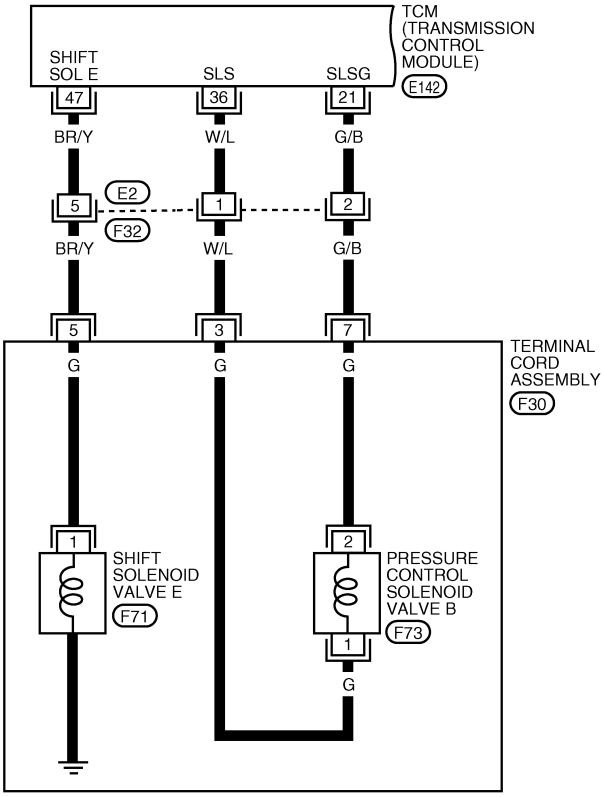

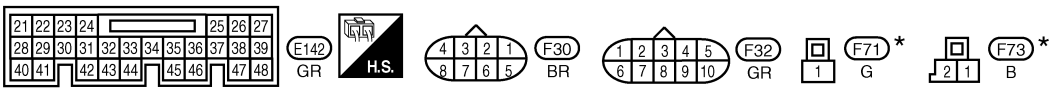

*: THIS CONNECTOR IS NOT SHOWN IN “HARNESS LAYOUT” OF PG SECTION.

BCWA0346E

AT-5THSIG-02

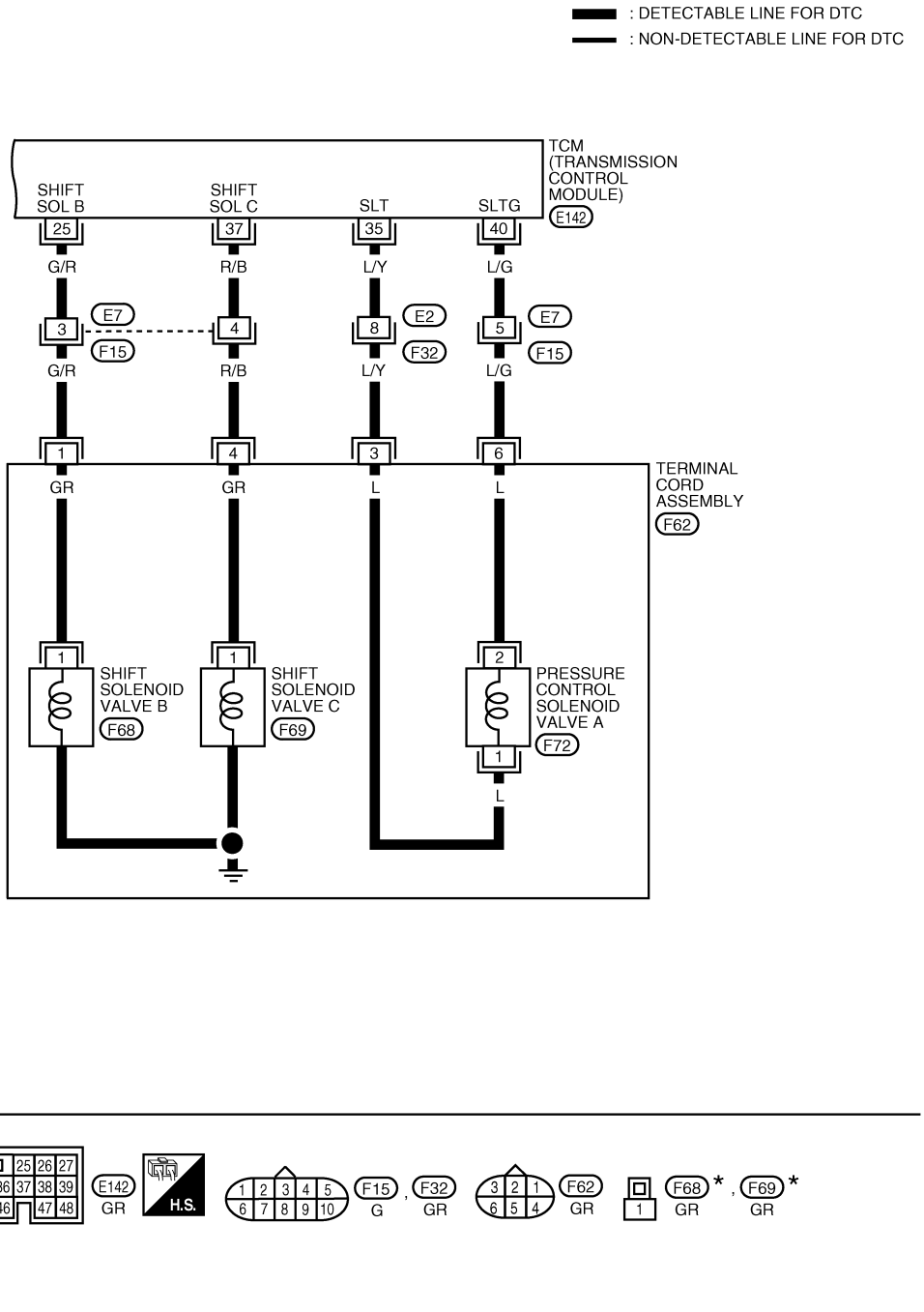

*: THIS CONNECTOR IS NOT SHOWN IN "HARNESS LAYOUT" OF PG SECTION.

TCM Input/Output Signal Reference Values. Refer to AT-66, "TCM Input/Output Signal Reference Value".

Diagnosis Procedure

INFOID:0000000001717963

1. CHECK EACH SHIFT SOLENOID VALVE CIRCUIT

Perform “Diagnostic Procedure” for the following DTCs.
- “DTC P0755 SHIFT SOLENOID VALVE B” (Refer to AT-142, "Diagnosis Procedure".)
- “DTC P0760 SHIFT SOLENOID VALVE C” (Refer to AT-147, "Diagnosis Procedure".)
- “DTC P0770 SHIFT SOLENOID VALVE E” (Refer to AT-162, "Diagnosis Procedure".)

OK or NG

OK >> GO TO 2.
NG >> Repair or replace damaged parts.

2. CHECK EACH PRESSURE CONTROL SOLENOID VALVE CIRCUIT

Perform “Diagnostic Procedure” for the following DTCs.
- “DTC P0745 PRESSURE CONTROL SOLENOID VALVE A” (Refer to AT-132, "Diagnosis Procedure".)
- “DTC P0775 PRESSURE CONTROL SOLENOID VALVE B” (Refer to AT-167, "Diagnosis Procedure".)

OK or NG

OK >> GO TO 3.
NG >> Repair or replace damaged parts.

3. CHECK MALFUNCTIONING ITEM

1. Control valve assembly. Refer to AT-222, "Control Valve Assembly".
2. Disassemble A/T. Refer to AT-232.
3. Check the following item:

- Forward and direct clutch assembly. Refer to AT-232.
- 2nd brake. Refer to AT-251, "Oil Pump, 2nd Coast Brake & 2nd Brake".
- One-way clutch No.1. Refer to AT-257, "One-Way Clutch Outer Race Sub Assembly & 2nd Coast Brake Hub & One-Way Clutch No.1".

OK or NG

OK >> GO TO 4.
NG >> Repair or replace damaged parts.

4. CHECK DTC

Perform “DTC Confirmation Procedure”. Refer to AT-123, "DTC Confirmation Procedure".

OK or NG

OK >> **INSPECTION END**
NG >> Replace the control valve assembly. Refer to AT-222, "Control Valve Assembly".

DTC P0744 A/T TCC S/V FUNCTION (LOCK-UP)

Description

INFOID:0000000001717964

- This malfunction will not be detected while the O/D OFF indicator lamp is indicating another self-diagnosis malfunction.
- This malfunction is detected when the torque converter clutch does not lock up as instructed by the TCM. This is not caused by electrical malfunction (circuits open or shorted) but by mechanical malfunction such as control valve sticking, improper solenoid valve operation, malfunctioning oil pump or torque converter clutch, etc.

On Board Diagnosis Logic

INFOID:0000000001717965

- This is an OBD-II self-diagnostic item.
- Diagnostic trouble code “A/T TCC S/V FNCTN” with CONSULT-III or P0744 without CONSULT-III is detected when A/T cannot perform lock-up even if electrical circuit is good.

Possible Cause

INFOID:0000000001717966

- Shift solenoid valve D
  (Off stick.)
- Pressure control solenoid valve C
  (Off stick.)
- Torque converter clutch
- Hydraulic control circuit

DTC Confirmation Procedure

INFOID:0000000001717967

CAUTION:
- **Always drive vehicle at a safe speed.**
- **Be careful not to rev engine into the red zone on the tachometer.**

NOTE:
If “DTC Confirmation Procedure” has been previously performed, always turn ignition switch “OFF” and wait at least 10 seconds before performing the next test.
After the repair, perform the following procedure to confirm the malfunction is eliminated.

WITH CONSULT-III

1. Start engine and select “DATA MONITOR” mode for “TRANSMISSION” with CONSULT-III.
2. Make sure that ATF temperature is within the range below.
   FLUID TEMP: More than 20°C (68°F)
   If out of range, drive the vehicle to warm up the fluid.
3. Accelerate vehicle to more than 100 km/h (62 MPH) and maintain the following conditions for at least 12 consecutive seconds.
   SLCT LVR POSI: “D” position
   GEAR: 5th position
   SLIP REV: Less than 100 rpm
   ACCELE ANGLE: More than 5 %
   LOCK-UP: ON (Refer to AT-292, "Shift Schedule".)
   [Vehicle speed: Constant speed of more than 100 km/h (62 MPH).]
   Driving location: Driving the vehicle uphill (increased engine load) will help maintain the driving conditions required for this test.
4. If DTC is detected, go to AT-129, "Diagnosis Procedure".

WITH GST

Follow the procedure “With CONSULT-III”.

Wiring Diagram - AT - TCCSIG

INFOID:0000000001717968

AT-TCCSIG-01

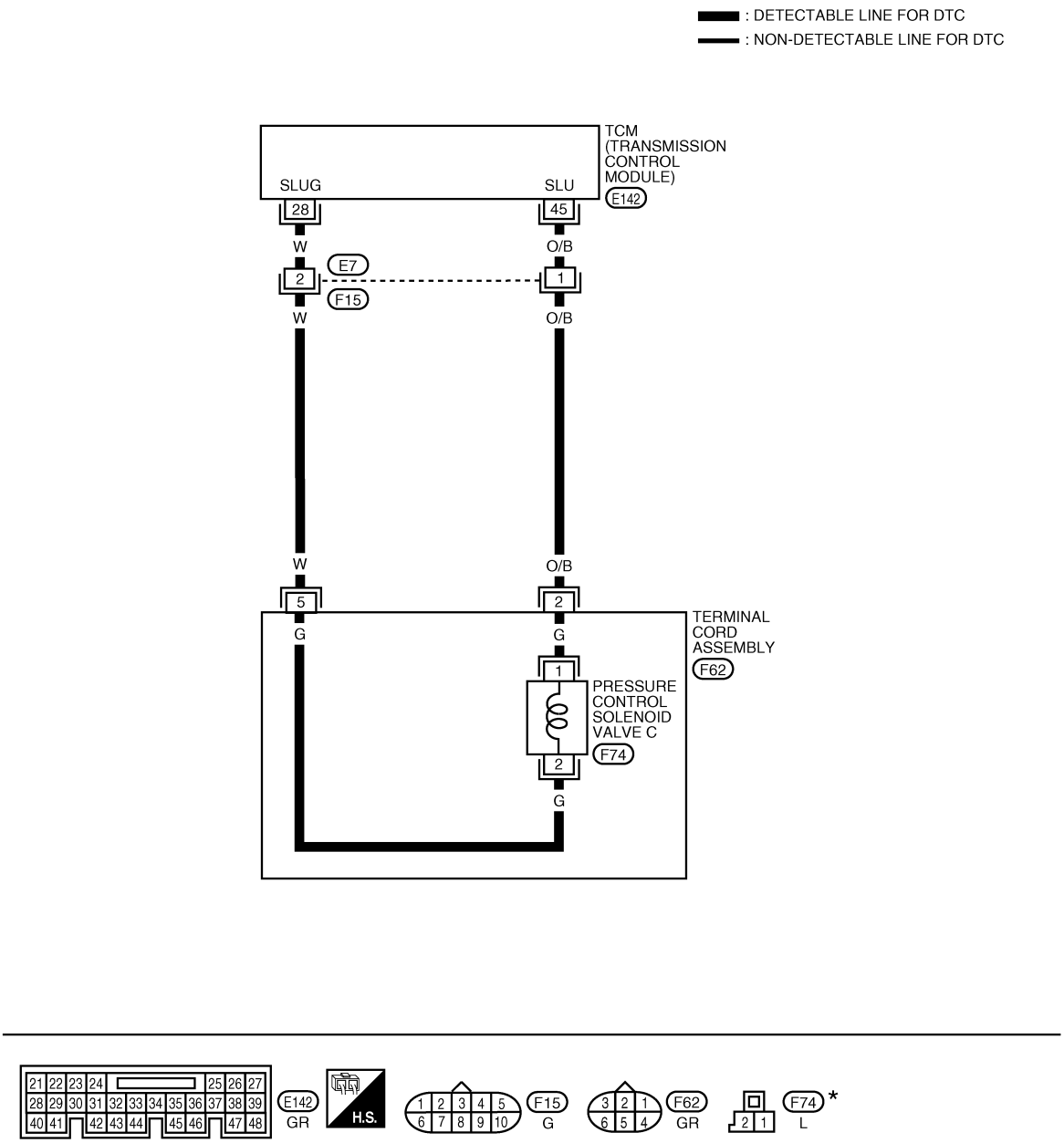

★: THIS CONNECTOR IS NOT SHOWN IN “HARNESS LAYOUT” OF PG SECTION.

BCWA0348E

TCM Input/Output Signal Reference Values. Refer to AT-66, "TCM Input/Output Signal Reference Value".

Diagnosis Procedure

INFOID:0000000001717969

1. CHECK SHIFT SOLENOID VALVE D CIRCUIT

Perform “Diagnostic Procedure” for DTC P0765. Refer to AT-157, "Diagnosis Procedure".

OK or NG

OK >> GO TO 2.
NG >> Repair or replace damaged parts.

2. CHECK PRESSURE CONTROL SOLENOID VALVE C CIRCUIT

Perform “Diagnostic Procedure” for DTC P0795. Refer to AT-176, "Diagnosis Procedure".

OK or NG

OK >> GO TO 3.
NG >> Repair or replace damaged parts.

3. CHECK MALFUNCTIONING ITEM

1. Control valve assembly. Refer to AT-222, "Control Valve Assembly".
2. Disassemble A/T. Refer to AT-232.
3. Check the following item:
- Torque converter clutch. Refer to AT-232.

OK or NG

OK >> GO TO 4.
NG >> Repair or replace damaged parts.

4. CHECK DTC

Perform “DTC Confirmation Procedure”. Refer to AT-127, "DTC Confirmation Procedure".

OK or NG

OK >> **INSPECTION END**
NG >> Replace the control valve assembly. Refer to AT-222, "Control Valve Assembly".

DTC P0745 PRESSURE CONTROL SOLENOID VALVE A (LINE PRESSURE)

Description

INFOID:0000000001717970

- The pressure control solenoid valve A is normally high, 3-port linear pressure control solenoid.
- The pressure control solenoid valve A regulates the oil pump discharge pressure to suit the driving condition in response to a signal sent from the TCM.

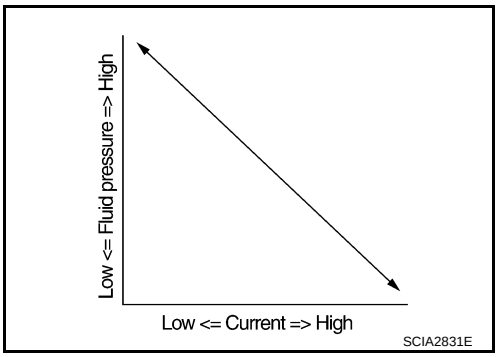

On Board Diagnosis Logic

INFOID:0000000001717971

- This is an OBD-II self-diagnostic item.
- Diagnostic trouble code “PC SOL A(L/PRESS)” with CONSULT-III or P0745 without CONSULT-III is detected under the following conditions.
- When normal voltage is not applied to solenoid due to open, short, and so on.
- When TCM detects as irregular by comparing target value with monitor value.

Possible Cause

INFOID:0000000001717972

- Harness or connectors
  (The solenoid circuit is open or shorted.)
- Pressure control solenoid valve A

DTC Confirmation Procedure

INFOID:0000000001717973

NOTE:
If “DTC Confirmation Procedure” has been previously performed, always turn ignition switch “OFF” and wait at least 10 seconds before performing the next test.
After the repair, perform the following procedure to confirm the malfunction is eliminated.

WITH CONSULT-III

1. Turn ignition switch “ON”. (Do not start engine.)
2. Select “DATA MONITOR” mode for “TRANSMISSION” with CONSULT-III.
3. Start engine.
4. Run engine for at least 13 consecutive seconds at idle speed.
5. If DTC is detected, go to AT-132, "Diagnosis Procedure".

WITH GST

Follow the procedure “With CONSULT-III”.

Wiring Diagram - AT - PC/A

INFOID:0000000001717974

AT-PC/A-01

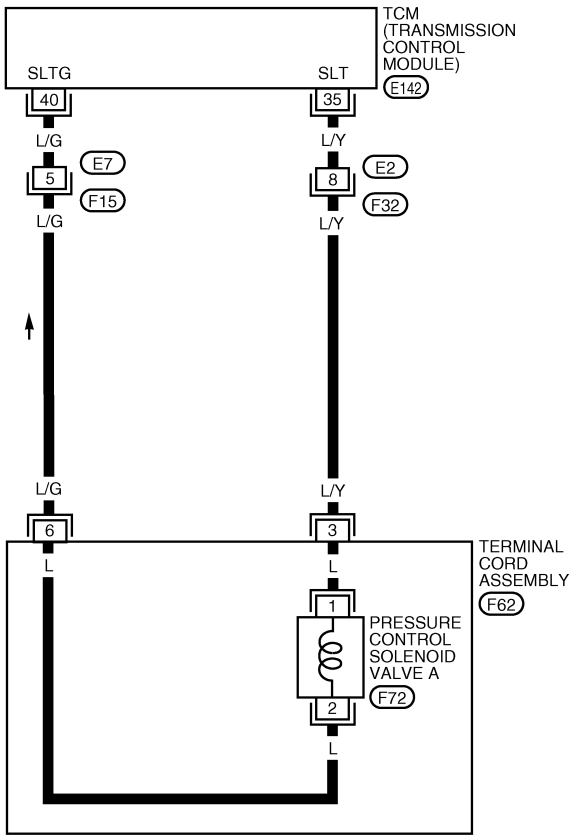

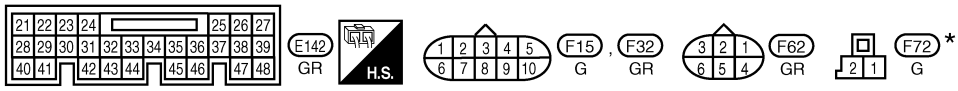

*: THIS CONNECTOR IS NOT SHOWN IN "HARNESS LAYOUT" OF PG SECTION.

BCWA0349E

TCM Input/Output Signal Reference Values. Refer to AT-66, "TCM Input/Output Signal Reference Value".

Diagnosis Procedure

INFOID:0000000001717975

1. CHECK PRESSURE CONTROL SOLENOID VALVE A SIGNAL

With CONSULT-III

1. After warming up the engine and transaxle, turn ignition switch “OFF”.
2. Turn ignition switch “ON”. (Do not start engine.)
3. Select “DATA MONITOR” mode for “TRANSMISSION” with CONSULT-III.
4. Read out the value of “PC SOL A OUT” and “PC SOL A MON”.

Monitor item	Condition	Display value (Approx.)
• PC SOL A OUT • PC SOL A MON	When releasing accelerator pedal with setting selector lever to “P” position.	1.00 A
	When depressing accelerator pedal fully setting selector lever to “P” position.	0.32 A

Without CONSULT-III

1. Start the engine.
2. Check pulse between TCM connector terminals 35 and 40.

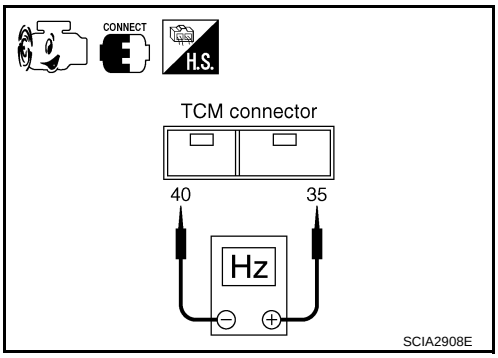

Connector	Terminal	Condition	Data (Approx.)
E142	35 - 40	When engine is running with idle speed and setting selector lever to “P” position.	300 Hz

OK or NG

OK >> GO TO 7.
NG >> GO TO 2.

2. CHECK PRESSURE CONTROL SOLENOID VALVE A CIRCUIT

1. Turn ignition switch “OFF”.
2. Disconnect the TCM connector.
3. Check resistance between TCM connector terminals 35 and 40.

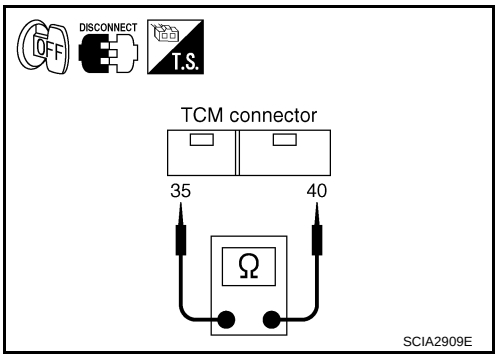

Connector	Terminal	Condition	Resistance (Approx.)
E142	35 - 40	Temperature: 20°C (68°F)	5.0 - 5.6 Ω

OK or NG

OK >> GO TO 7.
NG >> GO TO 3.

3. CHECK TERMINAL CORD ASSEMBLY WITH PRESSURE CONTROL SOLENOID VALVE A

1. Turn ignition switch “OFF”.
2. Disconnect terminal cord assembly harness connector.

3. Check resistance between terminals 3 and 6.

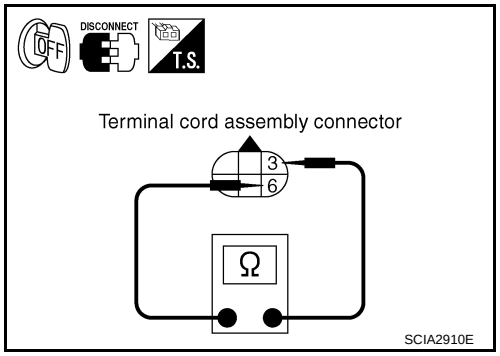

Connector	Terminal	Condition	Resistance (Approx.)
F62	3 - 6	Temperature: 20°C (68°F)	5.0 - 5.6 Ω

OK or NG

OK >> GO TO 4.
NG >> GO TO 5.

4. CHECK HARNESS BETWEEN TCM AND TERMINAL CORD ASSEMBLY

Check the following.
- Open or short-circuit in the harness between TCM and terminal cord assembly.

OK or NG

OK >> GO TO 7.
NG >> Repair or replace damaged parts.

5. CHECK PRESSURE CONTROL SOLENOID VALVE A

1. Remove side cover. Refer to AT-222, "Side cover".
2. Disconnect pressure control solenoid valve A harness connector.
3. Check resistance between terminals 1 and 2.

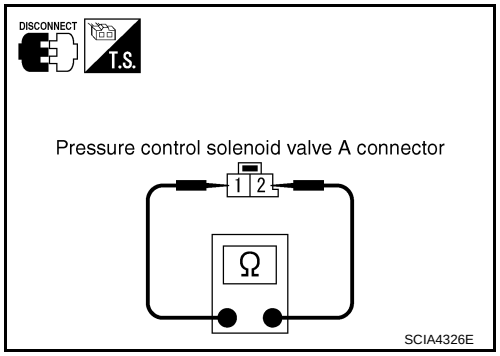

Connector	Terminal	Condition	Resistance (Approx.)
F72	1 - 2	Temperature: 20°C (68°F)	5.0 - 5.6 Ω

OK or NG

OK >> GO TO 6.
NG >> Replace the control valve assembly. Refer to AT-222, "Control Valve Assembly".

6. CHECK HARNESS BETWEEN TERMINAL CORD ASSEMBLY AND PRESSURE CONTROL SOLENOID VALVE A

Check the following.
- Open or short-circuit in the harness between terminal cord assembly and pressure control solenoid valve A.

OK or NG

OK >> GO TO 7.
NG >> Repair or replace transmission wire. Refer to AT-222, "Transmission wire".

7. CHECK DTC

Perform “DTC Confirmation Procedure”. Refer to AT-130, "DTC Confirmation Procedure".

OK or NG

OK >> **INSPECTION END**
NG >> GO TO 8.

8. CHECK TCM

1. Check TCM input/output signal. Refer to AT-66, "TCM Input/Output Signal Reference Value".
2. If NG, recheck TCM pin terminals for damage or loose connection with harness connector.

OK or NG

OK >> **INSPECTION END**
NG >> Repair or replace damaged parts.

Component Inspection

INFOID:0000000001717976

PRESSURE CONTROL SOLENOID VALVE A

1. Remove side cover. Refer to AT-222, "Side cover".
2. Disconnect pressure control solenoid valve A harness connector.
3. Check resistance between terminals 1 and 2.

Connector	Terminal	Condition	Resistance (Approx.)
F72	1 - 2	Temperature: 20°C (68°F)	5.0 - 5.6 Ω

4. If NG, replace the control valve assembly. Refer to AT-222, "Control Valve Assembly".

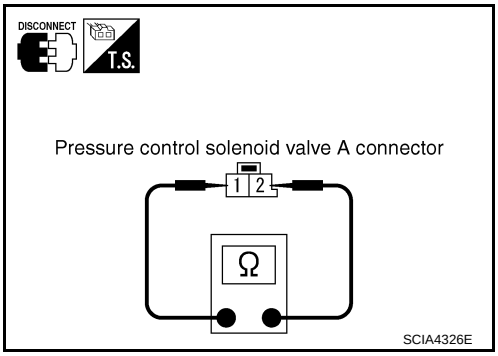

DTC P0750 SHIFT SOLENOID VALVE A

Description

INFOID:0000000001717977

- Shift solenoid valves are installed directly in control valve body. The shift solenoid valves operates of ON and OFF by the control signal from TCM. Combinations of 5 shift solenoid valves, A, B, C, D and E, shifts gear positions.
- The shift solenoid valve A is a normally open, ON-OFF type solenoid.

Gear position	D_1, L_1	D_2, L_2	D_3, L_3	D_4	D_5	Reverse
Shift solenoid valve A	ON (Closed)	OFF (Open)	OFF (Open)	OFF (Open)	OFF (Open)	OFF (Open)

On Board Diagnosis Logic

INFOID:0000000001717978

- This is an OBD-II self-diagnostic item.
- Diagnostic trouble code “SHIFT SOL A” with CONSULT-III or P0750 without CONSULT-III is detected under the following conditions.
- When normal voltage is not applied to solenoid due to open, short, and so on.
- When TCM detects as irregular by comparing target value with monitor value.

Possible Cause

INFOID:0000000001717979

- Harness or connectors
  (The solenoid circuit is open or shorted.)
- Shift solenoid valve A

DTC Confirmation Procedure

INFOID:0000000001717980

CAUTION:
- **Always drive vehicle at a safe speed.**
- **Be careful not to rev engine into the red zone on the tachometer.**

NOTE:
If “DTC Confirmation Procedure” has been previously performed, always turn ignition switch “OFF” and wait at least 10 seconds before performing the next test.
After the repair, perform the following procedure to confirm the malfunction is eliminated.

WITH CONSULT-III

1. Turn ignition switch “ON”. (Do not start engine.)
2. Select “DATA MONITOR” mode for “TRANSMISSION” with CONSULT-III.
3. Start engine.
4. Drive vehicle and allow the following conditions.
   SLCT LVR POSI: “D” position
   GEAR: 1st ⇒ 2nd position
5. If DTC is detected, go to AT-137, "Diagnosis Procedure".

WITH GST

Follow the procedure “With CONSULT-III”.

Wiring Diagram - AT - SSV/A

INFOID:0000000001717981

AT-SSV/A-01

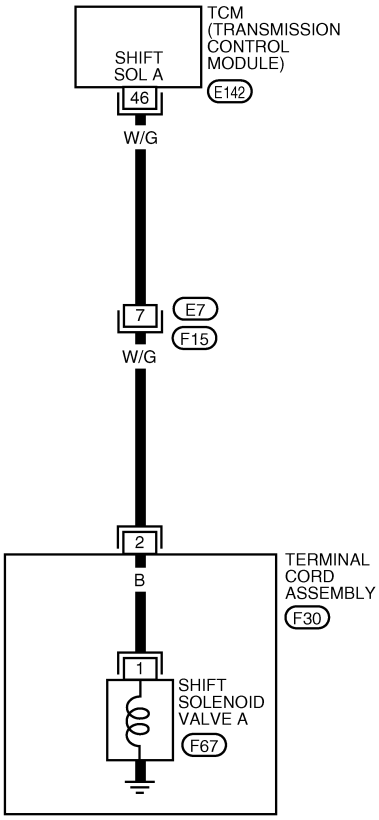

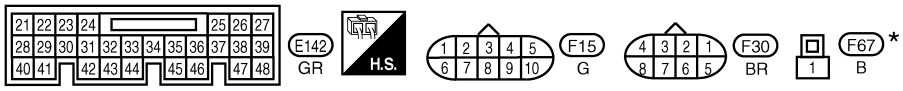

*: THIS CONNECTOR IS NOT SHOWN IN "HARNESS LAYOUT" OF PG SECTION.

BCWA0350E

TCM Input/Output Signal Reference Values. Refer to AT-66, "TCM Input/Output Signal Reference Value".

Diagnosis Procedure

INFOID:0000000001717982

1. CHECK SHIFT SOLENOID VALVE A SIGNAL

With CONSULT-III

1. Start engine.
2. Select “DATA MONITOR” mode for “TRANSMISSION” with CONSULT-III.
3. Drive vehicle and read out the value of “SFT SOL A OUT” and “SFT SOL A MON”.

Monitor item	Condition	Indication
• SFT SOL A OUT • SFT SOL A MON	When shift solenoid valve A operates. (When driving in 1st gear.)	ON
	When shift solenoid valve A does not operate.	OFF

Without CONSULT-III

1. Drive vehicle.
2. Check voltage between TCM connector terminal and ground.

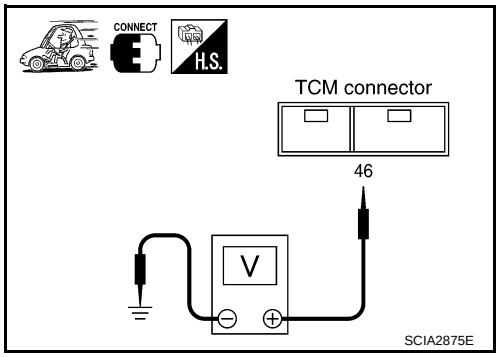

Connector	Terminal	Condition	Voltage (Approx.)
E142	46 - Ground	When shift solenoid valve A operates. (When driving in 1st gear.)	Battery voltage
		When shift solenoid valve A does not operate.	0V

OK or NG

OK >> GO TO 7.
NG >> GO TO 2.

2. CHECK SHIFT SOLENOID VALVE A CIRCUIT

1. Turn ignition switch “OFF”.
2. Disconnect the TCM connector.
3. Check resistance between TCM connector terminal 46 and ground.

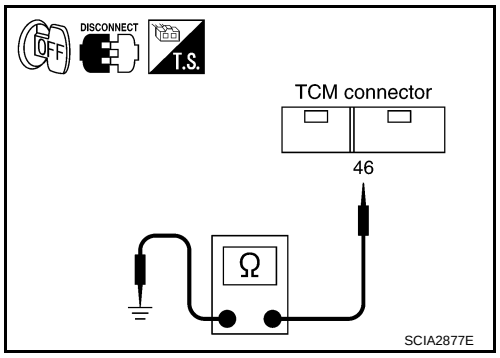

Connector	Terminal	Condition	Resistance (Approx.)
E142	46 - Ground	Temperature: 20°C (68°F)	11 - 16 Ω

OK or NG

OK >> GO TO 7.
NG >> GO TO 3.

3. CHECK TERMINAL CORD ASSEMBLY WITH SHIFT SOLENOID VALVE A

1. Turn ignition switch “OFF”.
2. Disconnect terminal cord assembly harness connector.

3. Check resistance between terminal 2 and ground.

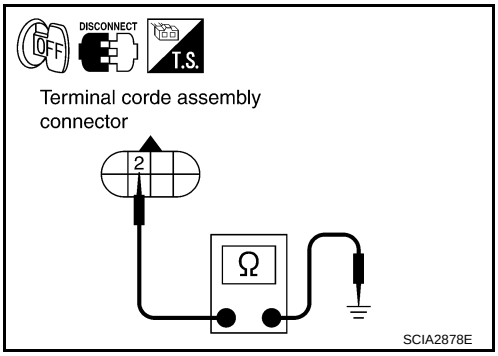

Connector	Terminal	Condition	Resistance (Approx.)
F30	2 - Ground	Temperature: 20°C (68°F)	11 - 16 Ω

OK or NG

OK >> GO TO 4.
NG >> GO TO 5.

4. CHECK HARNESS BETWEEN TCM AND TERMINAL CORD ASSEMBLY

Check the following.
- Open or short-circuit in the harness between TCM and terminal cord assembly.

OK or NG

OK >> GO TO 7.
NG >> Repair or replace damaged parts.

5. CHECK SHIFT SOLENOID VALVE A

1. Remove side cover. Refer to AT-222, "Side cover".
2. Disconnect shift solenoid valve A harness connector.
3. Check resistance between terminal 1 and ground.

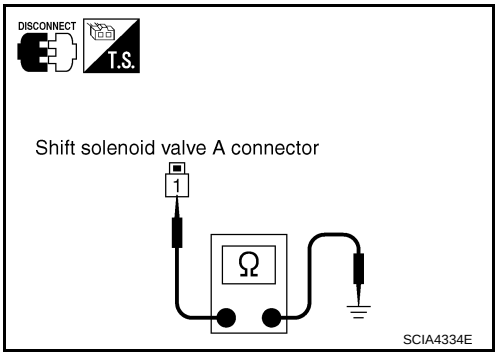

Connector	Terminal	Condition	Resistance (Approx.)
F67	1 - Ground	Temperature: 20°C (68°F)	11 - 16 Ω

OK or NG

OK >> GO TO 6.
NG >> Replace the control valve assembly. Refer to AT-222, "Control Valve Assembly".

6. CHECK HARNESS BETWEEN TERMINAL CORD ASSEMBLY AND SHIFT SOLENOID VALVE A

Check the following.
- Open or short-circuit in the harness between terminal cord assembly and shift solenoid valve A.

OK or NG

OK >> GO TO 7.
NG >> Repair or replace transmission wire. Refer to AT-222, "Transmission wire".

7. CHECK DTC

Perform “DTC Confirmation Procedure”. Refer to AT-135, "DTC Confirmation Procedure".

OK or NG

OK >> **INSPECTION END**
NG >> GO TO 8.

8. CHECK TCM

1. Check TCM input/output signal. Refer to AT-66, "TCM Input/Output Signal Reference Value".
2. If NG, recheck TCM pin terminals for damage or loose connection with harness connector.

OK or NG

OK >> **INSPECTION END**
NG >> Repair or replace damaged parts.

Component Inspection

INFOID:0000000001717983

SHIFT SOLENOID VALVE A

1. Remove side cover. Refer to AT-222, "Side cover".
2. Disconnect shift solenoid valve A harness connector.
3. Check resistance between terminal 1 and ground.

Connector	Terminal	Condition	Resistance (Approx.)
F67	1 - Ground	Temperature: 20°C (68°F)	11 - 16 Ω

4. If NG, replace the control valve assembly. Refer to AT-222, "Control Valve Assembly".

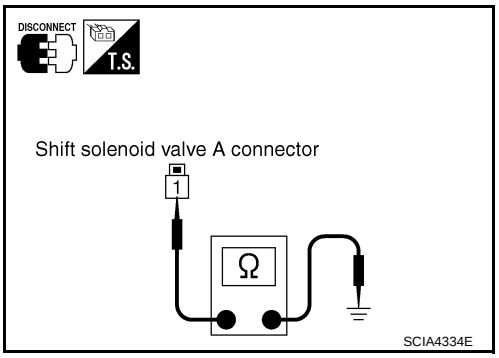

DTC P0755 SHIFT SOLENOID VALVE B

Description

INFOID:0000000001717984

- Shift solenoid valves are installed directly in control valve body. The shift solenoid valves operates of ON and OFF by the control signal from TCM. Combinations of 5 shift solenoid valves, A, B, C, D and E, shifts gear positions.
- The shift solenoid valve B is a normally closed, ON-OFF type solenoid.

Gear position	D_1, L_1	D_2, L_2	D_3, L_3	D_4	D_5	Reverse
Shift solenoid valve B	ON (Open)	OFF (Closed)	OFF (Closed)	OFF (Closed)	ON (Open)	OFF (Closed)

On Board Diagnosis Logic

INFOID:0000000001717985

- This is an OBD-II self-diagnostic item.
- Diagnostic trouble code “SHIFT SOL B” with CONSULT-III or P0755 without CONSULT-III is detected under the following conditions.
- When normal voltage is not applied to solenoid due to open, short, and so on.
- When TCM detects as irregular by comparing target value with monitor value.

Possible Cause

INFOID:0000000001717986

- Harness or connectors
  (The solenoid circuit is open or shorted.)
- Shift solenoid valve B

DTC Confirmation Procedure

INFOID:0000000001717987

CAUTION:
- **Always drive vehicle at a safe speed.**
- **Be careful not to rev engine into the red zone on the tachometer.**

NOTE:
If “DTC Confirmation Procedure” has been previously performed, always turn ignition switch “OFF” and wait at least 10 seconds before performing the next test.
After the repair, perform the following procedure to confirm the malfunction is eliminated.

WITH CONSULT-III

1. Turn ignition switch “ON”. (Do not start engine.)
2. Select “DATA MONITOR” mode for “TRANSMISSION” with CONSULT-III.
3. Start engine.
4. Drive vehicle and allow the following conditions.
   SLCT LVR POSI: “D” position
   GEAR: 1st ⇒ 2nd and 4th ⇒ 5th position
5. If DTC is detected, go to AT-142, "Diagnosis Procedure".

WITH GST

Follow the procedure “With CONSULT-III”.

Wiring Diagram - AT - SSV/B

INFOID:0000000001717988

AT-SSV/B-01

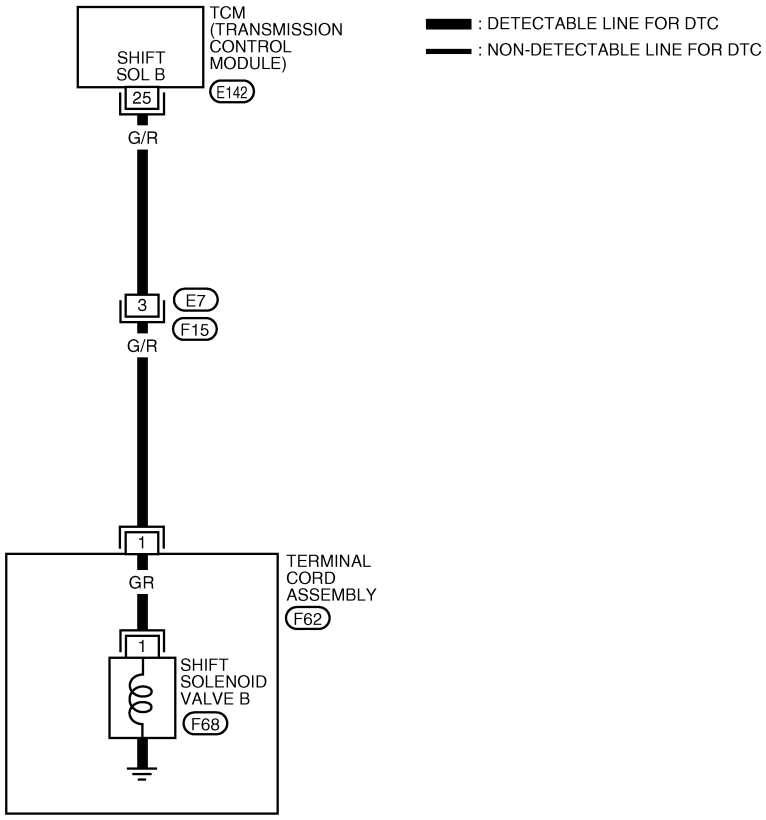

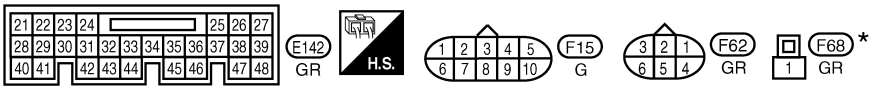

★: THIS CONNECTOR IS NOT SHOWN IN “HARNESS LAYOUT” OF PG SECTION.

BCWA0351E

TCM Input/Output Signal Reference Values. Refer to AT-66, "TCM Input/Output Signal Reference Value".

Diagnosis Procedure

INFOID:0000000001717989

1. CHECK SHIFT SOLENOID VALVE B SIGNAL

With CONSULT-III

1. Start engine.
2. Select “DATA MONITOR” mode for “TRANSMISSION” with CONSULT-III.
3. Drive vehicle and read out the value of “SFT SOL B OUT” and “SFT SOL B MON”.

Monitor item	Condition	Indication
• SFT SOL B OUT • SFT SOL B MON	When shift solenoid valve B operates. (When driving in 1st or 5th gear.)	ON
	When shift solenoid valve B does not operate.	OFF

Without CONSULT-III

1. Drive vehicle.
2. Check voltage between TCM connector terminal and ground.

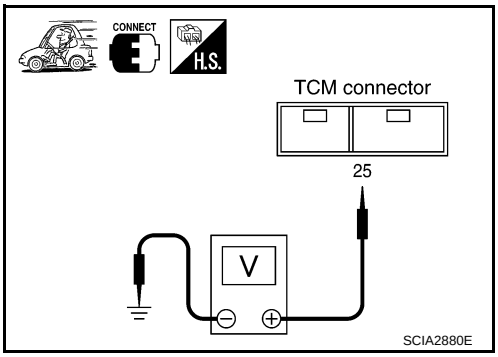

Connector	Terminal	Condition	Voltage (Approx.)
E142	25 - Ground	When shift solenoid valve B operates. (When driving in 1st or 5th gear.)	Battery voltage
		When shift solenoid valve B does not operate.	0V

OK or NG

OK >> GO TO 7.
NG >> GO TO 2.

2. CHECK SHIFT SOLENOID VALVE B CIRCUIT

1. Turn ignition switch “OFF”.
2. Disconnect the TCM connector.
3. Check resistance between TCM connector terminal 25 and ground.

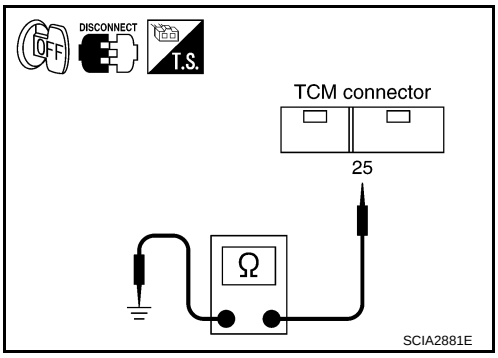

Connector	Terminal	Condition	Resistance (Approx.)
E142	25 - Ground	Temperature: 20°C (68°F)	11 - 16 Ω

OK or NG

OK >> GO TO 7.
NG >> GO TO 3.

3. CHECK TERMINAL CORD ASSEMBLY WITH SHIFT SOLENOID VALVE B

1. Turn ignition switch “OFF”.
2. Disconnect terminal cord assembly harness connector.

3. Check resistance between terminal 1 and ground.

Connector	Terminal	Condition	Resistance (Approx.)
F62	1 - Ground	Temperature: 20°C (68°F)	11 - 16 Ω

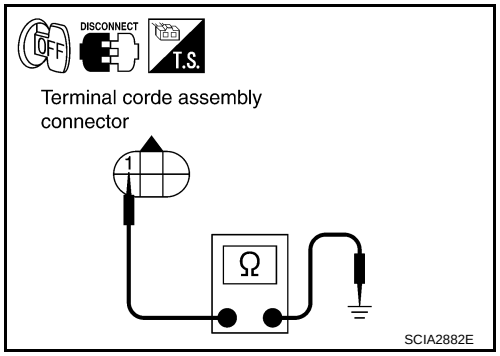

OK or NG

OK >> GO TO 4.
NG >> GO TO 5.

4. CHECK HARNESS BETWEEN TCM AND TERMINAL CORD ASSEMBLY

Check the following.
- Open or short-circuit in the harness between TCM and terminal cord assembly.

OK or NG

OK >> GO TO 7.
NG >> Repair or replace damaged parts.

5. CHECK SHIFT SOLENOID VALVE B

1. Remove side cover. Refer to AT-222, "Side cover".
2. Disconnect shift solenoid valve B harness connector.
3. Check resistance between terminal 1 and ground.

Connector	Terminal	Condition	Resistance (Approx.)
F68	1 - Ground	Temperature: 20°C (68°F)	11 - 16 Ω

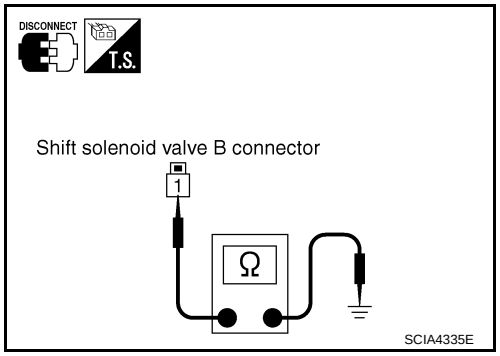

OK or NG

OK >> GO TO 6.
NG >> Replace the control valve assembly. Refer to AT-222, "Control Valve Assembly".

6. CHECK HARNESS BETWEEN TERMINAL CORD ASSEMBLY AND SHIFT SOLENOID VALVE B

Check the following.
- Open or short-circuit in the harness between terminal cord assembly and shift solenoid valve B.

OK or NG

OK >> GO TO 7.
NG >> Repair or replace transmission wire. Refer to AT-222, "Transmission wire".

7. CHECK DTC

Perform “DTC Confirmation Procedure”. Refer to AT-140, "DTC Confirmation Procedure".

OK or NG

OK >> **INSPECTION END**
NG >> GO TO 8.

8. CHECK TCM

1. Check TCM input/output signal. Refer to AT-66, "TCM Input/Output Signal Reference Value".
2. If NG, recheck TCM pin terminals for damage or loose connection with harness connector.

OK or NG

OK >> **INSPECTION END**
NG >> Repair or replace damaged parts.

Component Inspection

INFOID:0000000001717990

SHIFT SOLENOID VALVE B

1. Remove side cover. Refer to AT-222, "Side cover".
2. Disconnect shift solenoid valve B harness connector.
3. Check resistance between terminal 1 and ground.

Connector	Terminal	Condition	Resistance (Approx.)
F68	1 - Ground	Temperature: 20°C (68°F)	11 - 16 Ω

4. If NG, replace the control valve assembly. Refer to AT-222, "Control Valve Assembly".

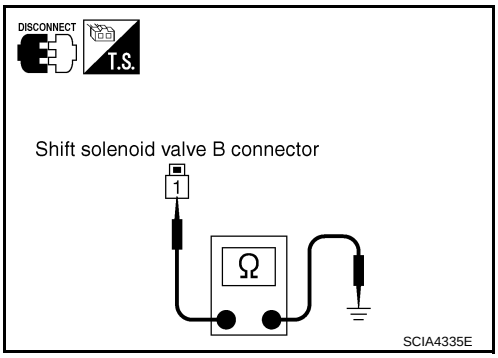

DTC P0760 SHIFT SOLENOID VALVE C

Description

INFOID:0000000001717991

- Shift solenoid valves are installed directly in control valve body. The shift solenoid valves operates of ON and OFF by the control signal from TCM. Combinations of 5 shift solenoid valves, A, B, C, D and E, shifts gear positions.
- The shift solenoid valve C is a normally closed, ON-OFF type solenoid.

Gear position	D_1, L_1	D_2, L_2	D_3, L_3	D_4	D_5	Reverse
Shift solenoid valve C	ON (Open)	ON (Open)	ON (Open)	OFF (Closed)	OFF (Closed)	ON (Open)

On Board Diagnosis Logic

INFOID:0000000001717992

- This is an OBD-II self-diagnostic item.
- Diagnostic trouble code “SHIFT SOL C” with CONSULT-III or P0760 without CONSULT-III is detected under the following conditions.
- When normal voltage is not applied to solenoid due to open, short, and so on.
- When TCM detects as irregular by comparing target value with monitor value.

Possible Cause

INFOID:0000000001717993

- Harness or connectors
  (The solenoid circuit is open or shorted.)
- Shift solenoid valve C

DTC Confirmation Procedure

INFOID:0000000001717994

CAUTION:
- **Always drive vehicle at a safe speed.**
- **Be careful not to rev engine into the red zone on the tachometer.**

NOTE:
If “DTC Confirmation Procedure” has been previously performed, always turn ignition switch “OFF” and wait at least 10 seconds before performing the next test.
After the repair, perform the following procedure to confirm the malfunction is eliminated.

WITH CONSULT-III

1. Turn ignition switch “ON”. (Do not start engine.)
2. Select “DATA MONITOR” mode for “TRANSMISSION” with CONSULT-III.
3. Start engine.
4. Drive vehicle and allow the following conditions.
   SLCT LVR POSI: “D” position
   GEAR: 3rd ⇒ 4th position
5. If DTC is detected, go to AT-147, "Diagnosis Procedure".

WITH GST

Follow the procedure “With CONSULT-III”.

Wiring Diagram - AT - SSV/C

INFOID:0000000001717995

AT-SSV/C-01

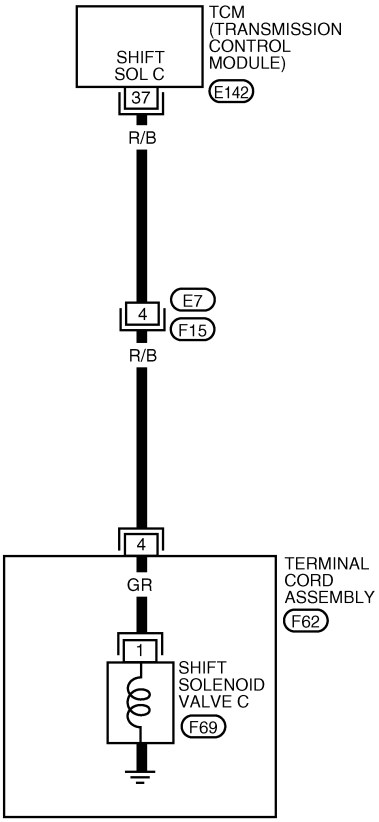

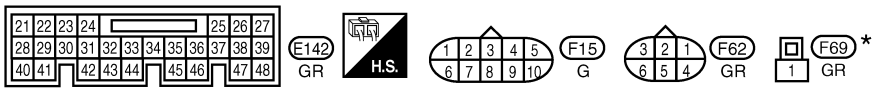

*: THIS CONNECTOR IS NOT SHOWN IN “HARNESS LAYOUT” OF PG SECTION.

BCWA0352E

TCM Input/Output Signal Reference Values. Refer to AT-66, "TCM Input/Output Signal Reference Value" .

Diagnosis Procedure

INFOID:0000000001717996

1. CHECK SHIFT SOLENOID VALVE C SIGNAL

With CONSULT-III

1. Start engine.
2. Select “DATA MONITOR” mode for “TRANSMISSION” with CONSULT-III.
3. Drive vehicle and read out the value of “SFT SOL C OUT” and “SFT SOL C MON”.

Monitor item	Condition	Indication
• SFT SOL C OUT • SFT SOL C MON	When shift solenoid valve C operates. (When driving in 1st, 2nd, 3rd or reverse gear.)	ON
	When shift solenoid valve C does not operate.	OFF

Without CONSULT-III

1. Drive vehicle.
2. Check voltage between TCM connector terminal and ground.

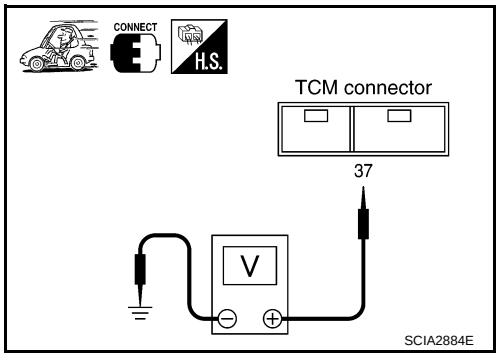

Connector	Terminal	Condition	Voltage (Approx.)
E142	37 - Ground	When shift solenoid valve C operates. (When driving in 1st, 2nd, 3rd or reverse gear.)	Battery voltage
		When shift solenoid valve C does not operate.	0V

OK or NG

OK >> GO TO 7.
NG >> GO TO 2.

2. CHECK SHIFT SOLENOID VALVE C CIRCUIT

1. Turn ignition switch “OFF”.
2. Disconnect the TCM connector.
3. Check resistance between TCM connector terminal 37 and ground.

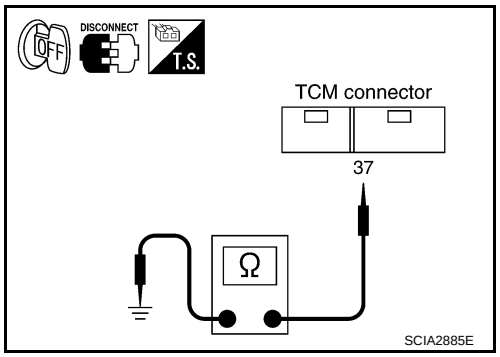

Connector	Terminal	Condition	Resistance (Approx.)
E142	37 - Ground	Temperature: 20°C (68°F)	11 - 16 Ω

OK or NG

OK >> GO TO 7.
NG >> GO TO 3.

3. CHECK TERMINAL CORD ASSEMBLY WITH SHIFT SOLENOID VALVE C

1. Turn ignition switch “OFF”.
2. Disconnect terminal cord assembly harness connector.

3. Check resistance between terminal 4 and ground.

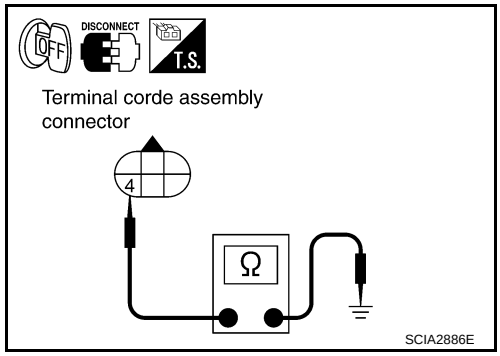

Connector	Terminal	Condition	Resistance (Approx.)
F62	4 - Ground	Temperature: 20°C (68°F)	11 - 16 Ω

OK or NG

OK >> GO TO 4.
NG >> GO TO 5.

4. CHECK HARNESS BETWEEN TCM AND TERMINAL CORD ASSEMBLY

Check the following.
- Open or short-circuit in the harness between TCM and terminal cord assembly.

OK or NG

OK >> GO TO 7.
NG >> Repair or replace damaged parts.

5. CHECK SHIFT SOLENOID VALVE C

1. Remove side cover. Refer to AT-222, "Side cover".
2. Disconnect shift solenoid valve C harness connector.
3. Check resistance between terminal 1 and ground.

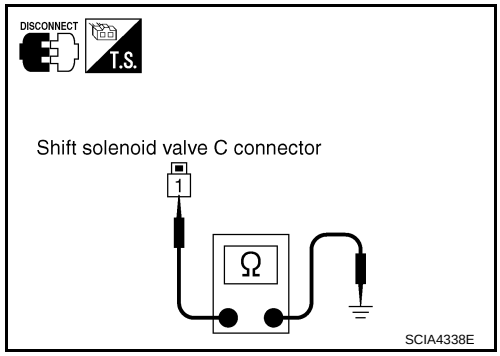

Connector	Terminal	Condition	Resistance (Approx.)
F69	1 - Ground	Temperature: 20°C (68°F)	11 - 16 Ω

OK or NG

OK >> GO TO 6.
NG >> Replace the control valve assembly. Refer to AT-222, "Control Valve Assembly".

6. CHECK HARNESS BETWEEN TERMINAL CORD ASSEMBLY AND SHIFT SOLENOID VALVE C

Check the following.
- Open or short-circuit in the harness between terminal cord assembly and shift solenoid valve C.

OK or NG

OK >> GO TO 7.
NG >> Repair or replace transmission wire.

7. CHECK DTC

Perform “DTC Confirmation Procedure”. Refer to AT-145, "DTC Confirmation Procedure".

OK or NG

OK >> **INSPECTION END**
NG >> GO TO 8.

8. CHECK TCM

1. Check TCM input/output signal. Refer to AT-66, "TCM Input/Output Signal Reference Value".
2. If NG, recheck TCM pin terminals for damage or loose connection with harness connector.

OK or NG

OK >> **INSPECTION END**
NG >> Repair or replace damaged parts.

Component Inspection

INFOID:0000000001717997

SHIFT SOLENOID VALVE C

1. Remove side cover. Refer to AT-222, "Side cover".
2. Disconnect shift solenoid valve C harness connector.
3. Check resistance between terminal 1 and ground.

Connector	Terminal	Condition	Resistance (Approx.)
F69	1 - Ground	Temperature: 20°C (68°F)	11 - 16 Ω

4. If NG, replace the control valve assembly. Refer to AT-222, "Control Valve Assembly".

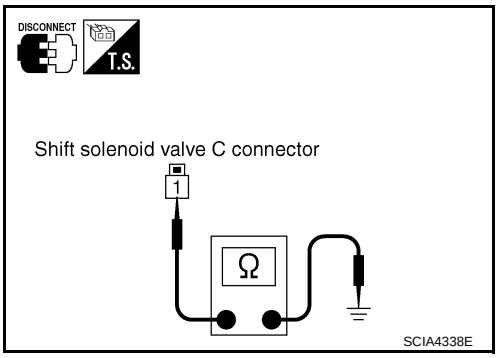

DTC P0762 SHIFT SOLENOID VALVE C STUCK ON

Description

INFOID:0000000001717998

- This malfunction will not be detected while the O/D OFF indicator lamp is indicating another self-diagnosis malfunction.
- This is not caused by electrical malfunction (circuits open or shorted) but by mechanical malfunction such as control valve sticking, improper solenoid valve operation, etc.
- Shift solenoid valves are installed directly in control valve body. The shift solenoid valves operates of ON and OFF by the control signal from TCM. Combinations of 5 shift solenoid valves, A, B, C, D and E, shifts gear positions.
- The shift solenoid valve C is a normally closed, ON-OFF type solenoid.

Gear position	D_1, L_1	D_2, L_2	D_3, L_3	D_4	D_5	Reverse
Shift solenoid valve C	ON (Open)	ON (Open)	ON (Open)	OFF (Closed)	OFF (Closed)	ON (Open)

On Board Diagnosis Logic

INFOID:0000000001717999

- This is an OBD-II self-diagnostic item.
- Diagnostic trouble code “SFT SOL C STUCK ON” with CONSULT-III or P0762 without CONSULT-III is detected when condition of shift solenoid valve C is different from monitor value, and relation between gear position and actual gear ratio is irregular.

Possible Cause

INFOID:0000000001718000

- Shift solenoid valve C
  (On stick.)
- Hydraulic control circuit

DTC Confirmation Procedure

INFOID:0000000001718001

CAUTION:
- **Always drive vehicle at a safe speed.**
- **Be careful not to rev engine into the red zone on the tachometer.**

NOTE:
If “DTC Confirmation Procedure” has been previously performed, always turn ignition switch “OFF” and wait at least 10 seconds before performing the next test.
After the repair, perform the following procedure to confirm the malfunction is eliminated.

WITH CONSULT-III

1. Turn ignition switch “ON”. (Do not start engine.)
2. Select “DATA MONITOR” mode for “TRANSMISSION” with CONSULT-III.
3. Start engine.
4. Drive vehicle and allow the following conditions.
   SLCT LVR POSI: “D” position
   GEAR: 3rd ⇒ 4th position
   ACCELE ANGLE: More than 10 %
5. If DTC is detected, go to AT-152, "Diagnosis Procedure".

WITH GST

Follow the procedure “With CONSULT-III”.

Wiring Diagram - AT - SSV/CS

INFOID:0000000001718002

AT-SSV/CS-01

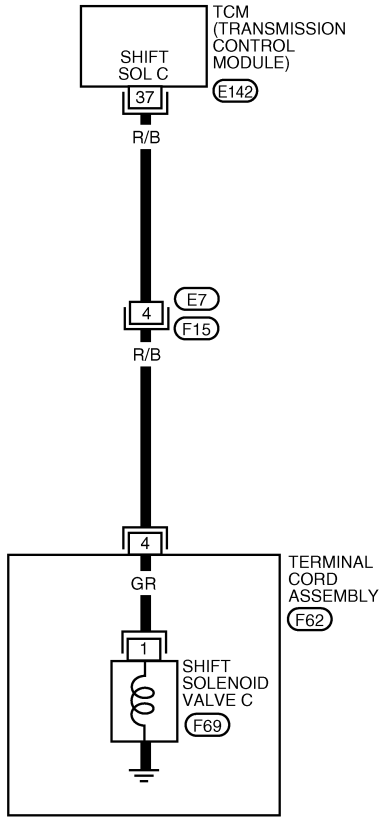

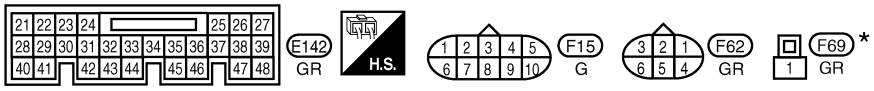

*: THIS CONNECTOR IS NOT SHOWN IN “HARNESS LAYOUT” OF PG SECTION.

BCWA0353E

TCM Input/Output Signal Reference Values. Refer to AT-66, "TCM Input/Output Signal Reference Value" .

Diagnosis Procedure

INFOID:0000000001718003

1. CHECK SHIFT SOLENOID VALVE C SIGNAL

With CONSULT-III

1. Start engine.
2. Select “DATA MONITOR” mode for “TRANSMISSION” with CONSULT-III.
3. Drive vehicle and read out the value of “SFT SOL C OUT” and “SFT SOL C MON”.

Monitor item	Condition	Indication
• SFT SOL C OUT • SFT SOL C MON	When shift solenoid valve C operates. (When driving in 1st, 2nd, 3rd or reverse gear.)	ON
	When shift solenoid valve C does not operate.	OFF

Without CONSULT-III

1. Drive vehicle.
2. Check voltage between TCM connector terminal and ground.

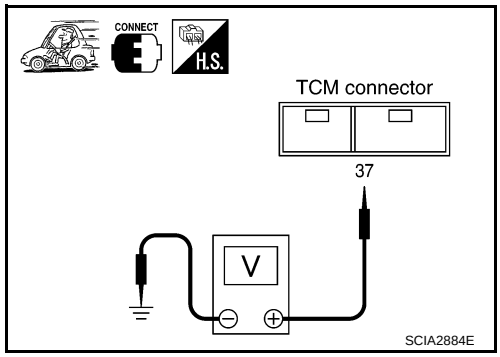

Connector	Terminal	Condition	Voltage (Approx.)
E142	37 - Ground	When shift solenoid valve C operates. (When driving in 1st, 2nd, 3rd or reverse gear.)	Battery voltage
		When shift solenoid valve C does not operate.	0V

OK or NG

OK >> GO TO 7.
NG >> GO TO 2.

2. CHECK SHIFT SOLENOID VALVE C CIRCUIT

1. Turn ignition switch “OFF”.
2. Disconnect the TCM connector.
3. Check resistance between TCM connector terminal 37 and ground.

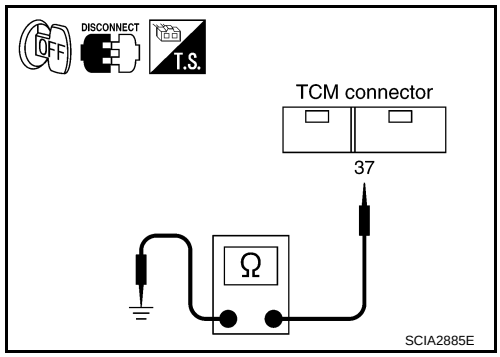

Connector	Terminal	Condition	Resistance (Approx.)
E142	37 - Ground	Temperature: 20°C (68°F)	11 - 16 Ω

OK or NG

OK >> GO TO 7.
NG >> GO TO 3.

3. CHECK TERMINAL CORD ASSEMBLY WITH SHIFT SOLENOID VALVE C

1. Turn ignition switch “OFF”.
2. Disconnect terminal cord assembly harness connector.

3. Check resistance between terminal 4 and ground.

Connector	Terminal	Condition	Resistance (Approx.)
F62	4 - Ground	Temperature: 20°C (68°F)	11 - 16 Ω

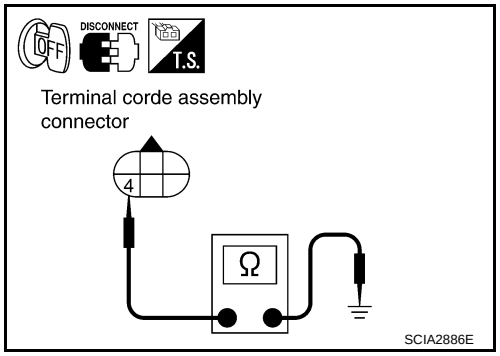

OK or NG

OK >> GO TO 4.
NG >> GO TO 5.

4. CHECK HARNESS BETWEEN TCM AND TERMINAL CORD ASSEMBLY

Check the following.
- Open or short-circuit in the harness between TCM and terminal cord assembly.

OK or NG

OK >> GO TO 7.
NG >> Repair or replace damaged parts.

5. CHECK SHIFT SOLENOID VALVE C

1. Remove side cover. Refer to AT-222, "Side cover".
2. Disconnect shift solenoid valve C harness connector.
3. Check resistance between terminal 1 and ground.

Connector	Terminal	Condition	Resistance (Approx.)
F69	1 - Ground	Temperature: 20°C (68°F)	11 - 16 Ω

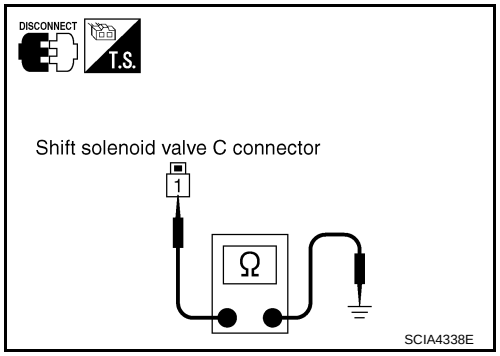

OK or NG

OK >> GO TO 6.
NG >> Replace the control valve assembly. Refer to AT-222, "Control Valve Assembly".

6. CHECK HARNESS BETWEEN TERMINAL CORD ASSEMBLY AND SHIFT SOLENOID VALVE C

Check the following.
- Open or short-circuit in the harness between terminal cord assembly and shift solenoid valve C.

OK or NG

OK >> GO TO 7.
NG >> Repair or replace transmission wire.

7. CHECK DTC

Perform “DTC Confirmation Procedure”. Refer to AT-150, "DTC Confirmation Procedure".

OK or NG

OK >> **INSPECTION END**
NG >> GO TO 8.

8. CHECK TCM

1. Check TCM input/output signal. Refer to AT-66, "TCM Input/Output Signal Reference Value".
2. If NG, recheck TCM pin terminals for damage or loose connection with harness connector.

OK or NG

OK >> **INSPECTION END**
NG >> Repair or replace damaged parts.

Component Inspection

INFOID:0000000001718004

SHIFT SOLENOID VALVE C

1. Remove side cover. Refer to AT-222, "Side cover".
2. Disconnect shift solenoid valve C harness connector.
3. Check resistance between terminal 1 and ground.

Connector	Terminal	Condition	Resistance (Approx.)
F69	1 - Ground	Temperature: 20°C (68°F)	11 - 16 Ω

4. If NG, replace the control valve assembly. Refer to AT-222, "Control Valve Assembly".

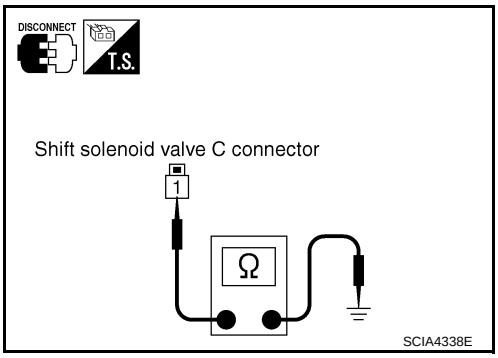

DTC P0765 SHIFT SOLENOID VALVE D

Description

INFOID:0000000001718005

- Shift solenoid valves are installed directly in control valve body. The shift solenoid valves operates of ON and OFF by the control signal from TCM. Combinations of 5 shift solenoid valves, A, B, C, D and E, shifts gear positions.
- The shift solenoid valve D is a normally open, ON-OFF type solenoid.

Gear position	D_1, L_1	D_2, L_2	D_3, L_3	D_4	D_5	Reverse
Shift solenoid valve D	OFF (Open)	OFF (Open)	ON (Closed)	ON (Closed)	ON (Closed)	OFF (Open)

On Board Diagnosis Logic

INFOID:0000000001718006

- This is an OBD-II self-diagnostic item.
- Diagnostic trouble code “SHIFT SOL D” with CONSULT-III or P0765 without CONSULT-III is detected under the following conditions.
- When normal voltage is not applied to solenoid due to open, short, and so on.
- When TCM detects as irregular by comparing target value with monitor value.

Possible Cause

INFOID:0000000001718007

- Harness or connectors
  (The solenoid circuit is open or shorted.)
- Shift solenoid valve D

DTC Confirmation Procedure

INFOID:0000000001718008

CAUTION:
- **Always drive vehicle at a safe speed.**
- **Be careful not to rev engine into the red zone on the tachometer.**

NOTE:
If “DTC Confirmation Procedure” has been previously performed, always turn ignition switch “OFF” and wait at least 10 seconds before performing the next test.
After the repair, perform the following procedure to confirm the malfunction is eliminated.

WITH CONSULT-III

1. Turn ignition switch “ON”. (Do not start engine.)
2. Select “DATA MONITOR” mode for “TRANSMISSION” with CONSULT-III.
3. Start engine.
4. Drive vehicle and allow the following conditions.
   SLCT LVR POSI: “D” position
   GEAR: 2nd ⇒ 3rd position
5. If DTC is detected, go to AT-157, "Diagnosis Procedure".

WITH GST

Follow the procedure “With CONSULT-III”.

Wiring Diagram - AT - SSV/D

INFOID:0000000001718009

AT-SSV/D-01

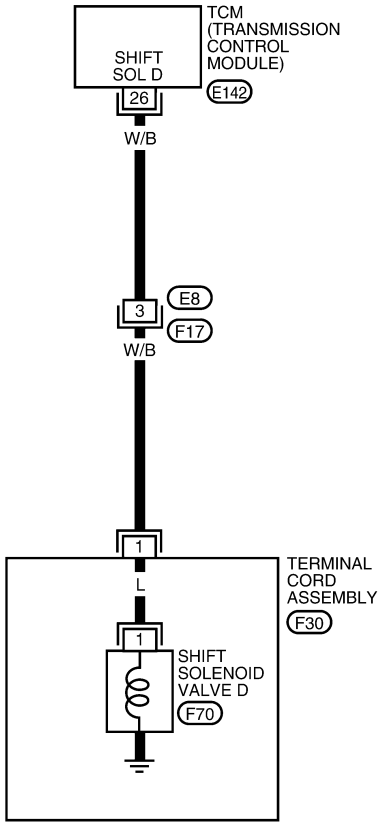

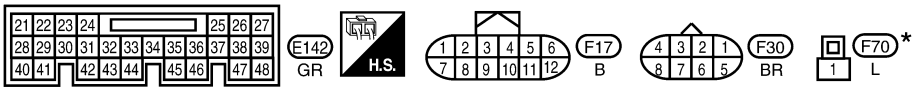

*: THIS CONNECTOR IS NOT SHOWN IN “HARNESS LAYOUT” OF PG SECTION.

BCWA0600E

TCM Input/Output Signal Reference Values. Refer to AT-66, "TCM Input/Output Signal Reference Value".

Diagnosis Procedure

INFOID:0000000001718010

1. CHECK SHIFT SOLENOID VALVE D SIGNAL

With CONSULT-III

1. Start engine.
2. Select “DATA MONITOR” mode for “TRANSMISSION” with CONSULT-III.
3. Drive vehicle and read out the value of “SFT SOL D OUT” and “SFT SOL D MON”.

Monitor item	Condition	Indication
• SFT SOL D OUT • SFT SOL D MON	When shift solenoid valve D operates. (When driving in 3rd, 4th or 5th gear.)	ON
	When shift solenoid valve D does not operate.	OFF

Without CONSULT-III

1. Drive vehicle.
2. Check voltage between TCM connector terminal and ground.

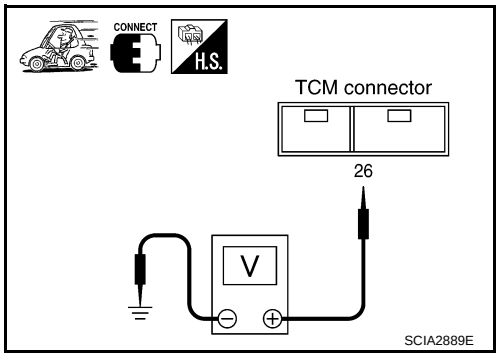

Connector	Terminal	Condition	Voltage (Approx.)
E142	26 - Ground	When shift solenoid valve D operates. (When driving in 3rd, 4th or 5th gear.)	Battery voltage
		When shift solenoid valve D does not operate.	0V

OK or NG

OK >> GO TO 7.
NG >> GO TO 2.

2. CHECK SHIFT SOLENOID VALVE D CIRCUIT

1. Turn ignition switch “OFF”.
2. Disconnect the TCM connector.
3. Check resistance between TCM connector terminal 26 and ground.

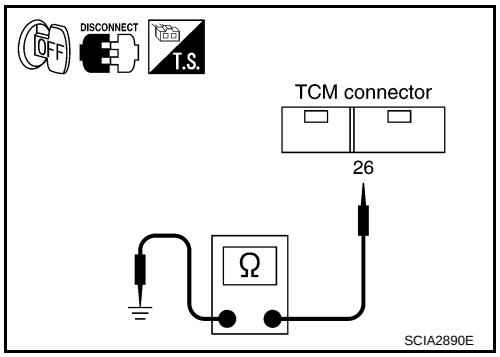

Connector	Terminal	Condition	Resistance (Approx.)
E142	26 - Ground	Temperature: 20°C (68°F)	11 - 16 Ω

OK or NG

OK >> GO TO 7.
NG >> GO TO 3.

3. CHECK TERMINAL CORD ASSEMBLY WITH SHIFT SOLENOID VALVE D

1. Turn ignition switch “OFF”.
2. Disconnect terminal cord assembly harness connector.

3. Check resistance between terminal 1 and ground.

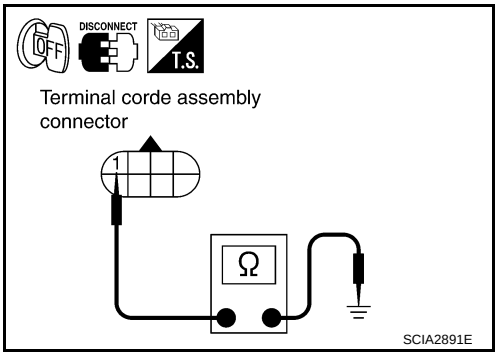

Connector	Terminal	Condition	Resistance (Approx.)
F30	1 - Ground	Temperature: 20°C (68°F)	11 - 16 Ω

OK or NG

OK >> GO TO 4.
NG >> GO TO 5.

4. CHECK HARNESS BETWEEN TCM AND TERMINAL CORD ASSEMBLY

Check the following.
- Open or short-circuit in the harness between TCM and terminal cord assembly.

OK or NG

OK >> GO TO 7.
NG >> Repair or replace damaged parts.

5. CHECK SHIFT SOLENOID VALVE D

1. Remove side cover. Refer to AT-222, "Side cover".
2. Disconnect shift solenoid valve D harness connector.
3. Check resistance between terminal 1 and ground.

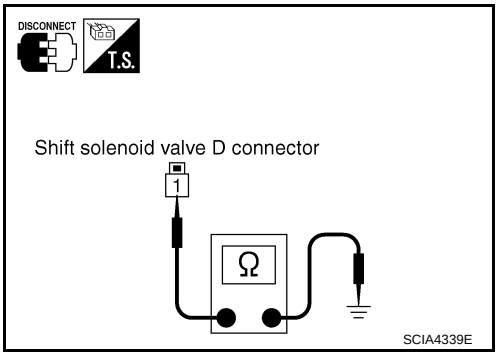

Connector	Terminal	Condition	Resistance (Approx.)
F70	1 - Ground	Temperature: 20°C (68°F)	11 - 16 Ω

OK or NG

OK >> GO TO 6.
NG >> Replace the control valve assembly. Refer to AT-222, "Control Valve Assembly".

6. CHECK HARNESS BETWEEN TERMINAL CORD ASSEMBLY AND SHIFT SOLENOID VALVE D

Check the following.
- Open or short-circuit in the harness between terminal cord assembly and shift solenoid valve D.

OK or NG

OK >> GO TO 7.
NG >> Repair or replace transmission wire. Refer to AT-222, "Transmission wire".

7. CHECK DTC

Perform “DTC Confirmation Procedure”. Refer to AT-155, "DTC Confirmation Procedure".

OK or NG

OK >> **INSPECTION END**
NG >> GO TO 8.

8. CHECK TCM

1. Check TCM input/output signal. Refer to AT-66, "TCM Input/Output Signal Reference Value".
2. If NG, recheck TCM pin terminals for damage or loose connection with harness connector.

OK or NG

OK >> **INSPECTION END**
NG >> Repair or replace damaged parts.

Component Inspection

INFOID:0000000001718011

SHIFT SOLENOID VALVE D

1. Remove side cover. Refer to AT-222, "Side cover".
2. Disconnect shift solenoid valve D harness connector.
3. Check resistance between terminal 1 and ground.

Connector	Terminal	Condition	Resistance (Approx.)
F70	1 - Ground	Temperature: 20°C (68°F)	11 - 16 Ω

4. If NG, replace the control valve assembly. Refer to AT-222, "Control Valve Assembly".

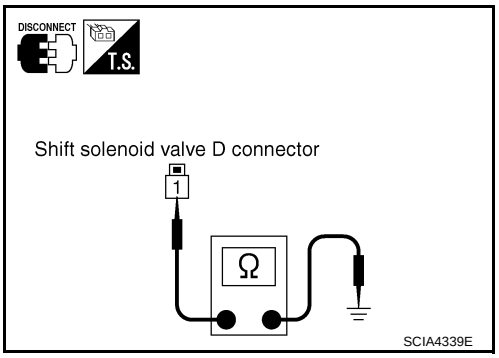

DTC P0770 SHIFT SOLENOID VALVE E

Description

INFOID:0000000001718012

- Shift solenoid valves are installed directly in control valve body. The shift solenoid valves operates of ON and OFF by the control signal from TCM. Combinations of 5 shift solenoid valves, A, B, C, D and E, shifts gear positions.
- The shift solenoid valve E is a normally closed, ON-OFF type solenoid.

Gear position	D_1, L_1	D_2, L_2	D_3, L_3	D_4	D_5	Reverse
Shift solenoid valve E	OFF (Closed)	OFF (Closed)	OFF (Closed)	OFF (Closed)	OFF (Closed)	ON (Open)

NOTE:

The condition of shift solenoid valve E is ON (Open) with shifting $D_2 \Leftrightarrow D_3$ ($L_2 \Leftrightarrow L_3$) and $D_3 \Leftrightarrow D_4$.

On Board Diagnosis Logic

INFOID:0000000001718013

- This is an OBD-II self-diagnostic item.
- Diagnostic trouble code “SHIFT SOL E” with CONSULT-III or P0770 without CONSULT-III is detected under the following conditions.
- When normal voltage is not applied to solenoid due to open, short, and so on.
- When TCM detects as irregular by comparing target value with monitor value.

Possible Cause

INFOID:0000000001718014

- Harness or connectors
  (The solenoid circuit is open or shorted.)
- Shift solenoid valve E

DTC Confirmation Procedure

INFOID:0000000001718015

CAUTION:
- **Always drive vehicle at a safe speed.**
- **Be careful not to rev engine into the red zone on the tachometer.**

NOTE:
If “DTC Confirmation Procedure” has been previously performed, always turn ignition switch “OFF” and wait at least 10 seconds before performing the next test.
After the repair, perform the following procedure to confirm the malfunction is eliminated.

WITH CONSULT-III

1. Turn ignition switch “ON”. (Do not start engine.)
2. Select “DATA MONITOR” mode for “TRANSMISSION” with CONSULT-III.
3. Start engine.
4. Move selector lever between “N” and “R”.
   SLCT LVR POSI: “N”⇔“R” position
5. If DTC is detected, go to AT-162, "Diagnosis Procedure".

WITH GST

Follow the procedure “With CONSULT-III”.

Wiring Diagram - AT - SSV/E

INFOID:0000000001718016

AT-SSV/E-01

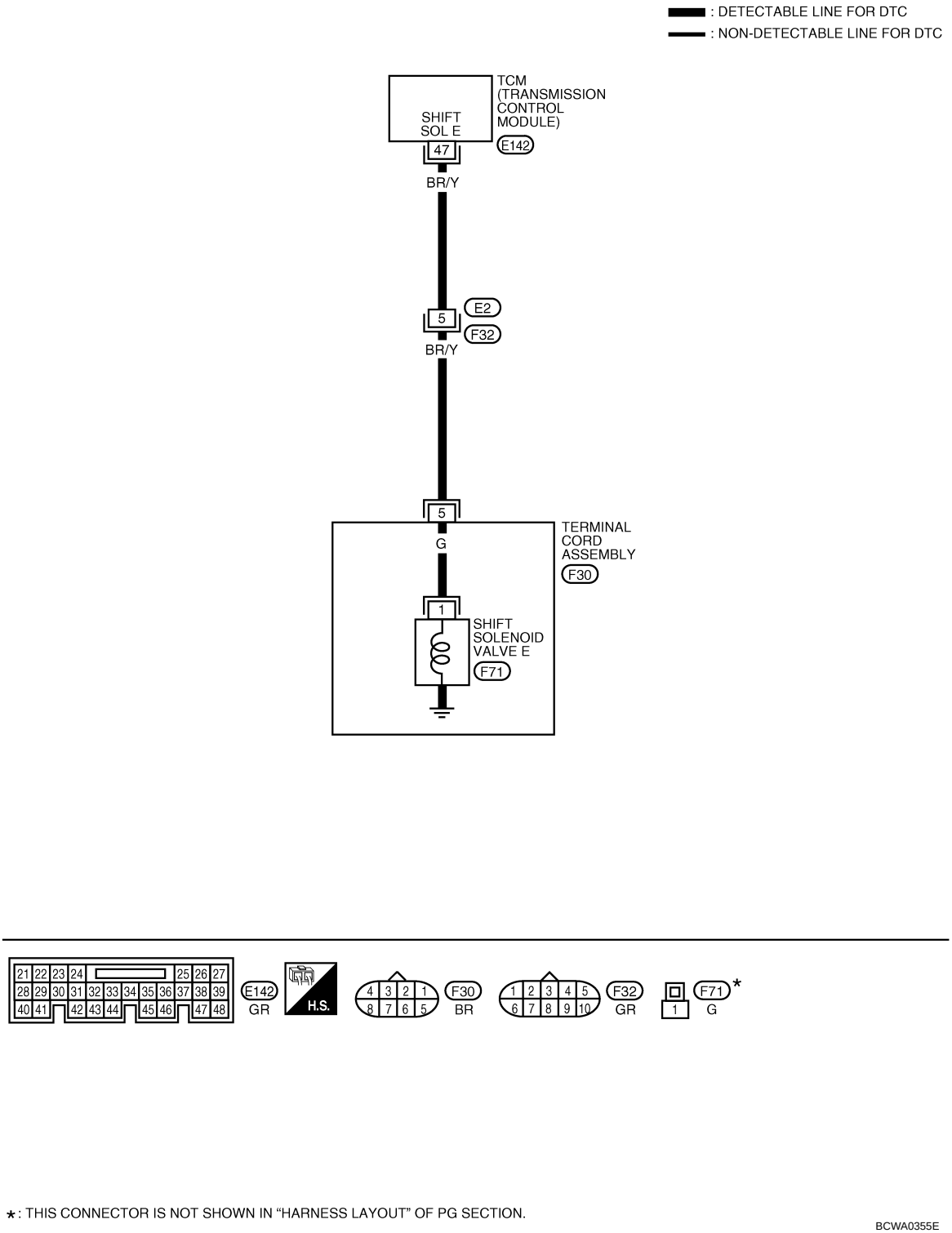

TCM Input/Output Signal Reference Values. Refer to AT-66, "TCM Input/Output Signal Reference Value".

Diagnosis Procedure

INFOID:0000000001718017

1. CHECK SHIFT SOLENOID VALVE E SIGNAL

With CONSULT-III

1. Start engine.
2. Select “DATA MONITOR” mode for “TRANSMISSION” with CONSULT-III.
3. Drive vehicle and read out the value of “SFT SOL E OUT” and “SFT SOL E MON”.

Monitor item	Condition	Indication
• SFT SOL E OUT • SFT SOL E MON	When shift solenoid valve E operates. (When driving in reverse gear.)	ON
	When shift solenoid valve E does not operate.	OFF

Without CONSULT-III

1. Drive vehicle.
2. Check voltage between TCM connector terminal and ground.

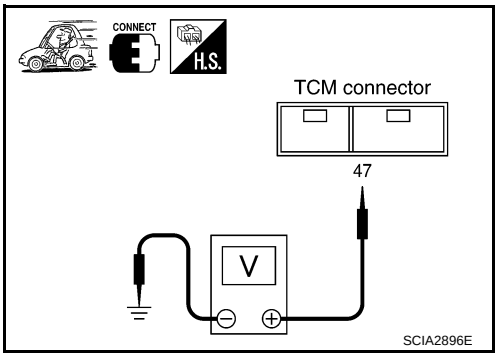

Connector	Terminal	Condition	Voltage (Approx.)
E142	47 - Ground	When shift solenoid valve E operates. (When driving in reverse gear.)	Battery voltage
		When shift solenoid valve E does not operate.	0V

OK or NG

OK >> GO TO 7.
NG >> GO TO 2.

2. CHECK SHIFT SOLENOID VALVE E CIRCUIT

1. Turn ignition switch “OFF”.
2. Disconnect the TCM connector.
3. Check resistance between TCM connector terminal 47 and ground.

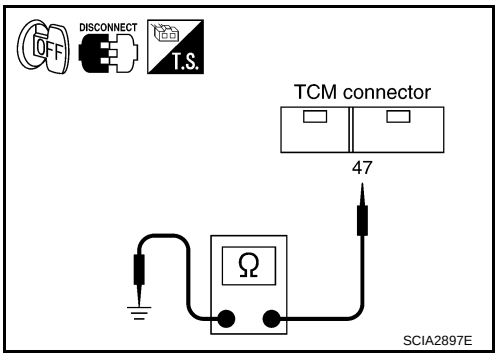

Connector	Terminal	Condition	Resistance (Approx.)
E142	47 - Ground	Temperature: 20°C (68°F)	11 - 16 Ω

OK or NG

OK >> GO TO 7.
NG >> GO TO 3.

3. CHECK TERMINAL CORD ASSEMBLY WITH SHIFT SOLENOID VALVE E

1. Turn ignition switch “OFF”.
2. Disconnect terminal cord assembly harness connector.

3. Check resistance between terminal 5 and ground.

Connector	Terminal	Condition	Resistance (Approx.)
F30	5 - Ground	Temperature: 20°C (68°F)	11 - 16 Ω

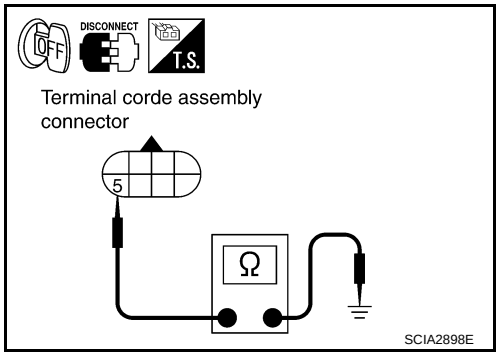

OK or NG

OK >> GO TO 4.
NG >> GO TO 5.

4. CHECK HARNESS BETWEEN TCM AND TERMINAL CORD ASSEMBLY

Check the following.
- Open or short-circuit in the harness between TCM and terminal cord assembly.

OK or NG

OK >> GO TO 7.
NG >> Repair or replace damaged parts.

5. CHECK SHIFT SOLENOID VALVE E

1. Remove side cover. Refer to AT-222, "Side cover".
2. Disconnect shift solenoid valve E harness connector.
3. Check resistance between terminal 1 and ground.

Connector	Terminal	Condition	Resistance (Approx.)
F71	1 - Ground	Temperature: 20°C (68°F)	11 - 16 Ω

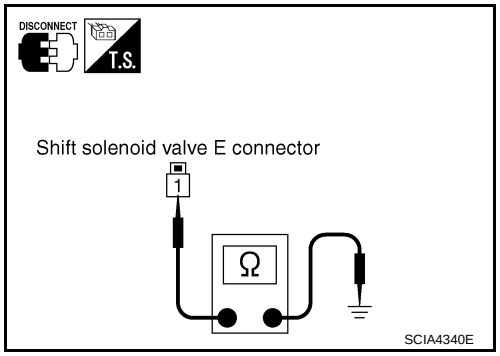

OK or NG

OK >> GO TO 6.
NG >> Replace the control valve assembly. Refer to AT-222, "Control Valve Assembly".

6. CHECK HARNESS BETWEEN TERMINAL CORD ASSEMBLY AND SHIFT SOLENOID VALVE E

Check the following.
- Open or short-circuit in the harness between terminal cord assembly and shift solenoid valve E.

OK or NG

OK >> GO TO 7.
NG >> Repair or replace transmission wire. Refer to AT-222, "Transmission wire".

7. CHECK DTC

Perform “DTC Confirmation Procedure”. Refer to AT-160, "DTC Confirmation Procedure".

OK or NG

OK >> **INSPECTION END**
NG >> GO TO 8.

8. CHECK TCM

1. Check TCM input/output signal. Refer to AT-66, "TCM Input/Output Signal Reference Value".
2. If NG, recheck TCM pin terminals for damage or loose connection with harness connector.

OK or NG

OK >> **INSPECTION END**
NG >> Repair or replace damaged parts.

Component Inspection

INFOID:0000000001718018

SHIFT SOLENOID VALVE E

1. Remove side cover. Refer to AT-222, "Side cover".
2. Disconnect shift solenoid valve E harness connector.
3. Check resistance between terminal 1 and ground.

Connector	Terminal	Condition	Resistance (Approx.)
F71	1 - Ground	Temperature: 20°C (68°F)	11 - 16 Ω

4. If NG, replace the control valve assembly. Refer to AT-222, "Control Valve Assembly".

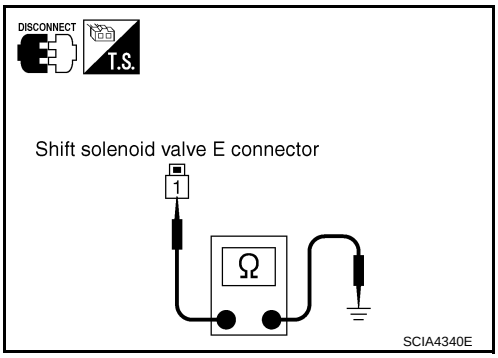

DTC P0775 PRESSURE CONTROL SOLENOID VALVE B (SHIFT PRESSURE)

Description

INFOID:0000000001718019

- The pressure control solenoid valve B is normally high, 3-port linear pressure control solenoid.
- The pressure control solenoid valve B controls linear shift pressure by control signal from TCM and controls 2nd coast brake directly under 2nd, 3rd, 4th and direct clutch directly under 5th and reverse.

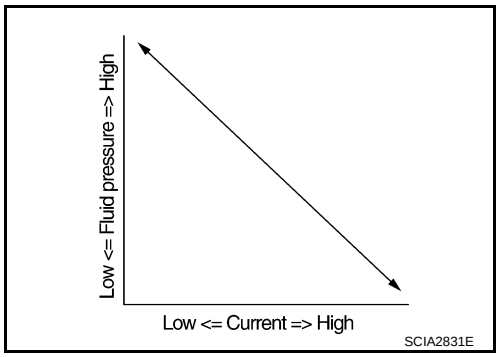

On Board Diagnosis Logic

INFOID:0000000001718020

- This is an OBD-II self-diagnostic item.
- Diagnostic trouble code “PC SOL B(SFT/PRS)” with CONSULT-III or P0775 without CONSULT-III is detected under the following conditions.
- When normal voltage is not applied to solenoid due to open, short, and so on.
- When TCM detects as irregular by comparing target value with monitor value.

Possible Cause

INFOID:0000000001718021

- Harness or connectors
  (The solenoid circuit is open or shorted.)
- Pressure control solenoid valve B

DTC Confirmation Procedure

INFOID:0000000001718022

NOTE:
If “DTC Confirmation Procedure” has been previously performed, always turn ignition switch “OFF” and wait at least 10 seconds before performing the next test.
After the repair, perform the following procedure to confirm the malfunction is eliminated.

WITH CONSULT-III

1. Turn ignition switch “ON”. (Do not start engine.)
2. Select “DATA MONITOR” mode for “TRANSMISSION” with CONSULT-III.
3. Start engine.
4. Run engine for at least 13 consecutive seconds at idle speed.
5. If DTC is detected, go to AT-167, "Diagnosis Procedure".

WITH GST

Follow the procedure “With CONSULT-III”.

Wiring Diagram - AT - PC/B

INFOID:0000000001718023

AT-PC/B-01

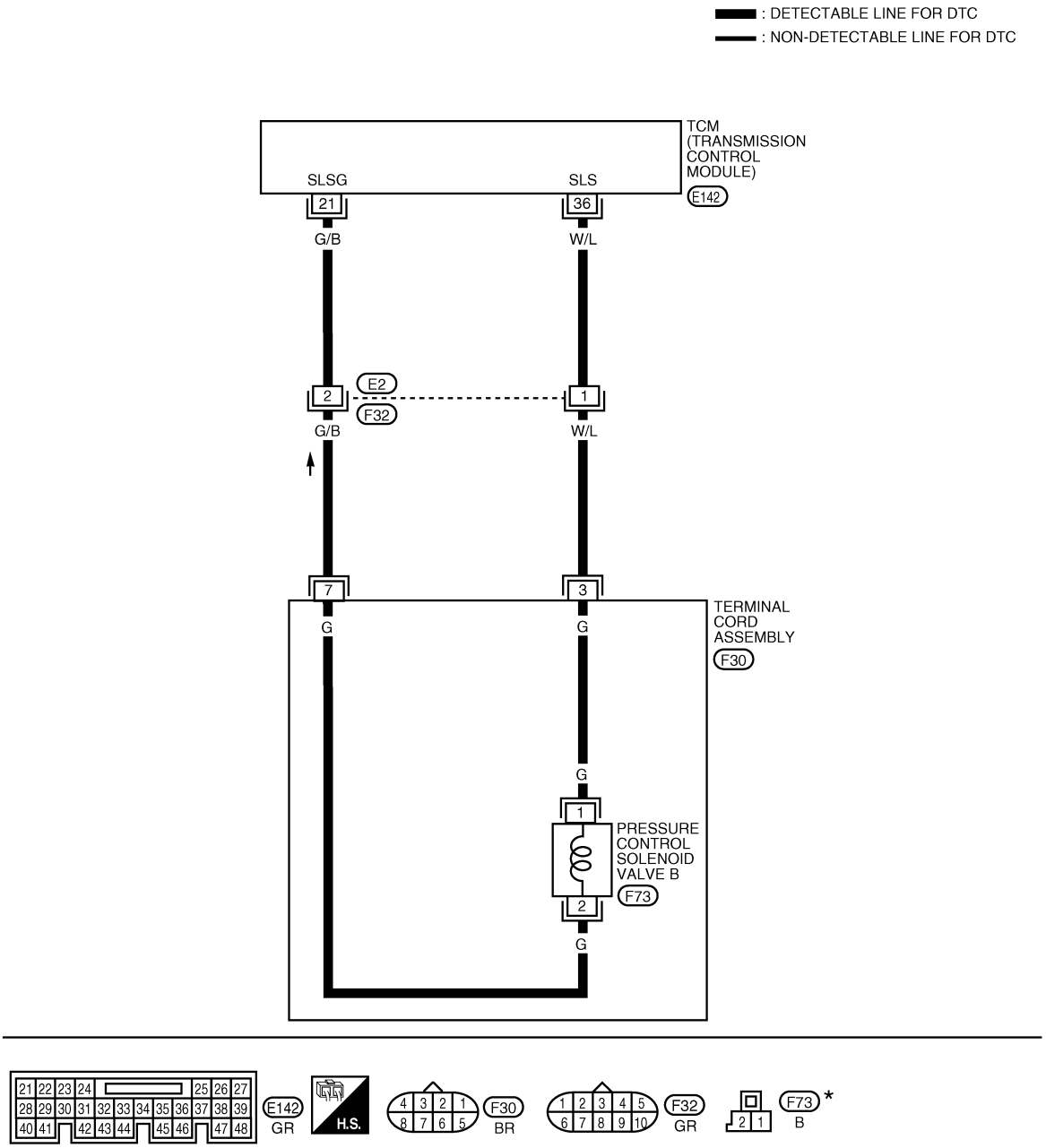

*: THIS CONNECTOR IS NOT SHOWN IN “HARNESS LAYOUT” OF PG SECTION.

BCWA0356E

TCM Input/Output Signal Reference Values. Refer to AT-66, "TCM Input/Output Signal Reference Value".

Diagnosis Procedure

INFOID:0000000001718024

1. CHECK PRESSURE CONTROL SOLENOID VALVE B SIGNAL

With CONSULT-III

1. After warming up the engine and transaxle, turn ignition switch “OFF”.
2. Turn ignition switch “ON”. (Do not start engine.)
3. Select “DATA MONITOR” mode for “TRANSMISSION” with CONSULT-III.
4. Read out the value of “PC SOL B OUT” and “PC SOL B MON”.

Monitor item	Condition	Display value (Approx.)
• PC SOL B OUT • PC SOL B MON	Selector lever: Manual shift gate position	1.00 A
	Other than the above.	0.30 A

Without CONSULT-III

1. Start the engine.
2. Check pulse between TCM connector terminals 21 and 36.

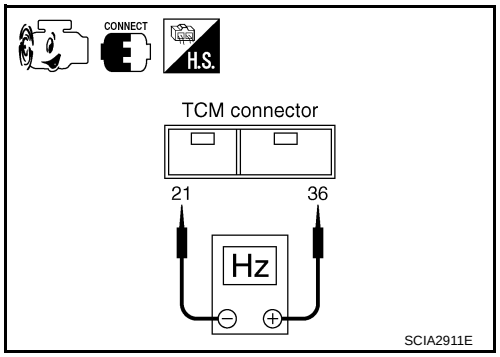

Connector	Terminal	Condition	Data (Approx.)
E142	36 - 21 (Ground)	When engine is running with idle speed and setting selector lever to “P” position.	300 Hz

OK or NG

OK >> GO TO 7.
NG >> GO TO 2.

2. CHECK PRESSURE CONTROL SOLENOID VALVE B CIRCUIT

1. Turn ignition switch “OFF”.
2. Disconnect the TCM connector.
3. Check resistance between TCM connector terminals 21 and 36.

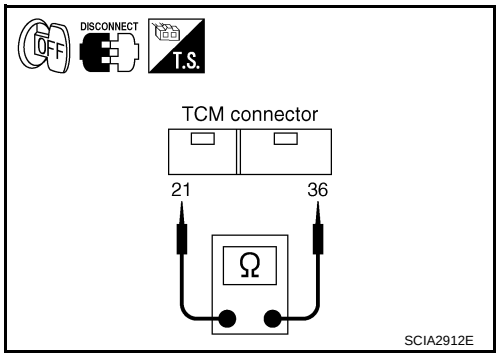

Connector	Terminal	Condition	Resistance (Approx.)
E142	36 - 21 (Ground)	Temperature: 20°C (68°F)	5.0 - 5.6 Ω

OK or NG

OK >> GO TO 7.
NG >> GO TO 3.

3. CHECK TERMINAL CORD ASSEMBLY WITH PRESSURE CONTROL SOLENOID VALVE B

1. Turn ignition switch “OFF”.
2. Disconnect terminal cord assembly harness connector.
3. Check resistance between terminals 3 and 7.

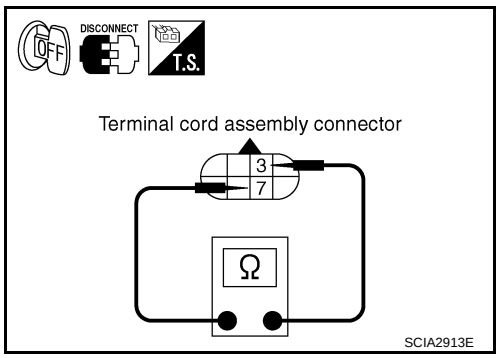

Connector	Terminal	Condition	Resistance (Approx.)
F30	3 - 7	Temperature: 20°C (68°F)	5.0 - 5.6 Ω

OK or NG

OK >> GO TO 4.
NG >> GO TO 5.

4. CHECK HARNESS BETWEEN TCM AND TERMINAL CORD ASSEMBLY

Check the following.
- Open or short-circuit in the harness between TCM and terminal cord assembly.

OK or NG

OK >> GO TO 7.
NG >> Repair or replace damaged parts.

5. CHECK PRESSURE CONTROL SOLENOID VALVE B

1. Remove side cover. Refer to AT-222, "Side cover".
2. Disconnect pressure control solenoid valve B harness connector.
3. Check resistance between terminals 1 and 2.

Connector	Terminal	Condition	Resistance (Approx.)
F73	1 - 2	Temperature: 20°C (68°F)	5.0 - 5.6 Ω

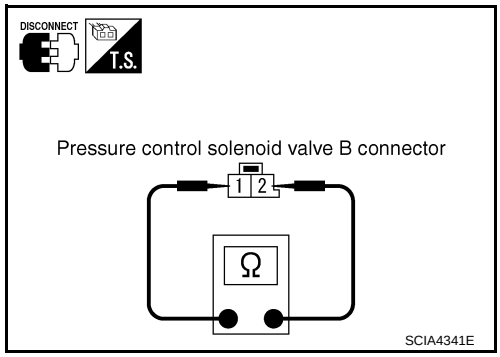

OK or NG

OK >> GO TO 6.
NG >> Replace the control valve assembly. Refer to AT-222, "Control Valve Assembly".

6. CHECK HARNESS BETWEEN TERMINAL CORD ASSEMBLY AND PRESSURE CONTROL SOLENOID VALVE B

Check the following.
- Open or short-circuit in the harness between terminal cord assembly and pressure control solenoid valve B.

OK or NG

OK >> GO TO 7.
NG >> Repair or replace transmission wire. Refer to AT-222, "Transmission wire".

7. CHECK DTC

Perform “DTC Confirmation Procedure”. Refer to AT-165, "DTC Confirmation Procedure".

OK or NG

OK >> **INSPECTION END**
NG >> GO TO 8.

8. CHECK TCM

1. Check TCM input/output signal. Refer to AT-66, "TCM Input/Output Signal Reference Value".
2. If NG, recheck TCM pin terminals for damage or loose connection with harness connector.

OK or NG

OK >> **INSPECTION END**
NG >> Repair or replace damaged parts.

Component Inspection

INFOID:0000000001718025

PRESSURE CONTROL SOLENOID VALVE B

1. Remove side cover. Refer to AT-222, "Side cover".
2. Disconnect pressure control solenoid valve B harness connector.

3. Check resistance between terminals 1 and 2.

Connector	Terminal	Condition	Resistance (Approx.)
F73	1 - 2	Temperature: 20°C (68°F)	5.0 - 5.6 Ω

4. If NG, replace the control valve assembly. Refer to AT-222, "Control Valve Assembly".

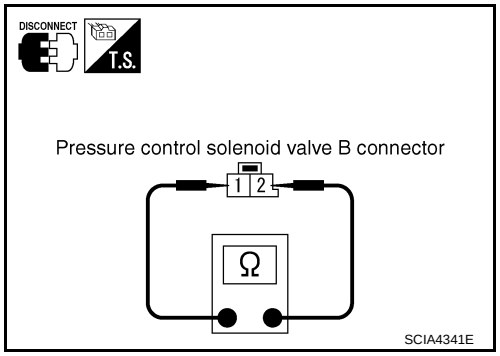

DTC P0780 SHIFT

Description

INFOID:0000000001718026

- This malfunction will not be detected while the O/D OFF indicator lamp is indicating another self-diagnosis malfunction.
- This malfunction is detected when the A/T does not shift as instructed by the TCM. This is not caused by electrical malfunction (circuits open or shorted) but by mechanical malfunction such as control valve sticking, improper solenoid valve operation, etc.

On Board Diagnosis Logic

INFOID:0000000001718027

- This is an OBD-II self-diagnostic item.
- Diagnostic trouble code “SHIFT” with CONSULT-III or P0780 without CONSULT-III is detected under the following conditions.
- When no rotation change occurs between input (turbine revolution sensor) and output (revolution sensor) and shifting time is long.
- When shifting ends immediately.
- When engine revs up unusually during shifting.

Possible Cause

INFOID:0000000001718028

- Shift solenoid valve D
  (Off error.)
- Shift solenoid valve E
  (Off error.)
- Pressure control solenoid valve A
  (On/Off error.)
- Pressure control solenoid valve B
  (On/Off error.)
- Pressure control solenoid valve C
  (On/Off error.)
- Hydraulic control circuit

DTC Confirmation Procedure

INFOID:0000000001718029

CAUTION:
- **Always drive vehicle at a safe speed.**
- **Be careful not to rev engine into the red zone on the tachometer.**

NOTE:
If “DTC Confirmation Procedure” has been previously performed, always turn ignition switch “OFF” and wait at least 10 seconds before performing the next test.
After the repair, perform the following procedure to confirm the malfunction is eliminated.

WITH CONSULT-III

1. Start engine and select “DATA MONITOR” mode for “TRANSMISSION” with CONSULT-III.
2. Make sure that ATF temperature is within the range below.
   FLUID TEMP: More than 60°C (140°F)
   If out of range, drive the vehicle to warm up the fluid.
3. Drive vehicle and allow the following conditions.
   SLCT LVR POSI: “D” position
   GEAR: 1st ⇒ 2nd ⇒ 3rd ⇒ 4th ⇒ 5th position
   (Vehicle speed: Refer to AT-292, "Shift Schedule".)
4. If DTC is detected, go to AT-173, "Diagnosis Procedure".

WITH GST

Follow the procedure “With CONSULT-III”.

Wiring Diagram - AT - SFTFNC

INFOID:0000000001718030

AT-SFTFNC-01

: DETECTABLE LINE FOR DTC
: NON-DETECTABLE LINE FOR DTC

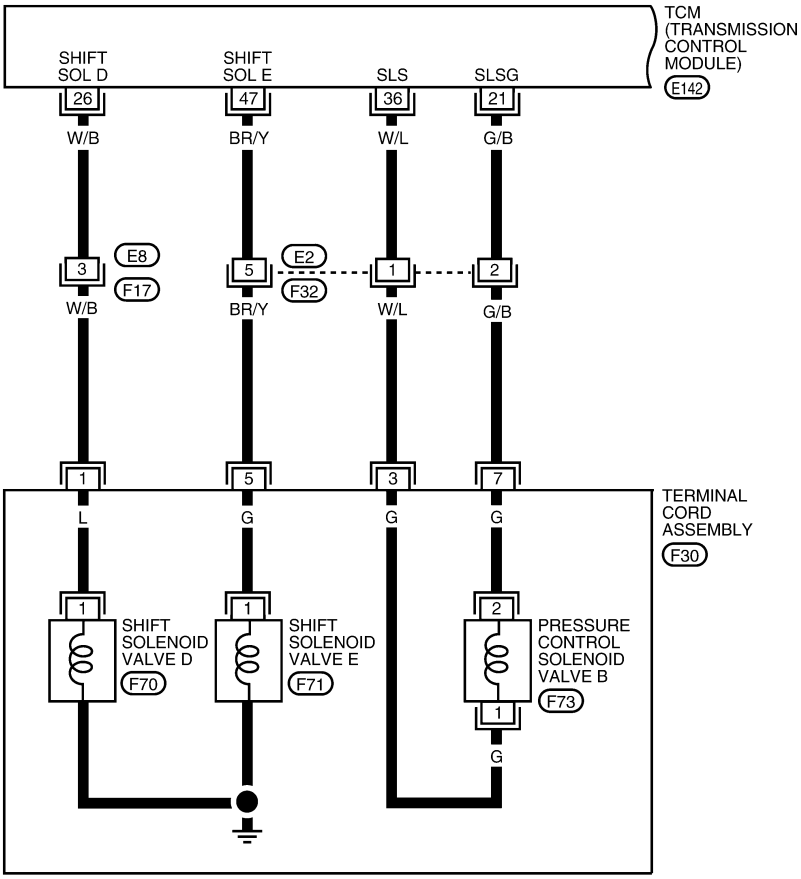

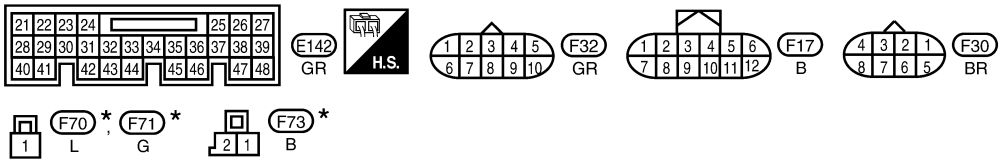

*: THIS CONNECTOR IS NOT SHOWN IN “HARNESS LAYOUT” OF PG SECTION.

BCWA0601E

AT-SFTFNC-02

: DETECTABLE LINE FOR DTC
: NON-DETECTABLE LINE FOR DTC

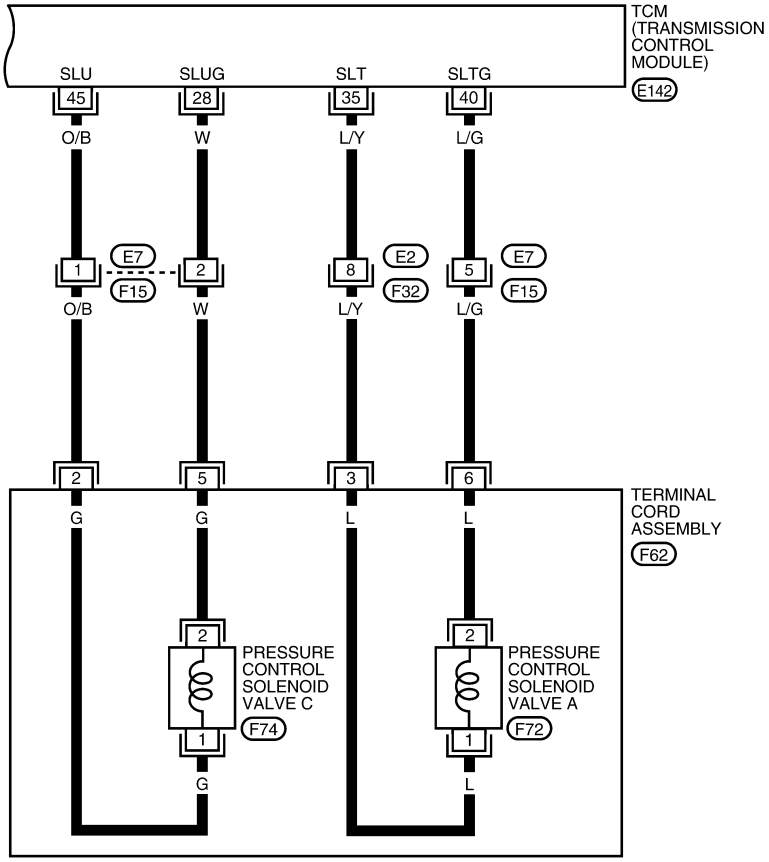

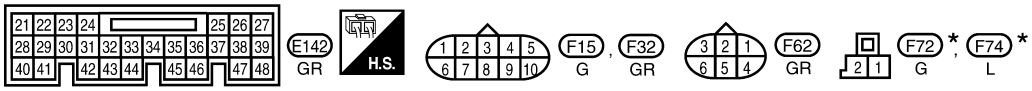

*: THIS CONNECTOR IS NOT SHOWN IN “HARNESS LAYOUT” OF PG SECTION.

BCWA0602E

TCM Input/Output Signal Reference Values. Refer to AT-66, "TCM Input/Output Signal Reference Value".

Diagnosis Procedure

INFOID:0000000001718031

1. CHECK EACH SHIFT SOLENOID VALVE CIRCUIT

Perform “Diagnostic Procedure” for the following DTCs.
- “DTC P0765 SHIFT SOLENOID VALVE D” (Refer to AT-157, "Diagnosis Procedure".)
- “DTC P0770 SHIFT SOLENOID VALVE E” (Refer to AT-162, "Diagnosis Procedure".)

OK or NG

OK >> GO TO 2.
NG >> Repair or replace damaged parts.

2. CHECK EACH PRESSURE CONTROL SOLENOID VALVE CIRCUIT

Perform “Diagnostic Procedure” for the following DTCs.
- “DTC P0745 PRESSURE CONTROL SOLENOID VALVE A” (Refer to AT-132, "Diagnosis Procedure".)
- “DTC P0775 PRESSURE CONTROL SOLENOID VALVE B” (Refer to AT-167, "Diagnosis Procedure".)
- “DTC P0795 PRESSURE CONTROL SOLENOID VALVE C” (Refer to AT-176, "Diagnosis Procedure".)

OK or NG

OK >> GO TO 3.
NG >> Repair or replace damaged parts.

3. CHECK DTC

Perform “DTC Confirmation Procedure”. Refer to AT-170, "DTC Confirmation Procedure".

OK or NG

OK >> **INSPECTION END**
NG >> Replace transmission wire or control valve assembly. Refer to AT-222, "Transmission wire" or AT-222, "Control Valve Assembly".

DTC P0795 PRESSURE CONTROL SOLENOID VALVE C (TCC AND SHIFT PRESSURE)

Description

INFOID:0000000001718032

- The pressure control solenoid valve C is normally low, 3-port linear pressure control solenoid.
- The pressure control solenoid valve C is activated to control the apply and release of the 2nd brake and 1st and reverse brake, and torque converter clutch.
- Lock-up operation, however, is prohibited when A/T fluid temperature is too low.
- When the accelerator pedal is depressed (less than 1/8) in lock-up condition, the engine speed should not change abruptly. If there is a big jump in engine speed, there is no lock-up.

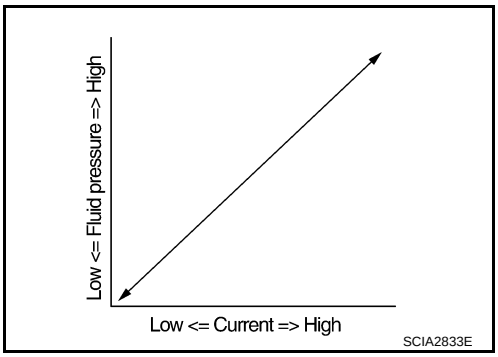

On Board Diagnosis Logic

INFOID:0000000001718033

- This is an OBD-II self-diagnostic item.
- Diagnostic trouble code “PC SOL C(TCC&SFT)” with CONSULT-III or P0795 without CONSULT-III is detected under the following conditions.

- When normal voltage is not applied to solenoid due to open, short, and so on.
- When TCM detects as irregular by comparing target value with monitor value.

Possible Cause

INFOID:0000000001718034

- Harness or connectors
  (The solenoid circuit is open or shorted.)
- Pressure control solenoid valve C

DTC Confirmation Procedure

INFOID:0000000001718035

NOTE:
If “DTC Confirmation Procedure” has been previously performed, always turn ignition switch “OFF” and wait at least 10 seconds before performing the next test.
After the repair, perform the following procedure to confirm the malfunction is eliminated.

WITH CONSULT-III

1. Turn ignition switch “ON”. (Do not start engine.)
2. Select “DATA MONITOR” mode for “TRANSMISSION” with CONSULT-III.
3. Start engine.
4. Run engine for at least 13 consecutive seconds at idle speed.
5. If DTC is detected, go to AT-176, "Diagnosis Procedure".

WITH GST

Follow the procedure “With CONSULT-III”.

Wiring Diagram - AT - PC/C

INFOID:0000000001718036

AT-PC/C-01

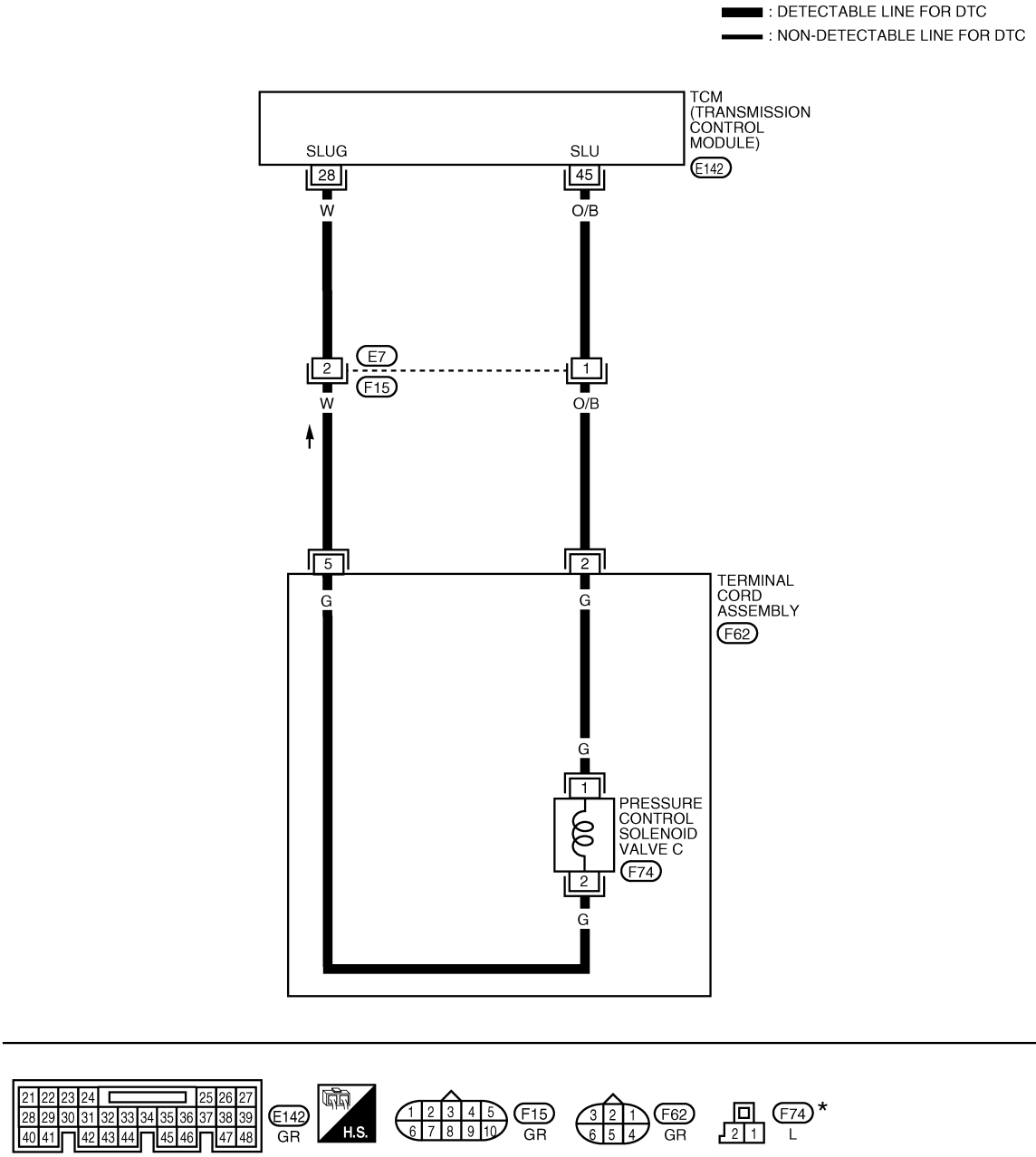

*: THIS CONNECTOR IS NOT SHOWN IN “HARNESS LAYOUT” OF PG SECTION.

BCWA0357E

TCM Input/Output Signal Reference Values. Refer to AT-66, "TCM Input/Output Signal Reference Value".

Diagnosis Procedure

INFOID:0000000001718037

1. CHECK PRESSURE CONTROL SOLENOID VALVE C SIGNAL

With CONSULT-III

1. After warming up the engine and transaxle, turn ignition switch “OFF”.
2. Turn ignition switch “ON”. (Do not start engine.)
3. Select “DATA MONITOR” mode for “TRANSMISSION” with CONSULT-III.
4. Read out the value of “PC SOL C OUT” and “PC SOL C MON”.

Monitor item	Condition	Display value (Approx.)
• PC SOL C OUT • PC SOL C MON	Selector lever: Manual shift gate position	1.00 A
	Other than the above.	0.20 A

Without CONSULT-III

1. Start the engine.
2. Check pulse between TCM connector terminals 28 and 45.

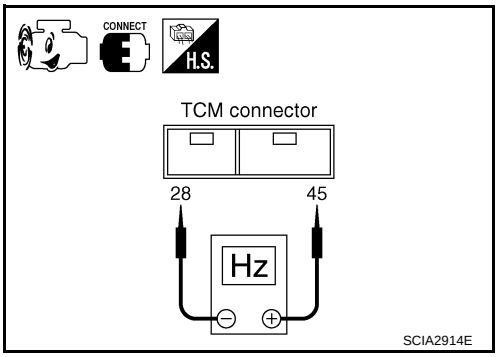

Connector	Terminal	Condition	Data (Approx.)
E142	45 - 28 (Ground)	When engine is running with idle speed and setting selector lever to “P” position.	300 Hz

OK or NG

OK >> GO TO 7.
NG >> GO TO 2.

2. CHECK PRESSURE CONTROL SOLENOID VALVE C CIRCUIT

1. Turn ignition switch “OFF”.
2. Disconnect the TCM connector.
3. Check resistance between TCM connector terminals 28 and 45.

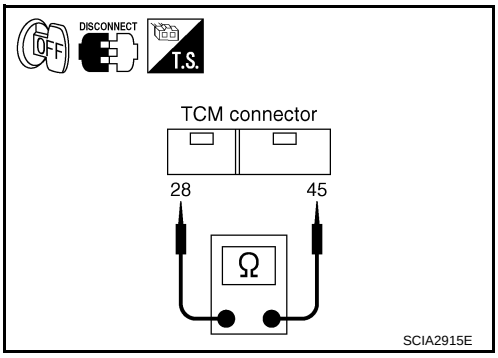

Connector	Terminal	Condition	Resistance (Approx.)
E142	45 - 28 (Ground)	Temperature: 20°C (68°F)	5.0 - 5.6 Ω

OK or NG

OK >> GO TO 7.
NG >> GO TO 3.

3. CHECK TERMINAL CORD ASSEMBLY WITH PRESSURE CONTROL SOLENOID VALVE C

1. Turn ignition switch “OFF”.
2. Disconnect terminal cord assembly harness connector.
3. Check resistance between terminals 2 and 5.

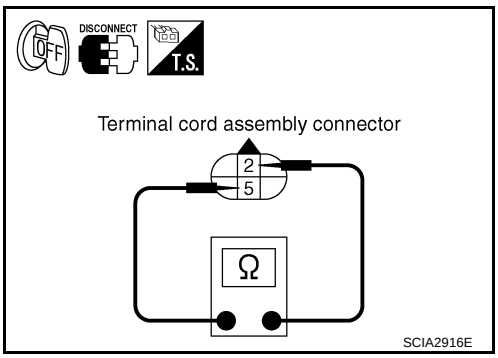

Connector	Terminal	Condition	Resistance (Approx.)
F62	2 - 5	Temperature: 20°C (68°F)	5.0 - 5.6 Ω

OK or NG

OK >> GO TO 4.
NG >> GO TO 5.

4. CHECK HARNESS BETWEEN TCM AND TERMINAL CORD ASSEMBLY

Check the following.
- Open or short-circuit in the harness between TCM and terminal cord assembly.

OK or NG

OK >> GO TO 7.
NG >> Repair or replace damaged parts.

5. CHECK PRESSURE CONTROL SOLENOID VALVE C

1. Remove side cover. Refer to AT-222, "Side cover".
2. Disconnect pressure control solenoid valve C harness connector.
3. Check resistance between terminals 1 and 2.

Connector	Terminal	Condition	Resistance (Approx.)
F74	1 - 2	Temperature: 20°C (68°F)	5.0 - 5.6 Ω

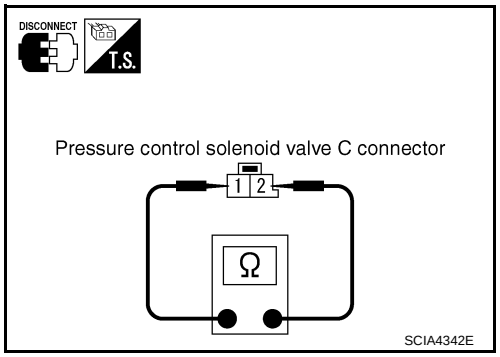

OK or NG

OK >> GO TO 6.
NG >> Replace the control valve assembly. Refer to AT-222, "Control Valve Assembly".

6. CHECK HARNESS BETWEEN TERMINAL CORD ASSEMBLY AND PRESSURE CONTROL SOLENOID VALVE C

Check the following.
- Open or short-circuit in the harness between terminal cord assembly and pressure control solenoid valve C.

OK or NG

OK >> GO TO 7.
NG >> Repair or replace transmission wire. Refer to AT-222, "Transmission wire".

7. CHECK DTC

Perform “DTC Confirmation Procedure”. Refer to AT-174, "DTC Confirmation Procedure".

OK or NG

OK >> **INSPECTION END**
NG >> GO TO 8.

8. CHECK TCM

1. Check TCM input/output signal. Refer to AT-66, "TCM Input/Output Signal Reference Value".
2. If NG, recheck TCM pin terminals for damage or loose connection with harness connector.

OK or NG

OK >> **INSPECTION END**
NG >> Repair or replace damaged parts.

Component Inspection

INFOID:0000000001718038

PRESSURE CONTROL SOLENOID VALVE C

1. Remove side cover. Refer to AT-222, "Side cover".
2. Disconnect pressure control solenoid valve C harness connector.

3. Check resistance between terminals 1 and 2.

Connector	Terminal	Condition	Resistance (Approx.)
F74	1 - 2	Temperature: 20°C (68°F)	5.0 - 5.6 Ω

4. If NG, replace the control valve assembly. Refer to AT-222, "Control Valve Assembly".

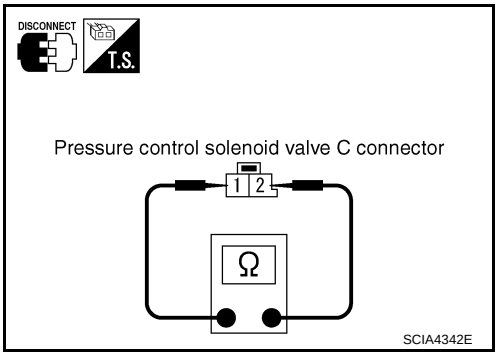

DTC P0797 PRESSURE CONTROL SOLENOID VALVE C STUCK ON

Description

INFOID:0000000001718039

- This malfunction will not be detected while the O/D OFF indicator lamp is indicating another self-diagnosis malfunction.
- This is not caused by electrical malfunction (circuits open or shorted) but by mechanical malfunction such as control valve sticking, improper solenoid valve operation, etc.
- The pressure control solenoid valve C is normally low, 3-port linear pressure control solenoid.
- The pressure control solenoid valve C is activated to control the apply and release of the 2nd brake and 1st and reverse brake, and torque converter clutch.
- Lock-up operation, however, is prohibited when A/T fluid temperature is too low.
- When the accelerator pedal is depressed (less than 1/8) in lock-up condition, the engine speed should not change abruptly. If there is a big jump in engine speed, there is no lock-up.

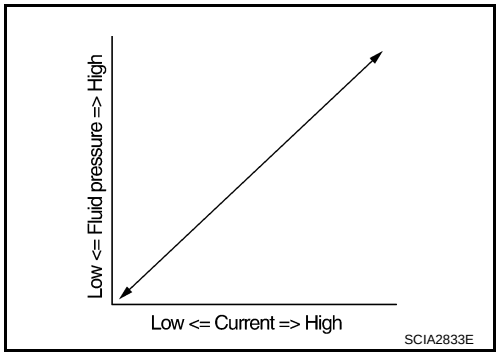

On Board Diagnosis Logic

INFOID:0000000001718040

- This is an OBD-II self-diagnostic item.
- Diagnostic trouble code “PC SOL C STC ON” with CONSULT-III or P0797 without CONSULT-III is detected when condition of pressure control solenoid valve C is different from monitor value, and relation between gear position and actual gear ratio or lock-up status is irregular.

Possible Cause

INFOID:0000000001718041

- Pressure control solenoid valve C
  (On stick.)
- Hydraulic control circuit

DTC Confirmation Procedure

INFOID:0000000001718042

NOTE:
If “DTC Confirmation Procedure” has been previously performed, always turn ignition switch “OFF” and wait at least 10 seconds before performing the next test.
After the repair, perform the following procedure to confirm the malfunction is eliminated.

WITH CONSULT-III

1. Turn ignition switch “ON”. (Do not start engine.)
2. Select “DATA MONITOR” mode for “TRANSMISSION” with CONSULT-III.
3. Start engine.
4. Run engine for at least 4 consecutive minutes at idle speed.
5. If DTC is detected, go to AT-181, "Diagnosis Procedure".

WITH GST

Follow the procedure “With CONSULT-III”.

Wiring Diagram - AT - PC/CS

INFOID:0000000001718043

AT-PC/CS-01

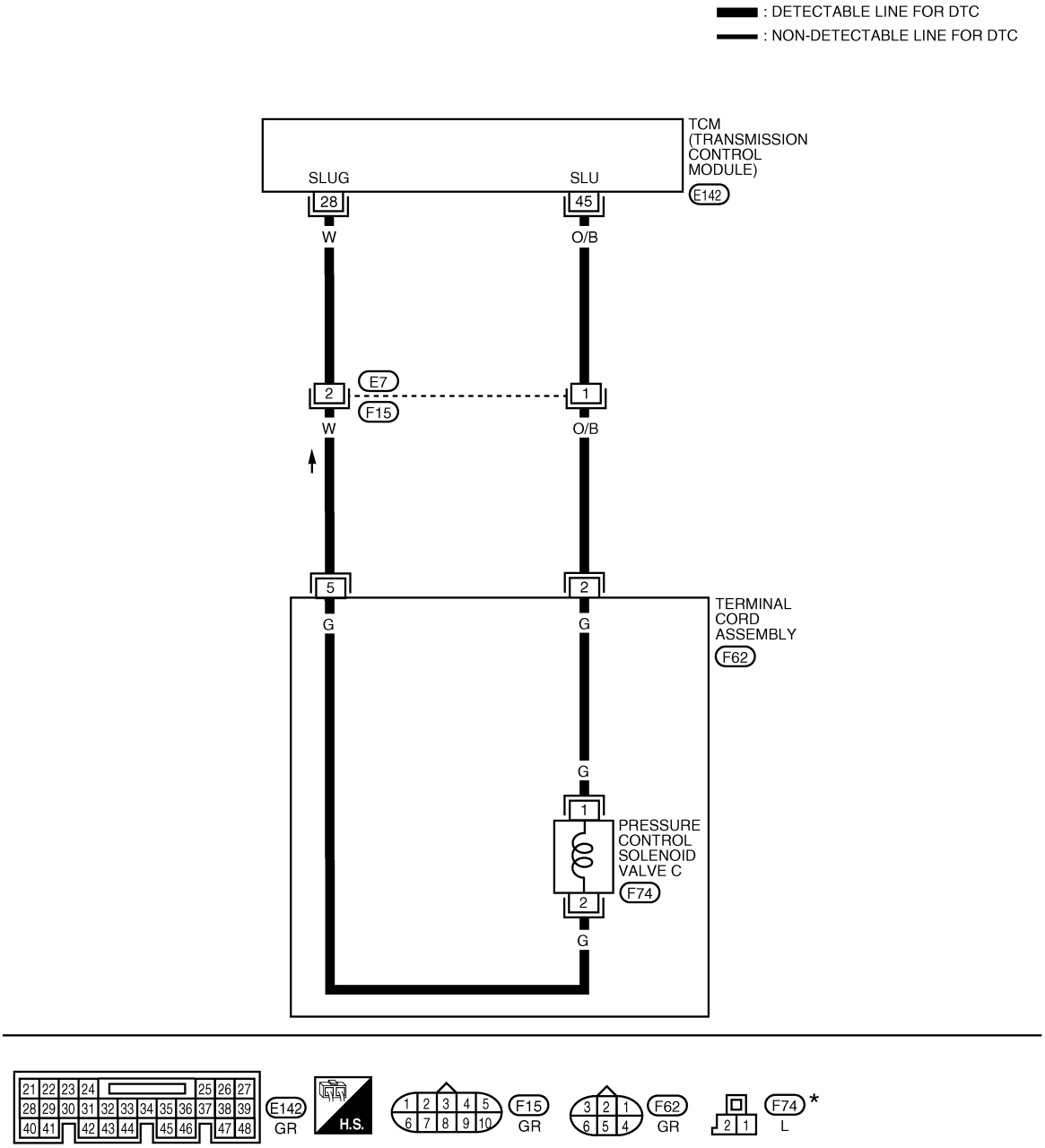

*: THIS CONNECTOR IS NOT SHOWN IN “HARNESS LAYOUT” OF PG SECTION.

BCWA0358E

TCM Input/Output Signal Reference Values. Refer to AT-66, "TCM Input/Output Signal Reference Value" .

Diagnosis Procedure

INFOID:0000000001718044

1. CHECK PRESSURE CONTROL SOLENOID VALVE C SIGNAL

With CONSULT-III

1. After warming up the engine and transaxle, turn ignition switch “OFF”.
2. Turn ignition switch “ON”. (Do not start engine.)
3. Select “DATA MONITOR” mode for “TRANSMISSION” with CONSULT-III.
4. Read out the value of “PC SOL C OUT” and “PC SOL C MON”.

Monitor item	Condition	Display value (Approx.)
• PC SOL C OUT • PC SOL C MON	Selector lever: Manual shift gate position	1.00 A
	Other than the above.	0.20 A

Without CONSULT-III

1. Start the engine.
2. Check pulse between TCM connector terminals 28 and 45.

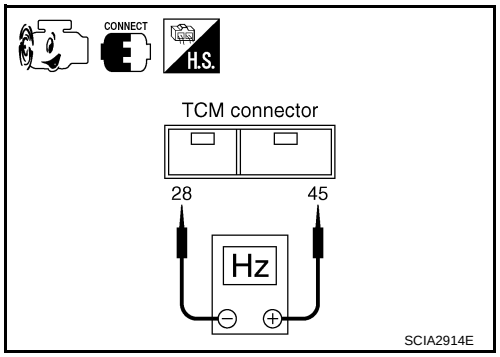

Connector	Terminal	Condition	Data (Approx.)
E142	45 - 28 (Ground)	When engine is running with idle speed and setting selector lever to “P” position.	300 Hz

OK or NG

OK >> GO TO 7.
NG >> GO TO 2.

2. CHECK PRESSURE CONTROL SOLENOID VALVE C CIRCUIT

1. Turn ignition switch “OFF”.
2. Disconnect the TCM connector.
3. Check resistance between TCM connector terminals 28 and 45.

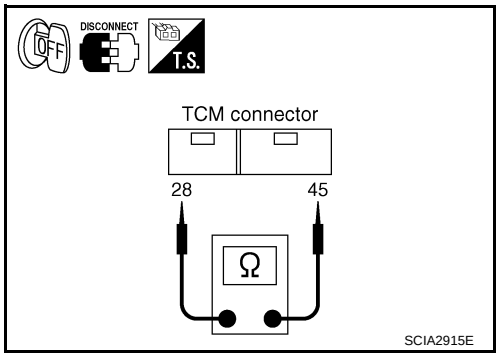

Connector	Terminal	Condition	Resistance (Approx.)
E142	45 - 28 (Ground)	Temperature: 20°C (68°F)	5.0 - 5.6 Ω

OK or NG

OK >> GO TO 7.
NG >> GO TO 3.

3. CHECK TERMINAL CORD ASSEMBLY WITH PRESSURE CONTROL SOLENOID VALVE C

1. Turn ignition switch “OFF”.
2. Disconnect terminal cord assembly harness connector.
3. Check resistance between terminals 2 and 5.

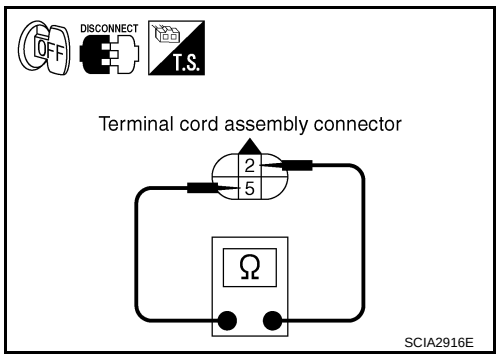

Connector	Terminal	Condition	Resistance (Approx.)
F62	2 - 5	Temperature: 20°C (68°F)	5.0 - 5.6 Ω

OK or NG

OK >> GO TO 4.
NG >> GO TO 5.

4. CHECK HARNESS BETWEEN TCM AND TERMINAL CORD ASSEMBLY

Check the following.
- Open or short-circuit in the harness between TCM and terminal cord assembly.

OK or NG

OK >> GO TO 7.
NG >> Repair or replace damaged parts.

5. CHECK PRESSURE CONTROL SOLENOID VALVE C

1. Remove side cover. Refer to AT-222, "Side cover".
2. Disconnect pressure control solenoid valve C harness connector.
3. Check resistance between terminals 1 and 2.

Connector	Terminal	Condition	Resistance (Approx.)
F74	1 - 2	Temperature: 20°C (68°F)	5.0 - 5.6 Ω

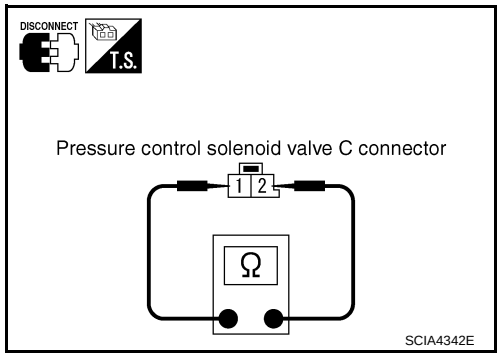

OK or NG

OK >> GO TO 6.
NG >> Replace the control valve assembly. Refer to AT-222, "Control Valve Assembly".

6. CHECK HARNESS BETWEEN TERMINAL CORD ASSEMBLY AND PRESSURE CONTROL SOLENOID VALVE C

Check the following.
- Open or short-circuit in the harness between terminal cord assembly and pressure control solenoid valve C.

OK or NG

OK >> GO TO 7.
NG >> Repair or replace transmission wire. Refer to AT-222, "Transmission wire".

7. CHECK TCM

1. Check TCM input/output signal. Refer to AT-66, "TCM Input/Output Signal Reference Value".
2. If NG, recheck TCM pin terminals for damage or loose connection with harness connector.

OK or NG

OK >> GO TO 8.
NG >> Repair or replace damaged parts.

8. CHECK DTC

Perform “DTC Confirmation Procedure”. Refer toAT-179, "DTC Confirmation Procedure".

OK or NG

OK >> **INSPECTION END**
NG >> Replace the control valve assembly. Refer to AT-222, "Control Valve Assembly".

Component Inspection

INFOID:0000000001718045

PRESSURE CONTROL SOLENOID VALVE C

1. Remove side cover. Refer to AT-222, "Side cover".
2. Disconnect pressure control solenoid valve C harness connector.

3. Check resistance between terminals 1 and 2.

Connector	Terminal	Condition	Resistance (Approx.)
F74	1 - 2	Temperature: 20°C (68°F)	5.0 - 5.6 Ω

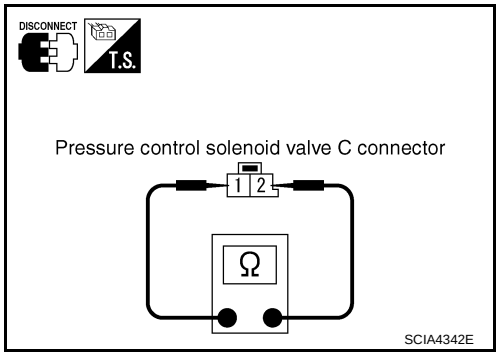

4. If NG, replace the control valve assembly. Refer to AT-222, "Control Valve Assembly".

DTC P0825 LEVER SWITCH CIRCUIT

Description

INFOID:0000000001718046

Lever switch is installed in A/T device. It sends lever switch position (ON or OFF) signals to TCM.

On Board Diagnosis Logic

INFOID:0000000001718047

- This is not an OBD-II self-diagnostic item.
- Diagnostic trouble code “GEAR LEVER SWITCH” with CONSULT-III is detected when TCM monitors lever switch signal, and judges as irregular when impossible input pattern occurs.

Possible Cause

INFOID:0000000001718048

- Harness or connectors
  (Lever switch circuit is open or shorted.)
- Lever switch (built into A/T device)

DTC Confirmation Procedure

INFOID:0000000001718049

NOTE:
If “DTC Confirmation Procedure” has been previously performed, always turn ignition switch “OFF” and wait at least 10 seconds before performing the next test.
After the repair, perform the following procedure to confirm the malfunction is eliminated.

WITH CONSULT-III

1. Turn ignition switch “ON”. (Do not start engine.)
2. Select “DATA MONITOR” mode for “TRANSMISSION” with CONSULT-III.
3. Set overdrive control switch to “OFF” position.
4. Wait for at least 30 consecutive seconds.
5. If DTC is detected, go to AT-186, "Diagnosis Procedure".

Wiring Diagram - AT - LVRSW

INFOID:0000000001718050

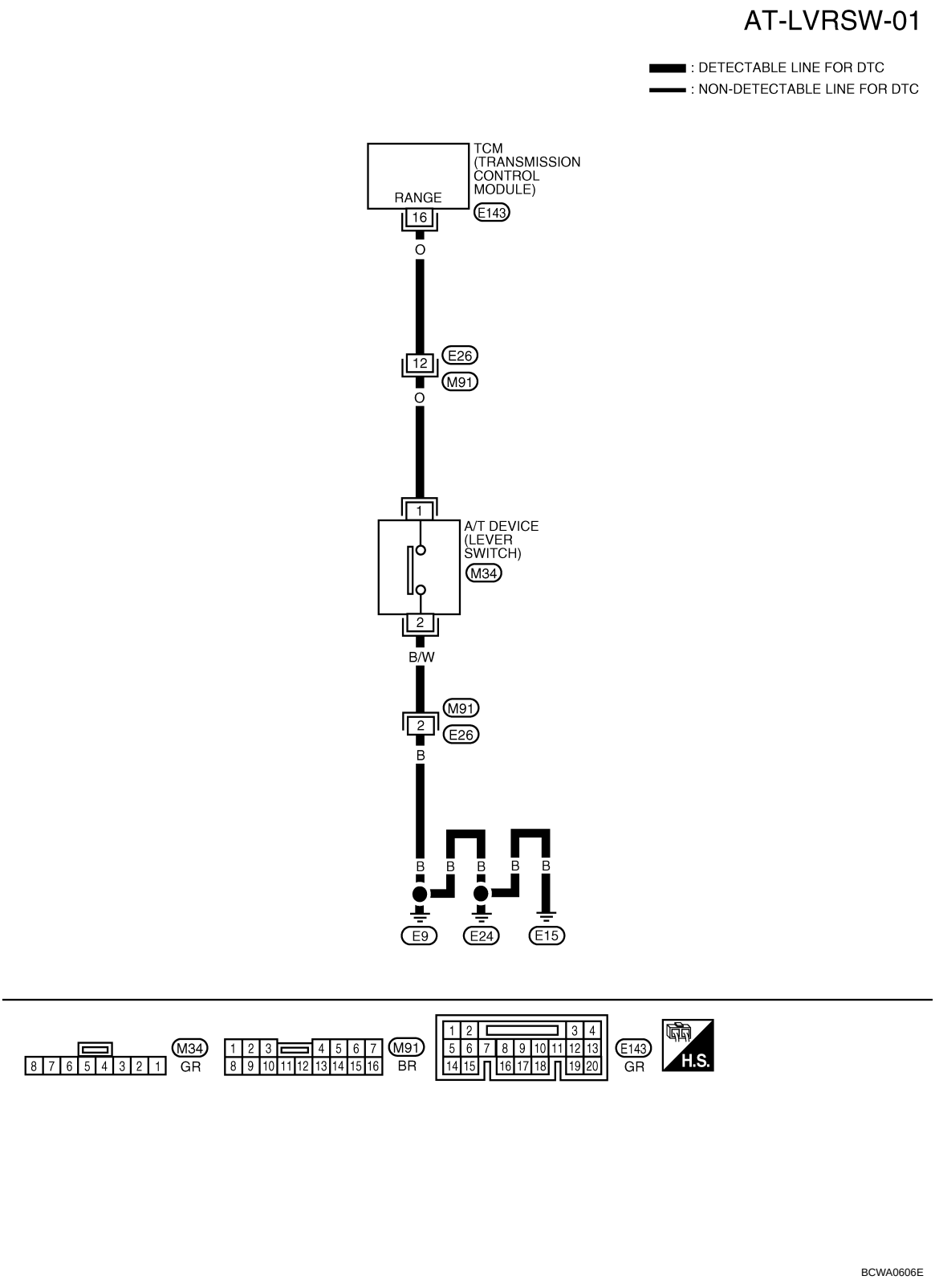

TCM Input/Output Signal Reference Values. Refer to AT-66, "TCM Input/Output Signal Reference Value" .

Diagnosis Procedure

INFOID:0000000001718051

1. CHECK LEVER SWITCH CIRCUIT

With CONSULT-III

1. Turn ignition switch “ON”. (Do not start engine.)
2. Select “DATA MONITOR” mode for “TRANSMISSION” with CONSULT-III.
3. Read out ON/OFF switching action of the “RANGE SLCT SW”.

Without CONSULT-III

1. Turn ignition switch “ON”. (Do not start engine.)
2. Check voltage between the TCM connector terminal and ground.

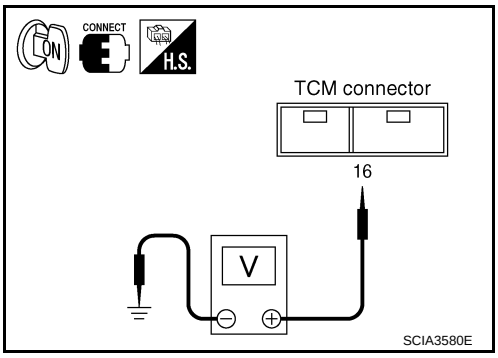

Connector No.	Terminal	Condition	Voltage (Approx.)
E143	16 - Ground	Lever switch: “ON” position	0V
		Lever switch: “OFF” position	Battery voltage

OK or NG

OK >> GO TO 4.
NG >> GO TO 2.

2. CHECK HARNESS BETWEEN TCM AND A/T DEVICE (LEVER SWITCH)

1. Turn ignition switch “OFF”.
2. Disconnect the TCM connector.
3. Check the continuity between TCM connector terminal 16 and ground.

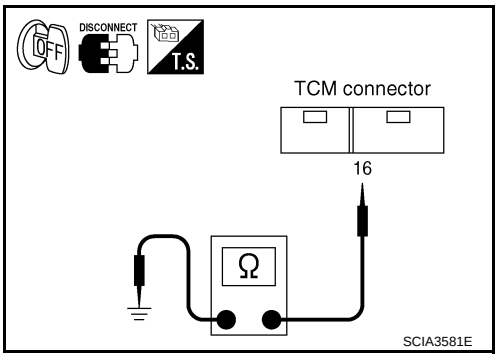

Connector No.	Terminal	Condition	Continuity
E143	16 - Ground	Lever switch: “ON” position	Yes
		Lever switch: “OFF” position	No

4. If OK, check harness for short-circuit to ground or power source.

OK or NG

OK >> GO TO 4.
NG >> GO TO 3.

3. DETECT MALFUNCTIONING ITEM

Check the following.

- Open or short-circuit in the harness between TCM and A/T device (lever switch).
- Open or short-circuit in the harness for ground of lever switch.
- Lever switch. Refer to AT-187, "Component Inspection".

OK or NG

OK >> GO TO 4.
NG >> Repair or replace damaged parts.

4. CHECK DTC

Perform “DTC Confirmation Procedure”. Refer to AT-184, "DTC Confirmation Procedure".

OK or NG

OK >> **INSPECTION END**
NG >> GO TO 5.

5. CHECK TCM

1. Check TCM input/output signal.
2. If NG, recheck TCM pin terminals for damage or loose connection with harness connector.

OK or NG

OK >> **INSPECTION END**
NG >> Repair or replace damaged parts.

Component Inspection

INFOID:0000000001718052

LEVER SWITCH

Check continuity between A/T device (lever switch) terminals 1 and 2.

Switch position	Continuity
ON	Yes
OFF	No

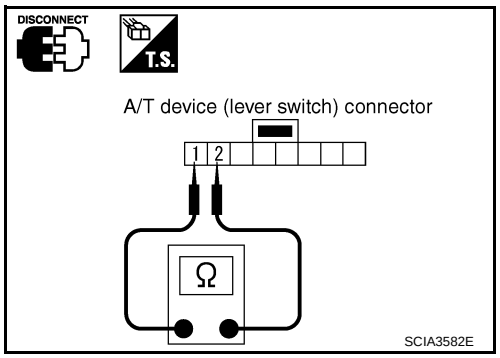

DTC P0882 TCM POWER INPUT SIGNAL

Description

INFOID:0000000001718053

When the power supply to the TCM is cut “OFF”, for example because the battery is removed, and the self-diagnostics memory function stops, malfunction is detected.

On Board Diagnosis Logic

INFOID:0000000001718054

- This is an OBD-II self-diagnostic item.
- Diagnostic trouble code “TCM POWER INPT SIG” with CONSULT-III or P0882 without CONSULT-III is detected when voltage supplied to TCM is too low.

Possible Cause

INFOID:0000000001718055

- Harness or connectors
  (Battery or ignition switch and TCM circuit is open or shorted.)
- A/T PV IGN relay

DTC Confirmation Procedure

INFOID:0000000001718056

CAUTION:
- **Always drive vehicle at a safe speed.**
- **Be careful not to rev engine into the red zone on the tachometer.**

NOTE:
If “DTC Confirmation Procedure” has been previously performed, always turn ignition switch “OFF” and wait at least 10 seconds before performing the next test.
After the repair, perform the following procedure to confirm the malfunction is eliminated.

WITH CONSULT-III

1. Turn ignition switch “ON”. (Do not start engine.)
2. Select “DATA MONITOR” mode for “TRANSMISSION” with CONSULT-III.
3. Start engine.
4. Depress accelerator pedal or drive vehicle and maintain the following condition for at least 20 consecutive seconds.
   TURBINE REV: More than 800 rpm
5. If DTC is detected, go to AT-190, "Diagnosis Procedure".

Wiring Diagram - AT - PWR/IN

INFOID:0000000001718057

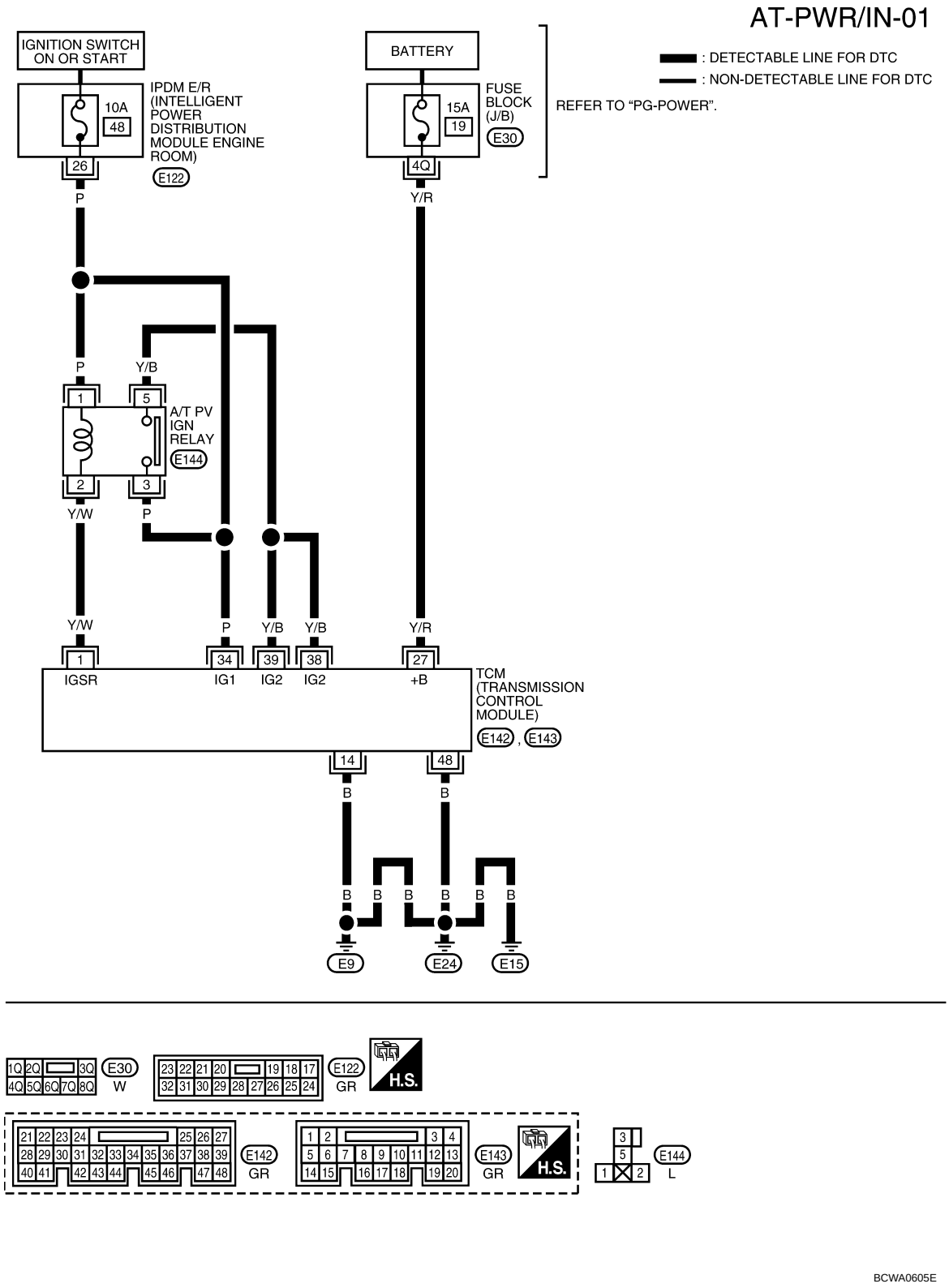

BCWA0605E

TCM Input/Output Signal Reference Values. Refer to AT-66, "TCM Input/Output Signal Reference Value" .

Diagnosis Procedure

INFOID:0000000001718058

1. CHECK TCM POWER SOURCE CIRCUIT

1. Turn ignition switch “ON”. (Do not start engine.)
2. Check voltage between TCM terminals and ground.

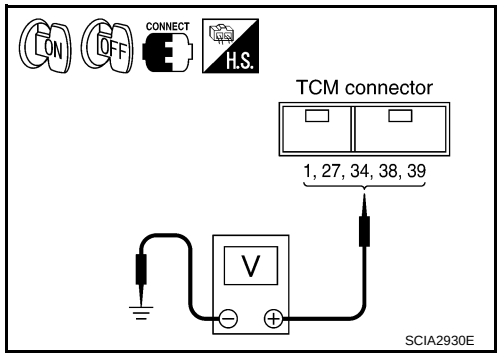

Connector	Terminal	Voltage (Approx.)
E143	1 - Ground	0 - 1.5V
E142	27 - Ground	Battery voltage
	34 - Ground	
	38 - Ground	
	39 - Ground	

3. Turn ignition switch “OFF”.
4. Check voltage between TCM terminals and ground.

Connector	Terminal	Voltage (Approx.)
E143	1 - Ground	0V
E142	27 - Ground	Battery voltage
	34 - Ground	0V
	38 - Ground	0V
	39 - Ground	0V

OK or NG

OK >> GO TO 3.
NG >> GO TO 2.

2. DETECT MALFUNCTIONING ITEM

Check the following:
- Harness for short or open between battery and TCM terminal 27
- Harness for short or open between ignition switch and TCM terminals 1, 34, 38 and 39
- 15A fuse [No. 19, located in the fuse block (J/B)]
- 10A fuse (No. 48, located in the IPDM E/R)
- Ignition switch. Refer to PG-3.
- A/T PV IGN relay. Refer to AT-191, "Component Inspection".

OK or NG

OK >> GO TO 3.
NG >> Repair or replace damaged parts.

3. CHECK TCM GROUND CIRCUIT

1. Turn ignition switch “OFF”.
2. Disconnect TCM harness connector.
3. Check continuity between TCM terminals 14, 48 and ground.

Continuity should exist.

If OK, check harness for short to ground and short to power.

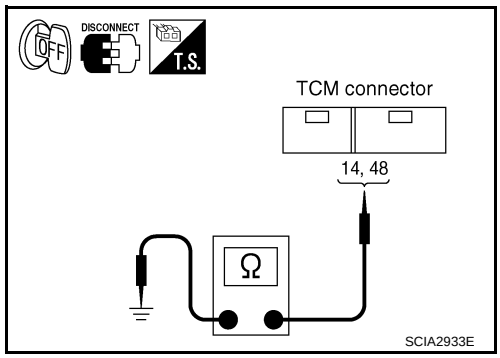

OK or NG

OK >> GO TO 4.
NG >> Repair open circuit or short to ground or short to power in harness or connectors.

4. CHECK DTC

Check again. Refer to AT-188, "DTC Confirmation Procedure".

OK or NG

OK >> **INSPECTION END**
NG >> GO TO 5.

5. CHECK TCM

1. Check TCM input/output signal.
2. If NG, recheck TCM pin terminals for damage or loose connection with harness connector.

OK or NG

OK >> **INSPECTION END**
NG >> Repair or replace damaged parts.

Component Inspection

INFOID:0000000001718059

A/T PV IGN RELAY

1. Apply 12V direct current between A/T PV IGN relay terminals 1 and 2.
2. Check continuity between relay terminals 3 and 5.

Condition	Continuity
12V direct current supply between terminals 1 and 2	Yes
OFF	No

3. If NG, replace A/T PV IGN relay.

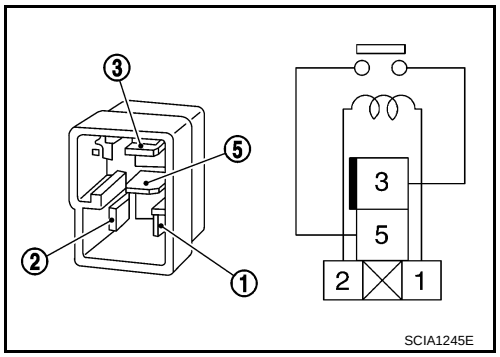

DTC P1726 ELECTRIC THROTTLE CONTROL SYSTEM

Description

INFOID:0000000001718060

This DTC is displayed with other DTCs regarding ECM. Perform the trouble diagnosis for other DTCs displayed. Refer to AT-39.
When this DTC is detected, lock-up operation and learning control are canceled.

TROUBLE DIAGNOSIS FOR SYMPTOMS

O/D OFF Indicator Lamp Does Not Come On

INFOID:0000000001718061

SYMPTOM:

O/D OFF indicator lamp does not come on for about 2 seconds when turning ignition switch to “ON”.

DIAGNOSTIC PROCEDURE

1. CHECK CAN COMMUNICATION LINE

Perform the self-diagnosis.

Is a malfunction in the CAN communication indicated in the results?

YES >> Check the CAN communication line. Refer to AT-77.
NO >> GO TO 2.

2. CHECK TCM POWER SOURCE CIRCUIT

1. Turn ignition switch “ON”. (Do not start engine.)
2. Check voltage between TCM connector terminals and ground. Refer to AT-189, "Wiring Diagram - AT - PWR/IN".

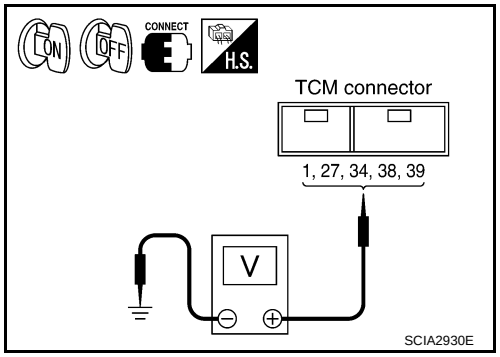

Connector	Terminal	Voltage (Approx.)
E143	1 - Ground	0 - 1.5V
E142	27 - Ground	Battery voltage
	34 - Ground	
	38 - Ground	
	39 - Ground	

3. Turn ignition switch “OFF”.
4. Check voltage between TCM connector terminals and ground. Refer to AT-189, "Wiring Diagram - AT - PWR/IN".

Connector	Terminal	Voltage (Approx.)
E143	1 - Ground	0V
E142	27 - Ground	Battery voltage
	34 - Ground	0V
	38 - Ground	0V
	39 - Ground	0V

OK or NG

OK >> GO TO 4.
NG >> GO TO 3.

3. DETECT MALFUNCTIONING ITEM

Check the following:

- Harness for short or open between battery and TCM terminal 27
- Harness for short or open between ignition switch and TCM terminals 1, 34, 38 and 39
- 15A fuse [No. 19, located in the fuse block (J/B)]
- 10A fuse (No. 48, located in the IPDM E/R)
- Ignition switch. Refer to PG-3.
- A/T PV IGN relay. Refer to AT-191, "Component Inspection".

OK or NG

OK >> GO TO 4.
NG >> Repair or replace damaged parts.

4. CHECK TCM GROUND CIRCUIT

1. Turn ignition switch “OFF”.

2. Disconnect the TCM harness connector.
3. Check continuity between TCM terminals 14, 48 and ground. Refer to AT-189, "Wiring Diagram - AT - PWR/IN".

Continuity should exist.

4. If OK, check harness for short-circuit to ground or the power source.

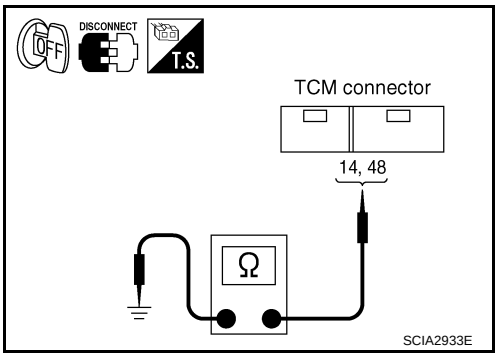

OK or NG

OK >> GO TO 5.
NG >> Repair open circuit or short to ground or short to power in harness or connectors.

5. CHECK O/D OFF INDICATOR LAMP CIRCUIT

1. Turn ignition switch “OFF”.
2. Check the combination meter.
   Refer to DI-5.

OK or NG

OK >> GO TO 6.
NG >> Replace the combination meter. Refer to DI-22, "Combination Meter".

6. SYMPTOM CHECK

Check again.

OK or NG

OK >> **INSPECTION END**
NG >> GO TO 7.

7. CHECK TCM

1. Check TCM input/output signal.
2. If NG, recheck TCM pin terminals for damage or loose connection with harness connector.

OK or NG

OK >> **INSPECTION END**
NG >> Repair or replace damaged parts.

Engine Cannot Be Started in "P" or "N" Position

INFOID:0000000001718062

SYMPTOM:

- **Engine cannot be started with selector lever in “P” or “N” position.**
- **Engine can be started with selector lever in “D”, “L” or “R” position.**

DIAGNOSTIC PROCEDURE

1. CHECK STARTING SYSTEM

Check starting system. Refer to SC-10.

OK or NG

OK >> GO TO 2.
NG >> Repair or replace damaged parts.

2. CHECK CONTROL CABLE

Check the control cable.

- Refer to AT-221, "Control Cable Adjustment".

OK or NG

OK >> GO TO 3.
NG >> Adjust control cable. Refer to AT-221, "Control Cable Adjustment".

3. CHECK PNP SWITCH CIRCUIT

Perform self-diagnosis.

Do the self-diagnostic results indicate PNP switch?

YES >> Check the malfunctioning system. Refer to AT-83.
NO >> **INSPECTION END**

In "P" Position, Vehicle Moves When Pushed

INFOID:0000000001718063

SYMPTOM:

Even though the selector lever is set in the "P" position, the parking mechanism is not actuated, allowing the vehicle to be moved when it is pushed.

DIAGNOSTIC PROCEDURE

1. CHECK PNP SWITCH CIRCUIT

Perform self-diagnosis.

Do the self-diagnostic results indicate PNP switch?

YES >> Check the malfunctioning system. Refer to AT-83.
NO >> GO TO 2.

2. CHECK CONTROL CABLE

Check the control cable.
- Refer to AT-221, "Control Cable Adjustment".

OK or NG

OK >> GO TO 3.
NG >> Adjust control cable. Refer to AT-221, "Control Cable Adjustment".

3. SYMPTOM CHECK

Check again.

OK or NG

OK >> **INSPECTION END**
NG >> Repair or replace damaged parts.

In "N" Position, Vehicle Moves

INFOID:0000000001718064

SYMPTOM:

Vehicle moves forward or backward when selecting "N" position.

DIAGNOSTIC PROCEDURE

1. CHECK A/T FLUID LEVEL

Check the A/T fluid level. Refer to AT-49, "Inspections Before Trouble Diagnosis".

OK or NG

OK >> GO TO 2.
NG >> Refill ATF.

2. CHECK PNP SWITCH CIRCUIT

Perform self-diagnosis.

Do the self-diagnostic results indicate PNP switch?

YES >> Check the malfunctioning system. Refer to AT-83.
NO >> GO TO 3.

3. CHECK CONTROL CABLE

Check the control cable.
- Refer to AT-221, "Control Cable Adjustment".

OK or NG

OK >> GO TO 3.
NG >> Adjust control cable. Refer to AT-221, "Control Cable Adjustment".

4. CHECK SYMPTOM

Check again.

OK or NG

OK >> **INSPECTION END**
NG >> GO TO 4.

5. CHECK TCM

1. Check TCM input/output signal. Refer to AT-66, "TCM Input/Output Signal Reference Value".
2. If NG, recheck TCM pin terminals for damage or loose connection with harness connector.

OK or NG

OK >> **INSPECTION END**
NG >> Repair or replace damaged parts.

Large Shock ("N" to "D" Position)

INFOID:0000000001718065

SYMPTOM:

A noticeable shock occurs when the selector lever is shifted from the “N” to “D” position.

DIAGNOSTIC PROCEDURE

1. CHECK A/T FLUID LEVEL

Check the A/T fluid level. Refer to AT-49, "Inspections Before Trouble Diagnosis".

OK or NG

OK >> GO TO 2.
NG >> Refill ATF.

2. CHECK SELF-DIAGNOSTIC RESULTS

Perform self-diagnosis.

Is any malfunction detected by self-diagnostic?

YES >> Check the malfunctioning system.
NO >> GO TO 3.

3. DETECT MALFUNCTIONING ITEM

1. Control valve assembly. Refer to AT-222, "Control Valve Assembly".
2. Disassemble A/T. Refer to AT-232.
3. Check the following items:

- Accumulator. Refer to AT-232.
- Forward and direct clutch assembly. Refer to AT-232.

OK or NG

OK >> GO TO 4.
NG >> Repair or replace damaged parts.

4. CHECK TCM

1. Check TCM input/output signal. Refer to AT-66, "TCM Input/Output Signal Reference Value".
2. If NG, recheck TCM pin terminals for damage or loose connection with harness connector.

OK or NG

OK >> GO TO 5.
NG >> Repair or replace damaged parts.

5. CHECK SYMPTOM

Check again.

OK or NG

OK >> **INSPECTION END**
NG >> Repair or replace damaged parts.

Vehicle Does Not Creep Backward in "R" Position

INFOID:0000000001718066

SYMPTOM:

The vehicle does not creep in the “R” position. Or an extreme lack of acceleration is observed.

DIAGNOSTIC PROCEDURE

1. CHECK A/T FLUID LEVEL

Check the A/T fluid level. Refer to AT-49, "Inspections Before Trouble Diagnosis".

OK or NG

OK >> GO TO 2.
NG >> Refill ATF.

2. CHECK CONTROL CABLE AND PNP SWITCH POSITION

Check the control cable and PNP switch position.
- Refer to AT-221, "Control Cable Adjustment".

OK or NG

OK >> GO TO 3.
NG >> Adjust control cable and PNP switch position. Refer to AT-221, "Control Cable Adjustment" or AT-219, "Park/Neutral Position (PNP) Switch Adjustment".

3. CHECK SELF-DIAGNOSTIC RESULTS

Perform self-diagnosis.

Is any malfunction detected by self-diagnostic?

YES >> Check the malfunctioning system.
NO >> GO TO 4.

4. DETECT MALFUNCTIONING ITEM

1. Control valve assembly. Refer to AT-222, "Control Valve Assembly".
2. Disassemble A/T. Refer to AT-232.
3. Check the following items:
- Forward and direct clutch assembly. Refer to AT-232.
- 1st and reverse brake. Refer to AT-232.
- B5 brake. Refer to AT-259, "Transaxle Case Cover & B5 Brake".
- Torque convertor. Refer to AT-232.

OK or NG

OK >> GO TO 5.
NG >> Repair or replace damaged parts.

5. CHECK TCM

1. Check TCM input/output signal. Refer to AT-66, "TCM Input/Output Signal Reference Value".
2. If NG, recheck TCM pin terminals for damage or loose connection with harness connector.

OK or NG

OK >> GO TO 6.
NG >> Repair or replace damaged parts.

6. CHECK SYMPTOM

Check again.

OK or NG

OK >> **INSPECTION END**
NG >> Repair or replace damaged parts.

Vehicle Does Not Creep Forward in "D" or "L" Position

INFOID:0000000001718067

SYMPTOM:
Vehicle does not creep forward when selecting “D” or “L” position.

DIAGNOSTIC PROCEDURE

1. CHECK A/T FLUID LEVEL

Check the A/T fluid level. Refer to AT-49, "Inspections Before Trouble Diagnosis".

OK or NG

OK >> GO TO 2.

NG >> Refill ATF.

2. CHECK CONTROL CABLE AND PNP SWITCH POSITION

Check the control cable and PNP switch position.
- Refer to AT-221, "Control Cable Adjustment".

OK or NG

OK >> GO TO 3.
NG >> Adjust control cable and PNP switch position. Refer to AT-221, "Control Cable Adjustment" or AT-219, "Park/Neutral Position (PNP) Switch Adjustment".

3. CHECK PRESSURE CONTROL SOLENOID VALVE A CIRCUIT

Perform self-diagnosis.

Do the self-diagnostic results indicate pressure control solenoid valve A?

YES >> Check the malfunctioning system. Refer to AT-130.
NO >> GO TO 4.

4. DETECT MALFUNCTIONING ITEM

1. Control valve assembly. Refer to AT-222, "Control Valve Assembly".
2. Disassemble A/T. Refer to AT-232.
3. Check the following items:
- Forward and direct clutch assembly. Refer to AT-232.
- One-way clutch No.2. Refer to AT-232.
- B5 brake. Refer to AT-259, "Transaxle Case Cover & B5 Brake".
- Torque convertor. Refer to AT-232.

OK or NG

OK >> GO TO 5.
NG >> Repair or replace damaged parts.

5. CHECK TCM

1. Check TCM input/output signal. Refer to AT-66, "TCM Input/Output Signal Reference Value".
2. If NG, recheck TCM pin terminals for damage or loose connection with harness connector.

OK or NG

OK >> GO TO 6.
NG >> Repair or replace damaged parts.

6. CHECK SYMPTOM

Check again.

OK or NG

OK >> **INSPECTION END**
NG >> Repair or replace damaged parts.

Vehicle Cannot Be Started from D1

INFOID:0000000001718068

SYMPTOM:
Vehicle cannot be started from D1 on cruise test - Part 1.

DIAGNOSTIC PROCEDURE

1. CONFIRM THE SYMPTOM

Check if vehicle creeps in “R” position.

OK or NG

OK >> GO TO 2.
NG >> Refer to AT-196, "Vehicle Does Not Creep Backward in "R" Position".

2. CHECK SELF-DIAGNOSTIC RESULTS

Perform self-diagnosis.

Is any malfunction detected by self-diagnostic?

YES >> Check the malfunctioning system.

NO >> GO TO 3.

3. CHECK LINE PRESSURE

Check the line pressure at the engine stall point. Refer to AT-49, "Inspections Before Trouble Diagnosis".

OK or NG

OK >> GO TO 4.
NG >> Check the malfunctioning item. Refer to AT-49, "Inspections Before Trouble Diagnosis".

4. DETECT MALFUNCTIONING ITEM

1. Control valve assembly. Refer to AT-222, "Control Valve Assembly".
2. Disassemble A/T. Refer to AT-232.
3. Check the following items:

- Forward and direct clutch assembly. Refer to AT-232.
- One-way clutch No.2. Refer to AT-232.
- B5 brake. Refer to AT-259, "Transaxle Case Cover & B5 Brake".

OK or NG

OK >> GO TO 5.
NG >> Repair or replace damaged parts.

5. CHECK TCM

1. Check TCM input/output signal. Refer to AT-66, "TCM Input/Output Signal Reference Value".
2. If NG, recheck TCM pin terminals for damage or loose connection with harness connector.

OK or NG

OK >> GO TO 6.
NG >> Repair or replace damaged parts.

6. CHECK SYMPTOM

Check again.

OK or NG

OK >> **INSPECTION END**
NG >> Repair or replace damaged parts.

A/T Does Not Shift: $D_1 \rightarrow D_2$

INFOID:0000000001718069

SYMPTOM:

The vehicle does not shift-up from the D_1 to D_2 gear at the specified speed.

DIAGNOSTIC PROCEDURE

1. CONFIRM THE SYMPTOM

Check if vehicle creeps forward in “D” or “L” position and vehicle can be started from D_1.

OK or NG

OK >> GO TO 2.
NG >> Refer to AT-197, "Vehicle Does Not Creep Forward in "D" or "L" Position", AT-198, "Vehicle Cannot Be Started from D_1".

2. CHECK A/T FLUID LEVEL

Check the A/T fluid level. Refer to AT-49, "Inspections Before Trouble Diagnosis".

OK or NG

OK >> GO TO 3.
NG >> Refill ATF.

3. CHECK SELF-DIAGNOSTIC RESULTS

Perform self-diagnosis.

Is any malfunction detected by self-diagnostic?

YES >> Check the malfunctioning system.
NO >> GO TO 4.

4. DETECT MALFUNCTIONING ITEM

1. Control valve assembly. Refer to AT-222, "Control Valve Assembly".
2. Disassemble A/T. Refer to AT-232.
3. Check the following items:

- One-way clutch No.1. Refer to AT-257, "One-Way Clutch Outer Race Sub Assembly & 2nd Coast Brake Hub & One-Way Clutch No.1".
- One-way clutch No.2. Refer to AT-232.
- 2nd coast brake. Refer to AT-251, "Oil Pump, 2nd Coast Brake & 2nd Brake", AT-257, "One-Way Clutch Outer Race Sub Assembly & 2nd Coast Brake Hub & One-Way Clutch No.1".
- 2nd brake. Refer to AT-251, "Oil Pump, 2nd Coast Brake & 2nd Brake".

OK or NG

OK >> GO TO 5.
NG >> Repair or replace damaged parts.

5. CHECK TCM

1. Check TCM input/output signal. Refer to AT-66, "TCM Input/Output Signal Reference Value".
2. If NG, recheck TCM pin terminals for damage or loose connection with harness connector.

OK or NG

OK >> GO TO 6.
NG >> Repair or replace damaged parts.

6. CHECK SYMPTOM

Check again.

OK or NG

OK >> **INSPECTION END**
NG >> Repair or replace damaged parts.

A/T Does Not Shift: $D_2 \rightarrow D_3$

INFOID:0000000001718070

SYMPTOM:

The vehicle does not shift-up from D_2 to D_3 gear at the specified speed.

DIAGNOSTIC PROCEDURE

1. CONFIRM THE SYMPTOM

Check if vehicle creeps forward in “D” or “L” position and vehicle can be started from D_1.

OK or NG

OK >> GO TO 2.
NG >> Refer to AT-197, "Vehicle Does Not Creep Forward in "D" or "L" Position",AT-198, "Vehicle Cannot Be Started from D_1".

2. CHECK A/T FLUID LEVEL

Check the A/T fluid level. Refer to AT-49, "Inspections Before Trouble Diagnosis".

OK or NG

OK >> GO TO 3.
NG >> Refill ATF.

3. CHECK SELF-DIAGNOSTIC RESULTS

Perform self-diagnosis.

Is any malfunction detected by self-diagnostic?

YES >> Check the malfunctioning system.
NO >> GO TO 4.

4. DETECT MALFUNCTIONING ITEM

1. Control valve assembly. Refer to AT-222, "Control Valve Assembly".
2. Disassemble A/T. Refer to AT-232.
3. Check the following items:

- U/D brake. Refer to AT-232.
- B5 brake. Refer to AT-259, "Transaxle Case Cover & B5 Brake".

OK or NG

OK >> GO TO 5.
NG >> Repair or replace damaged parts.

5. CHECK TCM

1. Check TCM input/output signal. Refer to AT-66, "TCM Input/Output Signal Reference Value".
2. If NG, recheck TCM pin terminals for damage or loose connection with harness connector.

OK or NG

OK >> GO TO 6.
NG >> Repair or replace damaged parts.

6. CHECK SYMPTOM

Check again.

OK or NG

OK >> **INSPECTION END**
NG >> Repair or replace damaged parts.

A/T Does Not Shift: D3→ D4

INFOID:0000000001718071

SYMPTOM:

- **The vehicle does not shift-up from the D3 to D4 gear at the specified speed.**
- **The vehicle does not shift-up from the D3 to D4 gear unless A/T is warmed up.**

DIAGNOSTIC PROCEDURE

1. CONFIRM THE SYMPTOM

Check if vehicle creeps forward in “D” or “L” position and vehicle can be started from D1.

OK or NG

OK >> GO TO 2.
NG >> Refer to AT-197, "Vehicle Does Not Creep Forward in "D" or "L" Position", AT-198, "Vehicle Cannot Be Started from D1".

2. CHECK A/T FLUID LEVEL

Check the A/T fluid level. Refer to AT-49, "Inspections Before Trouble Diagnosis".

OK or NG

OK >> GO TO 3.
NG >> Refill ATF.

3. CHECK SELF-DIAGNOSTIC RESULTS

Perform self-diagnosis.

Is any malfunction detected by self-diagnostic?

YES >> Check the malfunctioning system.
NO >> GO TO 4.

4. DETECT MALFUNCTIONING ITEM

1. Control valve assembly. Refer to AT-222, "Control Valve Assembly".
2. Disassemble A/T. Refer to AT-232.
3. Check the following items:
- U/D brake. Refer to AT-232.
- U/D clutch. Refer to AT-232.

OK or NG

OK >> GO TO 6.
NG >> Repair or replace damaged parts.

5. CHECK TCM

1. Check TCM input/output signal. Refer to AT-66, "TCM Input/Output Signal Reference Value".

2. If NG, recheck TCM pin terminals for damage or loose connection with harness connector.

OK or NG

OK >> GO TO 5.
NG >> Repair or replace damaged parts.

6. CHECK SYMPTOM

Check again.

OK or NG

OK >> **INSPECTION END**
NG >> Repair or replace damaged parts.

A/T Does Not Shift: $D_4 \rightarrow D_5$

INFOID:0000000001718072

SYMPTOM:

- **The vehicle does not shift-up from the D_4 to D_5 gear at the specified speed.**
- **The vehicle does not shift-up from the D_4 to D_5 gear unless A/T is warmed up.**

DIAGNOSTIC PROCEDURE

1. CONFIRM THE SYMPTOM

Check if vehicle creeps forward in “D” or “L” position and vehicle can be started from D_1.

OK or NG

OK >> GO TO 2.
NG >> Refer to AT-197, "Vehicle Does Not Creep Forward in "D" or "L" Position",AT-198, "Vehicle Cannot Be Started from D_1".

2. CHECK A/T FLUID LEVEL

Check the A/T fluid level. Refer to AT-49, "Inspections Before Trouble Diagnosis".

OK or NG

OK >> GO TO 3.
NG >> Refill ATF.

3. CHECK SELF-DIAGNOSTIC RESULTS

Perform self-diagnosis.

Is any malfunction detected by self-diagnostic?

YES >> Check the malfunctioning system.
NO >> GO TO 4.

4. DETECT MALFUNCTIONING ITEM

1. Control valve assembly. Refer to AT-222, "Control Valve Assembly".
2. Disassemble A/T. Refer to AT-232.
3. Check the following items:

- Forward and direct clutch assembly. Refer to AT-232.
- 2nd coast brake. Refer to AT-251, "Oil Pump, 2nd Coast Brake & 2nd Brake", AT-257, "One-Way Clutch Outer Race Sub Assembly & 2nd Coast Brake Hub & One-Way Clutch No.1".
- One-way clutch No.1. Refer to AT-257, "One-Way Clutch Outer Race Sub Assembly & 2nd Coast Brake Hub & One-Way Clutch No.1".

OK or NG

OK >> GO TO 5.
NG >> Repair or replace damaged parts.

5. CHECK TCM

1. Check TCM input/output signal. Refer to AT-66, "TCM Input/Output Signal Reference Value".
2. If NG, recheck TCM pin terminals for damage or loose connection with harness connector.

OK or NG

OK >> GO TO 6.
NG >> Repair or replace damaged parts.

6. CHECK SYMPTOM

Check again.

OK or NG

OK >> **INSPECTION END**
NG >> Repair or replace damaged parts.

A/T Does Not Perform Lock-up

INFOID:0000000001718073

SYMPTOM:

A/T does not perform lock-up at the specified speed.

DIAGNOSTIC PROCEDURE

1. CHECK A/T FLUID LEVEL

Check the A/T fluid level. Refer to AT-49, "Inspections Before Trouble Diagnosis".

OK or NG

OK >> GO TO 2.
NG >> Refill ATF.

2. CHECK STOP LAMP SWITCH CIRCUIT

Check the stop lamp switch circuit. Refer to BRC-10 (with TCS/ABS) or BRC-50 (with VDC/TCS/ABS).

OK or NG

OK >> GO TO 3.
NG >> Repair or replace damaged parts.

3. CHECK SELF-DIAGNOSTIC RESULTS

Perform self-diagnosis.

Is any malfunction detected by self-diagnostic?

YES >> Check the malfunctioning system.
NO >> GO TO 4.

4. DETECT MALFUNCTIONING ITEM

1. Control valve assembly. Refer to AT-222, "Control Valve Assembly".
2. Disassemble A/T. Refer to AT-232.
3. Check the following items:
- Torque converter. Refer to AT-232.

OK or NG

OK >> GO TO 5.
NG >> Repair or replace damaged parts.

5. CHECK TCM

1. Check TCM input/output signal. Refer to AT-66, "TCM Input/Output Signal Reference Value".
2. If NG, recheck TCM pin terminals for damage or loose connection with harness connector.

OK or NG

OK >> GO TO 6.
NG >> Repair or replace damaged parts.

6. CHECK SYMPTOM

Check again.

OK or NG

OK >> **INSPECTION END**
NG >> Repair or replace damaged parts.

A/T Does Not Hold Lock-up Condition

INFOID:0000000001718074

SYMPTOM:

The lock-up condition cannot be maintained for more than 30 seconds.

DIAGNOSTIC PROCEDURE

1.CHECK A/T FLUID LEVEL

Check the A/T fluid level. Refer to AT-49, "Inspections Before Trouble Diagnosis".

OK or NG

OK >> GO TO 2.
NG >> Refill ATF.

2.CHECK STOP LAMP SWITCH CIRCUIT

Check the stop lamp switch circuit. Refer to BRC-10 (with TCS/ABS) or BRC-50 (with VDC/TCS/ABS).

OK or NG

OK >> GO TO 3.
NG >> Repair or replace damaged parts.

3.CHECK SELF-DIAGNOSTIC RESULTS

Perform self-diagnosis.

Is any malfunction detected by self-diagnostic?

YES >> Check the malfunctioning system.
NO >> GO TO 4.

4.DETECT MALFUNCTIONING ITEM

1. Control valve assembly. Refer to AT-222, "Control Valve Assembly".
2. Disassemble A/T. Refer to AT-232.
3. Check the following items:
- Torque converter. Refer to AT-232.

OK or NG

OK >> GO TO 5.
NG >> Repair or replace damaged parts.

5.CHECK TCM

1. Check TCM input/output signal. Refer to AT-66, "TCM Input/Output Signal Reference Value".
2. If NG, recheck TCM pin terminals for damage or loose connection with harness connector.

OK or NG

OK >> GO TO 6.
NG >> Repair or replace damaged parts.

6.CHECK SYMPTOM

Check again.

OK or NG

OK >> **INSPECTION END**
NG >> Repair or replace damaged parts.

Lock-up Is Not Released

INFOID:0000000001718075

SYMPTOM:

The lock-up condition cannot be cancelled even after releasing the accelerator pedal.

DIAGNOSTIC PROCEDURE

1.CHECK A/T FLUID LEVEL

Check the A/T fluid level. Refer to AT-49, "Inspections Before Trouble Diagnosis".

OK or NG

OK >> GO TO 2.
NG >> Refill ATF.

2.CHECK STOP LAMP SWITCH CIRCUIT

Check the stop lamp switch circuit. Refer to BRC-10 (with TCS/ABS) or BRC-50 (with VDC/TCS/ABS).

OK or NG

OK >> GO TO 3.
NG >> Repair or replace damaged parts.

3. CHECK SELF-DIAGNOSTIC RESULTS

Perform self-diagnosis.

Is any malfunction detected by self-diagnostic?

YES >> Check the malfunctioning system.
NO >> GO TO 4.

4. DETECT MALFUNCTIONING ITEM

1. Control valve assembly. Refer to AT-222, "Control Valve Assembly".
2. Disassemble A/T. Refer to AT-232.
3. Check the following items:
- Torque converter. Refer to AT-232.

OK or NG

OK >> GO TO 5.
NG >> Repair or replace damaged parts.

5. CHECK TCM

1. Check TCM input/output signal. Refer to AT-66, "TCM Input/Output Signal Reference Value".
2. If NG, recheck TCM pin terminals for damage or loose connection with harness connector.

OK or NG

OK >> GO TO 6.
NG >> Repair or replace damaged parts.

6. CHECK SYMPTOM

Check again.

OK or NG

OK >> **INSPECTION END**
NG >> Repair or replace damaged parts.

A/T Does Not Shift: 5th gear → 4th gear, When Lever Switch "OFF" → "ON"

INFOID:0000000001718076

SYMPTOM:

A/T does not shift from D_5 to D_4, when pushed lever switch to “ON” position. (O/D OFF indicator lamp “ON” and A/T indicator “4”.)

DIAGNOSTIC PROCEDURE

1. CHECK A/T FLUID LEVEL

Check the A/T fluid level. Refer to AT-49, "Inspections Before Trouble Diagnosis".

OK or NG

OK >> GO TO 2.
NG >> Refill ATF.

2. CHECK SELF-DIAGNOSTIC RESULTS

Perform self-diagnosis.

Is any malfunction detected by self-diagnostic?

YES >> Check the malfunctioning system.
NO >> GO TO 3.

3. DETECT MALFUNCTIONING ITEM

1. Control valve assembly. Refer to AT-222, "Control Valve Assembly".
2. Disassemble A/T. Refer to AT-232.
3. Check the following items:
- Forward and direct clutch assembly. Refer to AT-232.

- 2nd coast brake. Refer to AT-251, "Oil Pump, 2nd Coast Brake & 2nd Brake", AT-257, "One-Way Clutch Outer Race Sub Assembly & 2nd Coast Brake Hub & One-Way Clutch No.1".
- One-way clutch No.1. Refer to AT-257, "One-Way Clutch Outer Race Sub Assembly & 2nd Coast Brake Hub & One-Way Clutch No.1".

OK or NG

OK >> GO TO 4.
NG >> Repair or replace damaged parts.

4. CHECK TCM

1. Check TCM input/output signal. Refer to AT-66, "TCM Input/Output Signal Reference Value".
2. If NG, recheck TCM pin terminals for damage or loose connection with harness connector.

OK or NG

OK >> GO TO 5.
NG >> Repair or replace damaged parts.

5. CHECK SYMPTOM

Check again.

OK or NG

OK >> **INSPECTION END**
NG >> Repair or replace damaged parts.

A/T Does Not Shift: 4th gear → 3rd gear, When Selector Lever "D" → "L" Position

INFOID:0000000001718077

SYMPTOM:

A/T does not shift from D_4 to L_3, when changed selector lever from “D” to “L” position. (A/T indicator “3”.)

DIAGNOSTIC PROCEDURE

1. CHECK A/T FLUID LEVEL

Check the A/T fluid level. Refer to AT-49, "Inspections Before Trouble Diagnosis".

OK or NG

OK >> GO TO 2.
NG >> Refill ATF.

2. CHECK SELF-DIAGNOSTIC RESULTS

Perform self-diagnosis.

Is any malfunction detected by self-diagnostic?

YES >> Check the malfunctioning system.
NO >> GO TO 3.

3. DETECT MALFUNCTIONING ITEM

1. Control valve assembly. Refer to AT-222, "Control Valve Assembly".
2. Disassemble A/T. Refer to AT-232.
3. Check the following items:

- U/D clutch. Refer to AT-232.
- U/D brake. Refer to AT-232.

OK or NG

OK >> GO TO 4.
NG >> Repair or replace damaged parts.

4. CHECK TCM

1. Check TCM input/output signal. Refer to AT-66, "TCM Input/Output Signal Reference Value".
2. If NG, recheck TCM pin terminals for damage or loose connection with harness connector.

OK or NG

OK >> GO TO 5.
NG >> Repair or replace damaged parts.

5. CHECK SYMPTOM

Check again.

OK or NG

OK >> **INSPECTION END**
NG >> Repair or replace damaged parts.

A/T Does Not Shift: 3rd gear → 2nd gear, When Lever Switch "OFF" → "ON"

INFOID:0000000001718078

SYMPTOM:

A/T does not shift from L_3 to L_2, when pushed lever switch to “ON” position. (A/T indicator “2”.)

DIAGNOSTIC PROCEDURE

1. CHECK A/T FLUID LEVEL

Check the A/T fluid level. Refer to AT-49, "Inspections Before Trouble Diagnosis".

OK or NG

OK >> GO TO 2.
NG >> Refill ATF.

2. CHECK SELF-DIAGNOSTIC RESULTS

Perform self-diagnosis.

Is any malfunction detected by self-diagnostic?

YES >> Check the malfunctioning system.
NO >> GO TO 3.

3. DETECT MALFUNCTIONING ITEM

1. Control valve assembly. Refer to AT-222, "Control Valve Assembly".
2. Disassemble A/T. Refer to AT-232.
3. Check the following items:

- U/D brake. Refer to AT-232.
- B5 brake. Refer to AT-259, "Transaxle Case Cover & B5 Brake".

OK or NG

OK >> GO TO 4.
NG >> Repair or replace damaged parts.

4. CHECK TCM

1. Check TCM input/output signal. Refer to AT-66, "TCM Input/Output Signal Reference Value".
2. If NG, recheck TCM pin terminals for damage or loose connection with harness connector.

OK or NG

OK >> GO TO 5.
NG >> Repair or replace damaged parts.

5. CHECK SYMPTOM

Check again.

OK or NG

OK >> **INSPECTION END**
NG >> Repair or replace damaged parts.

A/T Does Not Shift: 2nd gear → 1st gear, When Release Accelerator Pedal

INFOID:0000000001718079

SYMPTOM:

A/T does not shift from L_2 to L_1, when releasing accelerator pedal.

DIAGNOSTIC PROCEDURE

1. CHECK A/T FLUID LEVEL

Check the A/T fluid level. Refer to AT-49, "Inspections Before Trouble Diagnosis".

OK or NG

OK >> GO TO 2.
NG >> Refill ATF.

2. CHECK SELF-DIAGNOSTIC RESULTS

Perform self-diagnosis.

Is any malfunction detected by self-diagnostic?

YES >> Check the malfunctioning system.
NO >> GO TO 3.

3. DETECT MALFUNCTIONING ITEM

1. Control valve assembly. Refer to AT-222, "Control Valve Assembly".
2. Disassemble A/T. Refer to AT-232.
3. Check the following items:

- 2nd coast brake. Refer to AT-251, "Oil Pump, 2nd Coast Brake & 2nd Brake", AT-257, "One-Way Clutch Outer Race Sub Assembly & 2nd Coast Brake Hub & One-Way Clutch No.1".
- 2nd brake. Refer to AT-251, "Oil Pump, 2nd Coast Brake & 2nd Brake".
- One-way clutch No.1. Refer to AT-257, "One-Way Clutch Outer Race Sub Assembly & 2nd Coast Brake Hub & One-Way Clutch No.1".
- One-way clutch No.2. Refer to AT-232.

OK or NG

OK >> GO TO 4.
NG >> Repair or replace damaged parts.

4. CHECK TCM

1. Check TCM input/output signal. Refer to AT-66, "TCM Input/Output Signal Reference Value".
2. If NG, recheck TCM pin terminals for damage or loose connection with harness connector.

OK or NG

OK >> GO TO 5.
NG >> Repair or replace damaged parts.

5. CHECK SYMPTOM

Check again.

OK or NG

OK >> **INSPECTION END**
NG >> Repair or replace damaged parts.

Vehicle Does Not Decelerate By Engine Brake

INFOID:0000000001718080

SYMPTOM:

No engine brake is applied when the gear is shifted from the 2nd to 1st gear in “L” position.

DIAGNOSTIC PROCEDURE

1. CHECK A/T FLUID LEVEL

Check the A/T fluid level. Refer to AT-49, "Inspections Before Trouble Diagnosis".

OK or NG

OK >> GO TO 2.
NG >> Refill ATF.

2. CHECK SELF-DIAGNOSTIC RESULTS

Perform self-diagnosis.

Do the self-diagnostic results indicate shift solenoid valve E, electric throttle control system?

YES >> Check the malfunctioning system. Refer to AT-160, AT-192.
NO >> GO TO 3.

3. DETECT MALFUNCTIONING ITEM

1. Control valve assembly. Refer to AT-222, "Control Valve Assembly".
2. Disassemble A/T. Refer to AT-232.
3. Check the following items:
- 2nd coast brake. Refer to AT-251, "Oil Pump, 2nd Coast Brake & 2nd Brake", AT-257, "One-Way Clutch Outer Race Sub Assembly & 2nd Coast Brake Hub & One-Way Clutch No.1".
- U/D brake. Refer to AT-232.
- B5 brake. Refer to AT-259, "Transaxle Case Cover & B5 Brake".

OK or NG

OK >> GO TO 4.
NG >> Repair or replace damaged parts.

4. CHECK TCM

1. Check TCM input/output signal. Refer to AT-66, "TCM Input/Output Signal Reference Value".
2. If NG, recheck TCM pin terminals for damage or loose connection with harness connector.

OK or NG

OK >> GO TO 5.
NG >> Repair or replace damaged parts.

5. CHECK SYMPTOM

Check again.

OK or NG

OK >> **INSPECTION END**
NG >> Repair or replace damaged parts.

TCM Self-Diagnosis Does Not Activate

INFOID:0000000001718081

SYMPTOM:
O/D OFF indicator lamp does not come on in TCM self-diagnostic procedure even if the lamp circuit is good.

DESCRIPTION

- **Park/neutral position (PNP) switch**
  The park/neutral (PNP) switch assembly includes a transmission range switch. The transmission range switch detects the selector lever position and sends a signal to the TCM.
- **Stop lamp switch signal**
  Detects the brake pedal state (stop lamp switch is ON or OFF) and sends a signal via CAN communication line to the TCM.
- **Closed throttle position signal**
  ECM judges throttle opening based on a signal from accelerator pedal position sensor, and sends the signal via CAN communication line to TCM.

DIAGNOSTIC PROCEDURE

1. CHECK PARK/ NEUTRAL POSITION (PNP) SWITCH CIRCUIT

Check the park/neutral position (PNP) switch circuit. Refer to AT-83.

OK or NG

OK >> GO TO 2.
NG >> Repair or replace damaged parts.

2. CHECK STOP LAMP SWITCH CIRCUIT

Check the stop lamp switch circuit. Refer to BRC-10 (with TCS/ABS) or BRC-50 (with VDC/TCS/ABS).

OK or NG

OK >> GO TO 3.
NG >> Repair or replace damaged parts.

3. CHECK CLOSED THROTTLE POSITION SIGNAL CIRCUIT

Perform self-diagnosis for ECM. Refer to EC-43, "Emission-related Diagnostic Information".

OK or NG

OK >> GO TO 4.

NG >> Repair or replace damaged parts.

4. CHECK DATA MONITOR (WITH CONSULT-III)

With CONSULT-III

1. Turn ignition switch “ON”. (Do not start engine.)
2. Select “A/T” with “DATA MONITOR” mode in CONSULT-III.
3. Depress or release accelerator pedal and read out ON/OFF signaling action of the “CLSD THL POS”.
4. Depress or release brake pedal and read out ON/OFF signaling action of the “BRAKE SW”.

OK or NG

OK >> GO TO 7.
NG >> GO TO 5.

5. CHECK TCM

1. Check TCM input/output signal. Refer to AT-66, "TCM Input/Output Signal Reference Value".
2. If NG, recheck TCM pin terminals for damage or loose connection with harness connector.

OK or NG

OK >> GO TO 6.
NG >> Repair or replace damaged parts.

6. CHECK CAN COMMUNICATION LINE

Check the CAN communication line. Refer to AT-77.

OK or NG

OK >> GO TO 7.
NG >> Repair or replace damaged parts.

7. CHECK SYMPTOM

Check again.

OK or NG

OK >> **INSPECTION END**
NG >> Replace the TCM.

A/T SHIFT LOCK SYSTEM

Description

INFOID:0000000001718082

- The mechanical key interlock mechanism also operates as a shift lock:
  With the ignition switch turned to ON, the selector lever cannot be shifted from “P” (parking) to any other position unless the brake pedal is depressed.
  With the key removed, the selector lever cannot be shifted from “P” to any other position.
  The key cannot be removed unless the selector lever is placed in “P”.
- The shift lock and key interlock mechanisms are controlled by the ON-OFF operation of the shift lock solenoid and by the operation of the rotator and slider located inside the key cylinder.

Shift Lock System Electrical Parts Location

INFOID:0000000001718083

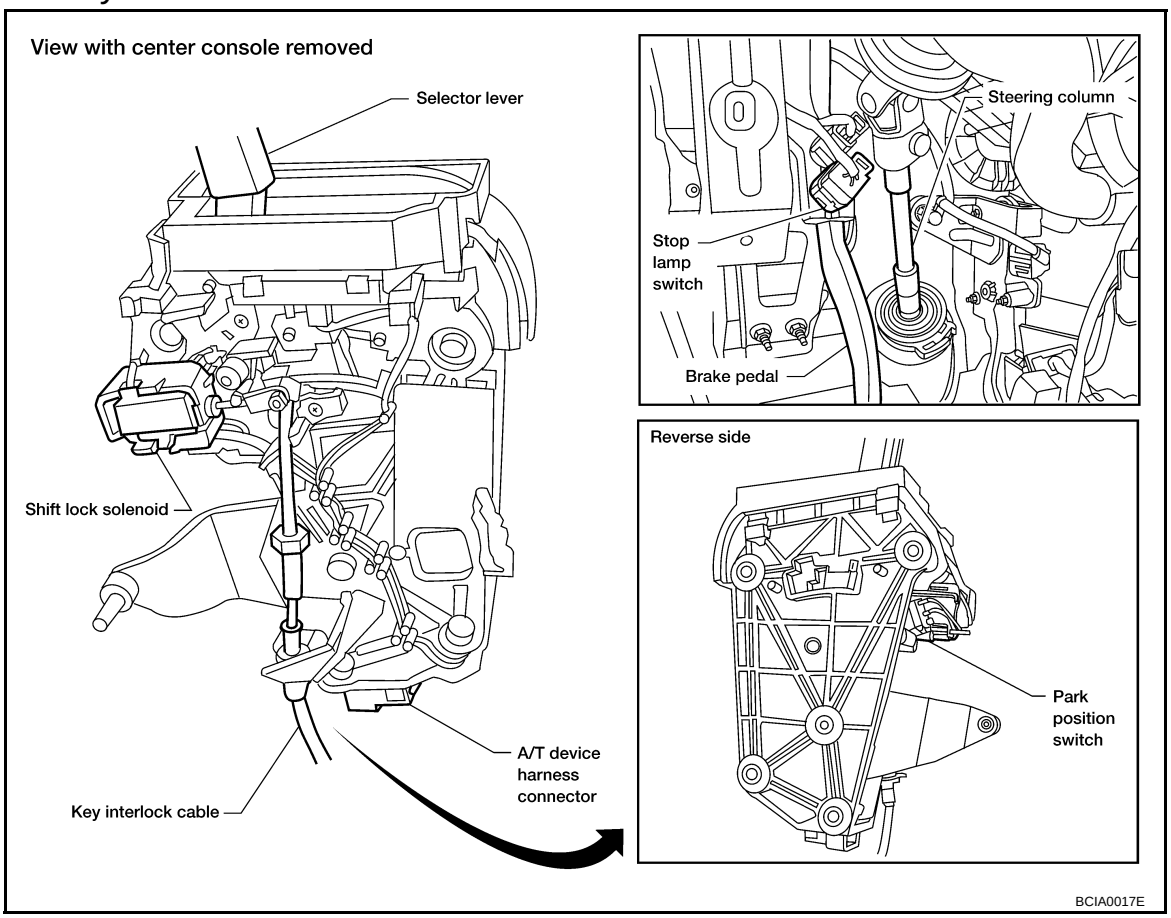

Wiring Diagram - AT - SHIFT

INFOID:0000000001718084

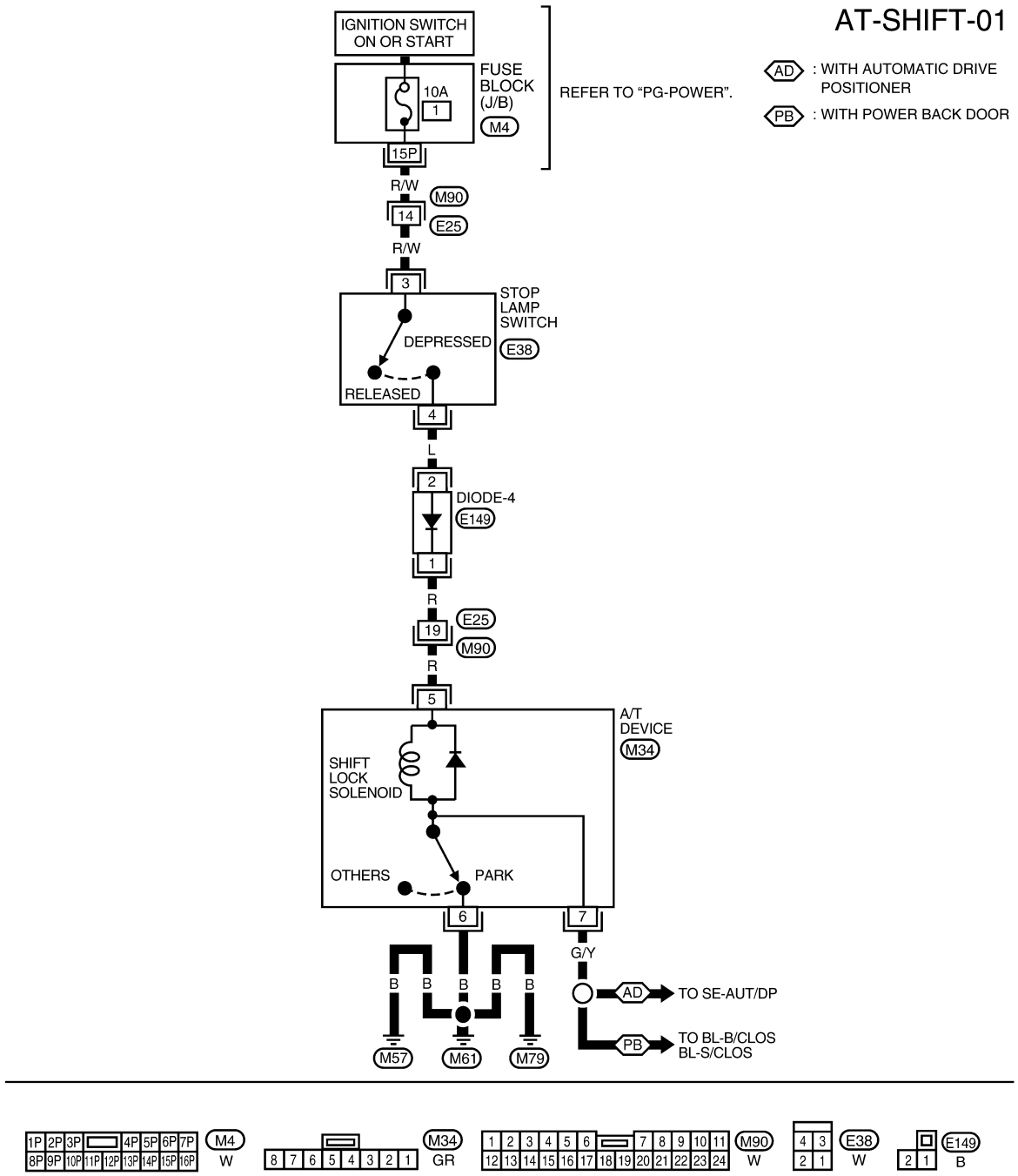

Diagnosis Procedure

INFOID:0000000001718085

SYMPTOM 1:

- **Selector lever cannot be moved from "P" position with key in ON position and brake pedal applied.**
- **Selector lever can be moved from "P" position with key in ON position and brake pedal released.**
- **Selector lever can be moved from "P" position when key is removed from key cylinder.**

SYMPTOM 2:

- **Ignition key cannot be removed when selector lever is set to “P” position.**
- **Ignition key can be removed when selector lever is set to any position except “P”.**

1. CHECK KEY INTERLOCK CABLE

Check the key interlock cable for damage.

OK or NG

OK >> GO TO 2.
NG >> Repair key interlock cable. Refer to AT-217.

2. CHECK SELECTOR LEVER POSITION

Check the selector lever position for damage.

OK or NG

OK >> GO TO 3.
NG >> Check selector lever. Refer to AT-221, "Control Cable Adjustment".

3. CHECK SHIFT LOCK SOLENOID AND PARK POSITION SWITCH

1. Connect A/T device harness connector.
2. Turn ignition switch “ON”.
3. Selector lever is set in “P” position.
4. Check operation sound.

Condition	Brake pedal	Operation sound
When ignition switch is turned to “ON” position and selector lever is set in “P” position.	Depressed	Yes
	Released	No

OK or NG

OK >> **INSPECTION END**
NG >> GO TO 4.

4. CHECK POWER SOURCE

1. Turn ignition switch “ON”. (Do not start engine.)
2. Check the voltage between A/T device harness connector M34 terminal 5 and ground.

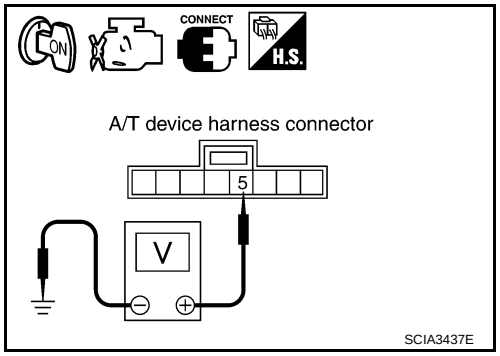

Condition	Brake pedal	Data (Approx.)
When ignition switch is turned to “ON” position.	Depressed	Battery voltage
	Released	0V

OK or NG

OK >> GO TO 7.
NG >> GO TO 5.

5. CHECK STOP LAMP SWITCH

1. Turn ignition switch “OFF”.
2. Disconnect stop lamp switch harness connector.

3. Check continuity between stop lamp switch terminals 3 and 4.

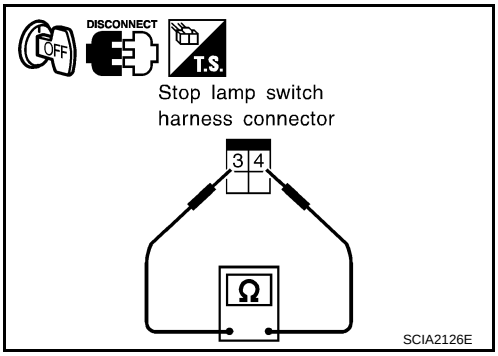

Condition	Continuity
When brake pedal is depressed	Yes
When brake pedal is released	No

Check stop lamp switch after adjusting brake pedal — refer to BR-5.

OK or NG

OK >> GO TO 6.
NG >> Repair or replace damaged parts.

6. DETECT MALFUNCTIONING ITEM

Check the following items. If any items are damaged, repair or replace damaged parts.

- 10A fuse [No.1, located in the fuse block (J/B)]
- Harness for short or open between ignition switch and stop lamp switch harness connector E38 terminal 3.
- Harness for short or open between stop lamp switch harness connector E38 terminal 4 and diode-4 harness connector E149 terminal 2.
- Harness for short or open between diode-4 harness connector E149 terminal 1 and A/T device harness connector M34 terminal 5.
- Diode-4
- Ignition switch (Refer to PG-3.)

OK or NG

OK >> GO TO 7.
NG >> Repair or replace damaged parts.

7. CHECK GROUND CIRCUIT

1. Turn ignition switch “OFF”.
2. Disconnect A/T device harness connector.
3. Check continuity between A/T device harness connector M34 terminal 6 and ground.

Continuity should exist.

4. Connect A/T device harness connector.

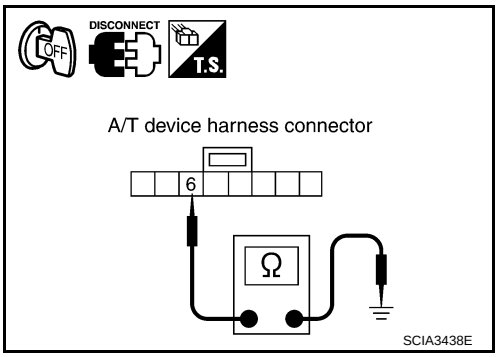

OK or NG

OK >> Replace shift lock solenoid or park position switch.
NG >> Repair open circuit or short to ground or short to power in harness or connectors.

SHIFT CONTROL SYSTEM

Removal and Installation

INFOID:0000000001718086

CONTROL DEVICE

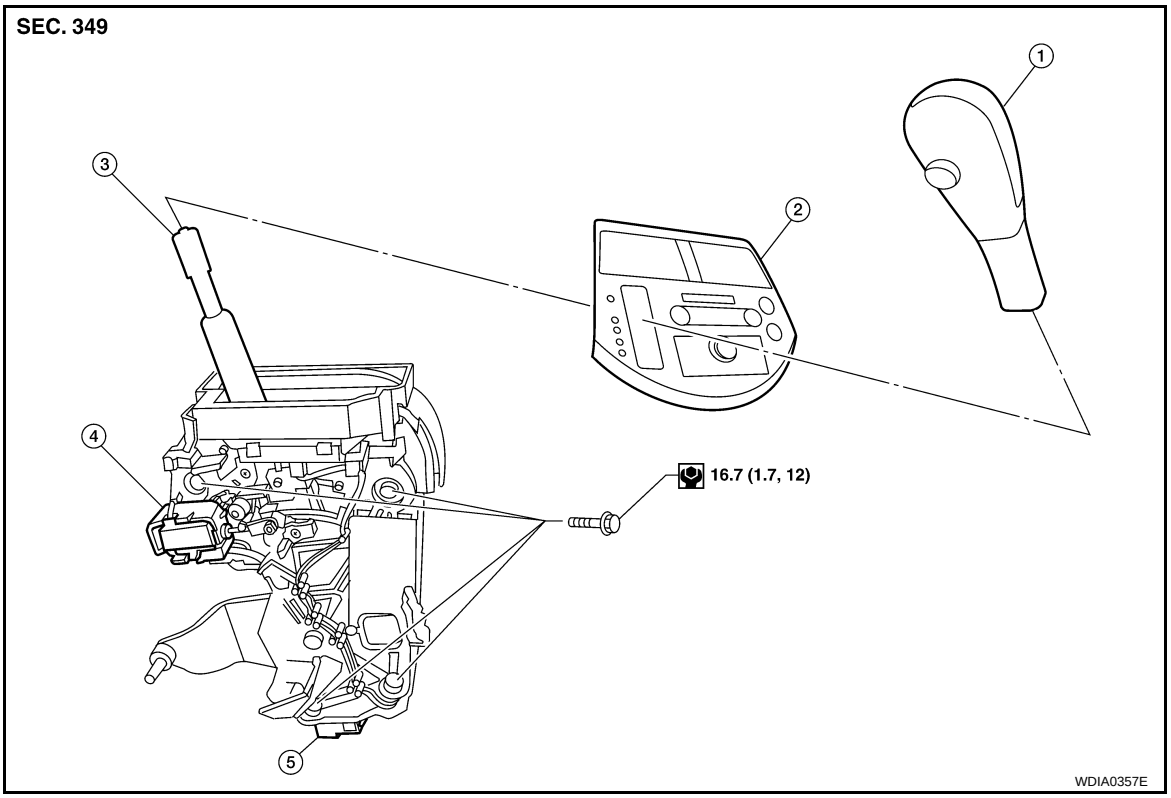

1. Selector knob
2. Cluster lid C
3. Selector lever
4. Shift lock solenoid
5. A/T device harness connector

SELECTOR KNOB

Removal

- ⇐ : Front of vehicle

1. Slide the selector knob cover (1) downwards with fingers to reveal the selector knob clip (2).
2. Gently pry the selector knob clip (2) outward to remove it using suitable tool.
3. Lift the selector knob up to remove.

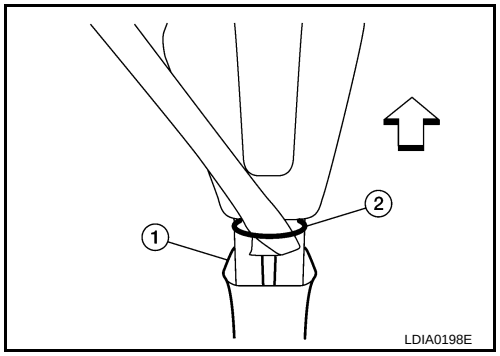

Installation

1. Set the selector knob in place on the selector lever and push the selector knob downward.
2. Install the selector knob clip into the groove on the selector knob.
3. Slide the selector knob cover upwards to conceal the selector knob clip.

CONTROL CABLE

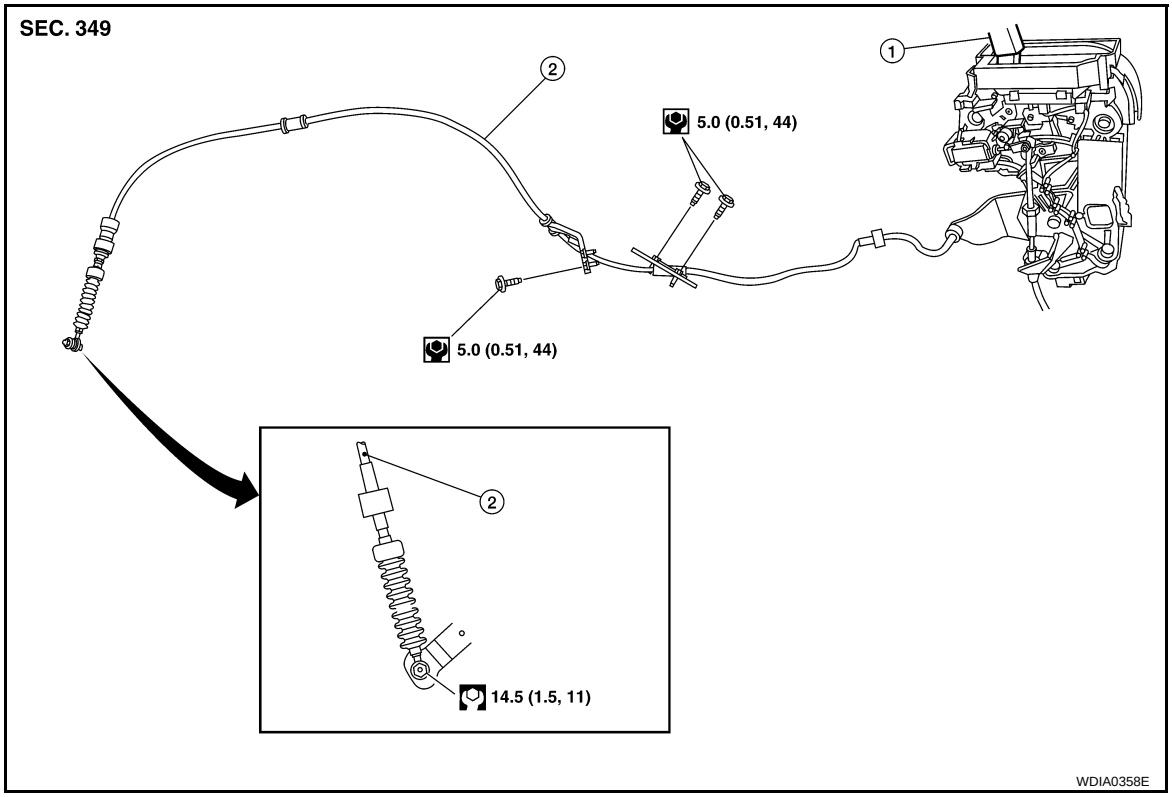

1. Selector lever
2. Control cable

KEY INTERLOCK CABLE

Component

INFOID:0000000001718087

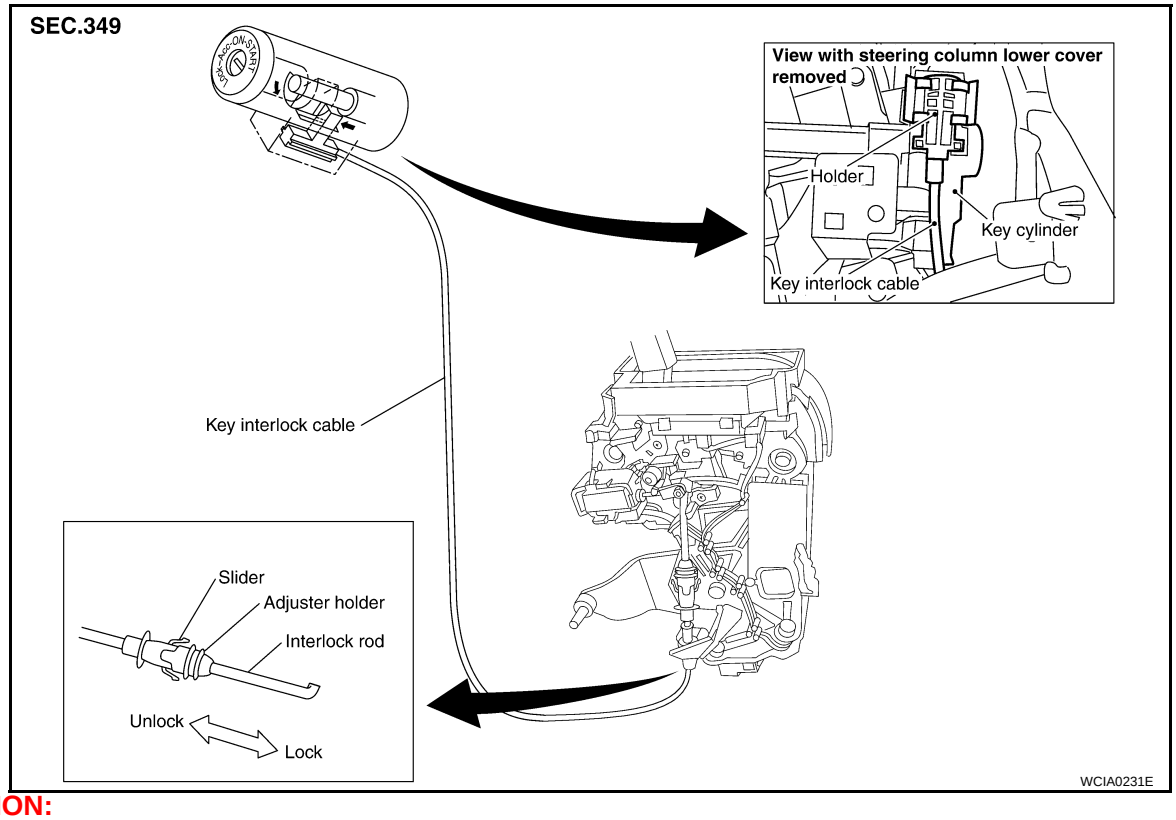

CAUTION:

- **Install key interlock cable in such a way that it will not be damaged by sharp bends, twists or interference with adjacent parts.**
- **After installing key interlock cable to control device, make sure that casing cap and bracket are firmly secured in their positions. If casing cap can be removed with an external load of less than 39.2 N (4.0 kg, 8.8 lb), replace key interlock cable with new one.**

Removal

INFOID:0000000001718088

1. Unlock slider by squeezing lock tabs on slider from adjuster holder.
2. Remove casing cap from bracket of control device and remove interlock rod from cable.

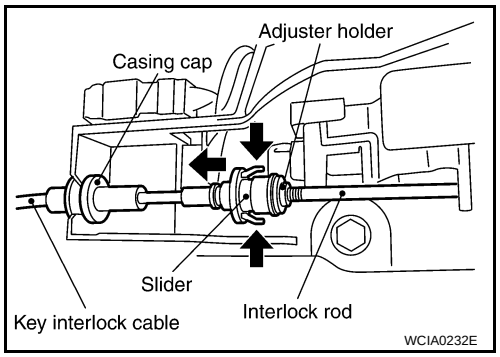

3. Remove holder from key cylinder and remove key interlock cable.

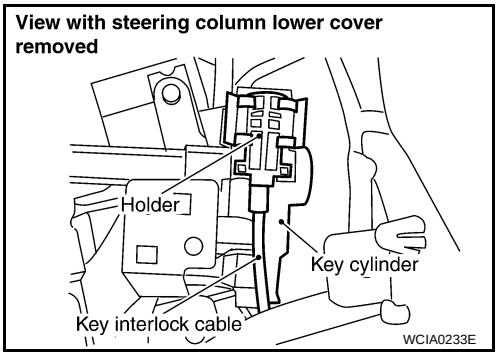

Installation

INFOID:0000000001718089

1. Set key interlock cable to key cylinder and install holder.
2. Turn ignition key to lock position.
3. Set selector lever to P position.

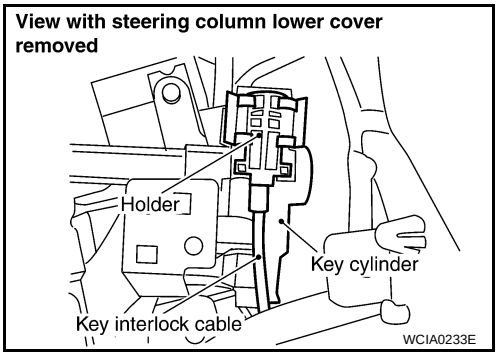

4. Insert interlock rod into adjuster holder.
5. Install casing cap to bracket.
6. Move slider in order to secure adjuster holder to interlock rod.

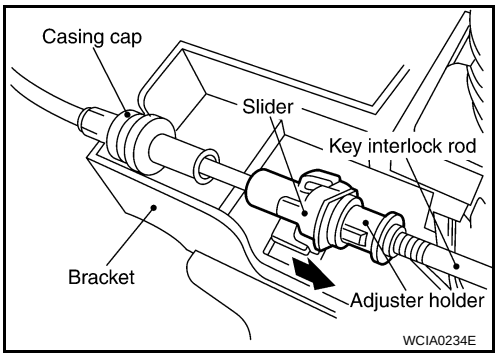

ON-VEHICLE SERVICE

Revolution Sensor Replacement

INFOID:0000000001718090

1. Remove intake air duct.
2. Disconnect electrical connector.
3. Remove revolution sensor from A/T.
4. Reinstall any part removed.
   - **Do not reuse seal bolt.**

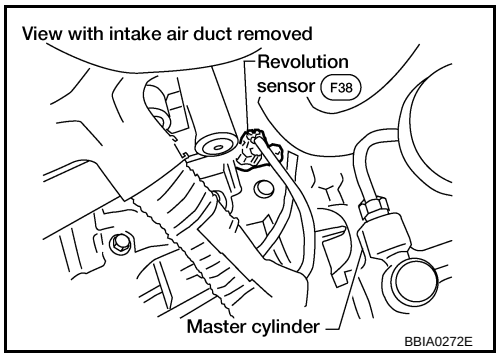

Turbine Revolution Sensor Replacement

INFOID:0000000001718091

1. Remove battery and bracket.
2. Disconnect electrical connector.
3. Remove bolt, and turbine revolution sensor from A/T.
4. Reinstall any part removed.
   - **Do not reuse seal bolt.**

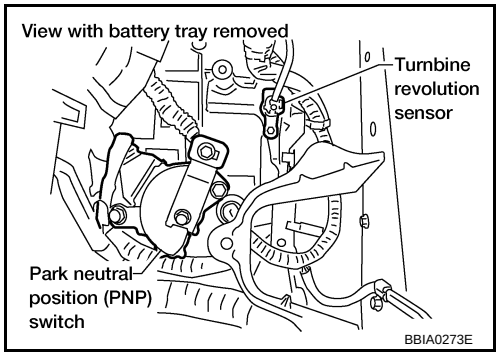

Park/Neutral Position (PNP) Switch Adjustment

INFOID:0000000001718092

1. Remove battery and bracket.
2. Remove cable from range lever.
3. Set range lever in neutral position.
4. Remove range lever and install Tool.

Tool number : KV911J0060 (J-45404)

5. Loosen park/neutral position (PNP) switch bolts.
6. Adjust PNP switch so that Tool pointer aligns with neutral base line on PNP switch body.

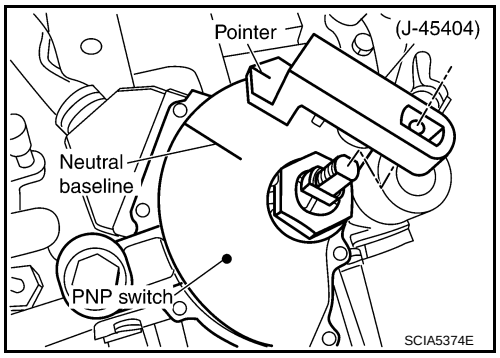

7. Tighten PNP switch bolts.
8. Reinstall range lever and cable.
9. Adjust control cable. Refer to AT-221, "Control Cable Adjustment".
10. Reinstall battery and bracket.
11. Check continuity of PNP switch. Refer to AT-87, "Component Inspection".

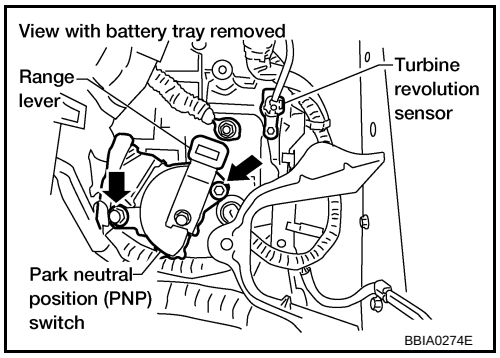

ATF Cooler

INFOID:0000000001718093

REMOVAL

1. Drain ATF.
2. Drain engine coolant. Refer to MA-13, "Changing Engine Coolant".
3. Remove hose clamps and hoses from ATF cooler.
4. Remove bolt from ATF cooler and remove ATF cooler.

INSTALLATION

Installation is the reverse order of removal.

- **Do not reuse sealing parts.**

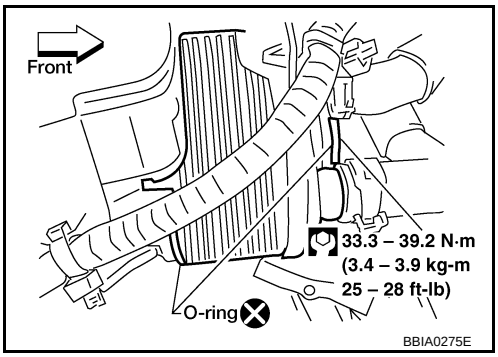

ATF Cooler Valve

INFOID:0000000001718094

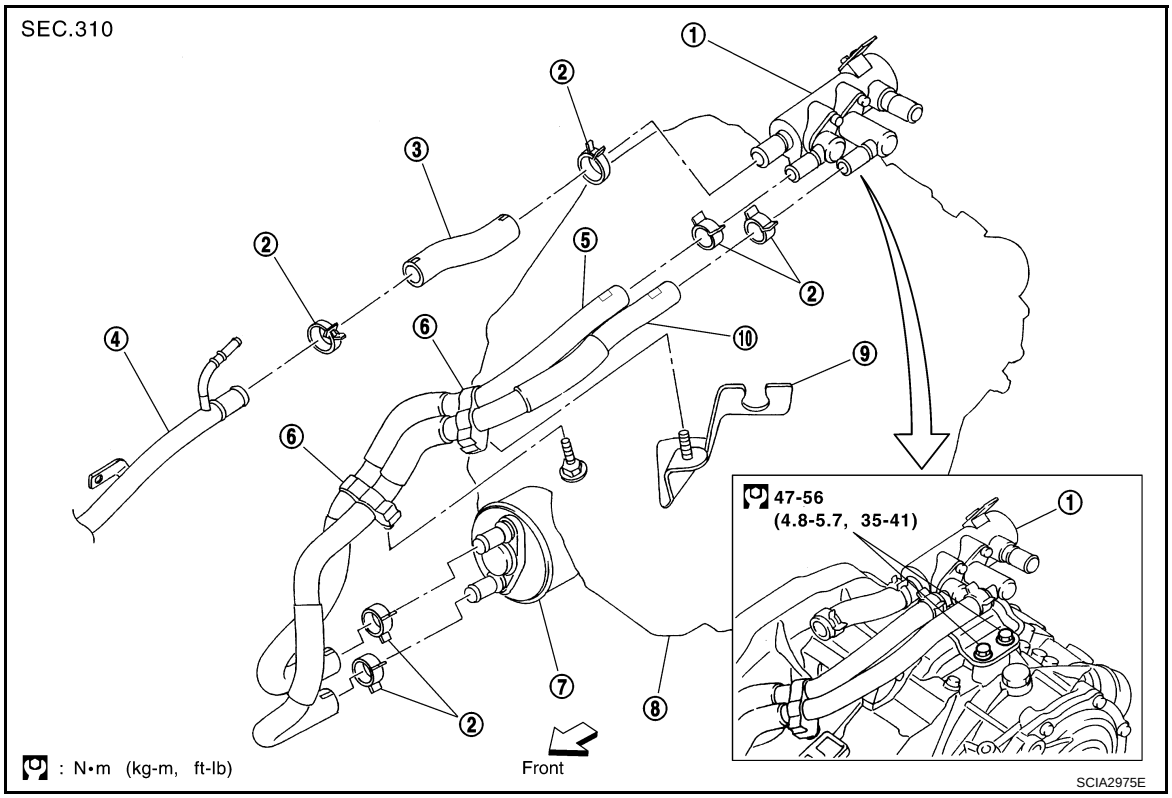

1. ATF cooler valve assembly	2. Hose clamp	3. Heater hose
4. Heater pipe	5. Outlet water hose	6. Hose clip
7. ATF cooler assembly	8. Transaxle assembly	9. Control cable bracket
10. Inlet water hose		

COMPONENT INSPECTION

1. Make sure that ATF cooler valve is fully opened at room temperature.

Dimension "A": More than 72.0 mm (2.835 in)

A: Distance between ATF cooler valve port end face and valve shaft end face.

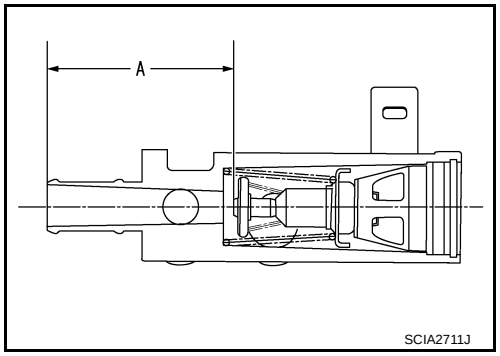

2. Submerge ATF cooler valve in a water-filled container, and then heat it up with temperature of over 82°C (180°F) for 10 minutes more.

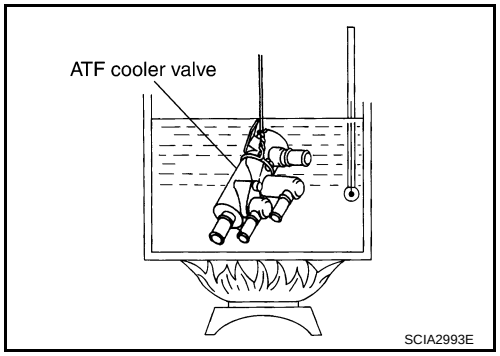

3. Make sure that ATF cooler valve is fully closed.

Dimension "A": Less than 66.5 mm (2.618 in)

A: Distance between ATF cooler valve port end face and valve shaft end face.

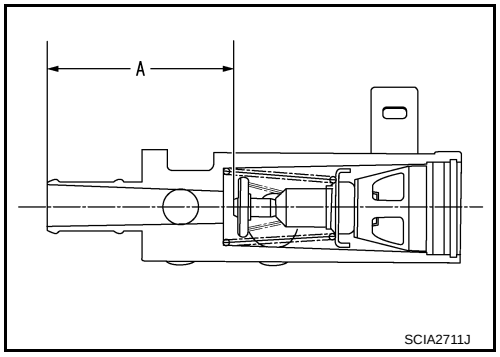

Control Cable Adjustment

INFOID:0000000001718095

Move selector lever from the P position to the D position. You should be able to feel the detent in each position. If the detent cannot be felt or the pointer indicating the position is improperly aligned, the control cable needs adjustment.

1. Place selector lever in the P position.
   CAUTION:
   Turn wheels more than 1/4 turn and apply the parking brake.
2. Loosen control cable lock nut.
3. Using the specified force, push control cable in the direction of the arrow shown.

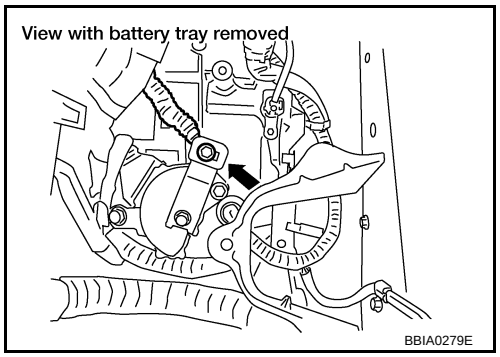

Specified force : 9.8 N (1.0 kg, 2.2 lb)

4. Tighten control cable lock nut.
5. Move selector lever from P to D position. Make sure that selector lever moves smoothly.
   - **Make sure that the starter operates when the selector lever is placed in the N or P position.**
   - **Make sure that the transmission is locked properly when the selector lever is placed in the P position.**

Side cover

INFOID:0000000001718096

REMOVAL

1. Remove engine under cover.
2. Drain ATF. Refer to MA-24, "Changing A/T Fluid".
3. Remove side cover bolts and side cover.

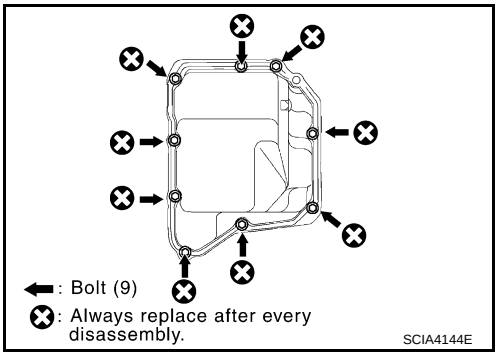

INSTALLATION

Installation is the reverse order of removal. Refer to AT-225, "Component".

Control Valve Assembly

INFOID:0000000001718097

REMOVAL

1. Remove side cover. Refer to AT-222, "Side cover".
2. Disconnect solenoid valve connectors.
3. Disconnect control valve assembly bolts and remove control valve assembly.

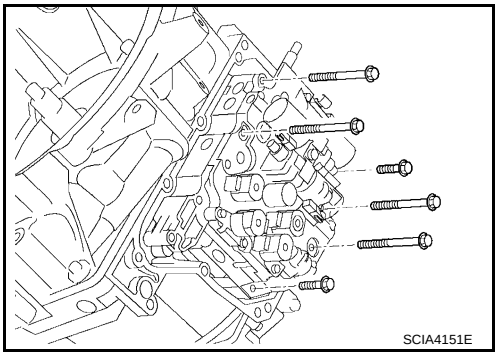

INSTALLATION

Installation is the reverse order of removal.

- Install bolts in sequence as shown. Refer to AT-225, "Component" for specified torque.

Bolt symbol	Length mm (in)	Number of bolts
A	55 (2.17)	2
B	50 (1.97)	2
C	16 (0.63)	2

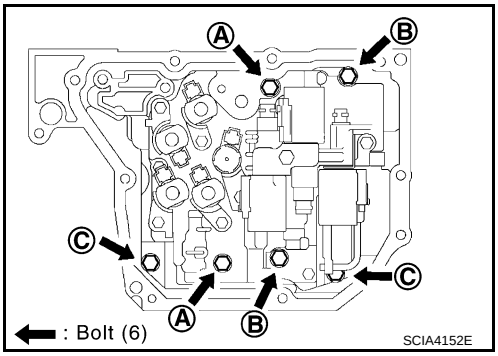

Transmission wire

INFOID:0000000001718098

REMOVAL

1. Remove PNP switch. Refer to AT-225, "Component".
2. Remove side cover. Refer to AT-222, "Side cover".

3. Disconnect solenoid valve connectors.
4. Remove transmission wire.

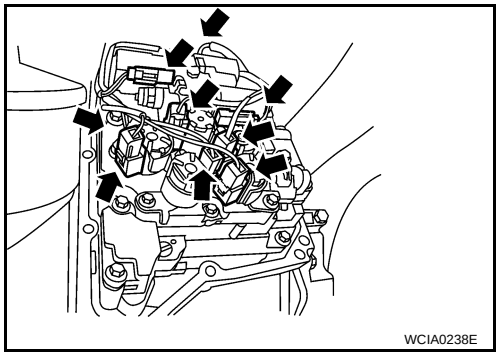

INSTALLATION

Installation is the reverse order of removal.

REMOVAL AND INSTALLATION

Removal

INFOID:0000000001718099

Remove the engine and transaxle assembly from the vehicle. Refer to EM-110.

Inspection After Removal

INFOID:0000000001718100

- Drive plate runout
  CAUTION:
  Do not allow any magnetic materials to contact the ring gear teeth.

  Maximum allowable runout: Refer to EM-131, "Inspection After Disassembly".

- If this runout is out of allowance, replace drive plate and ring gear.

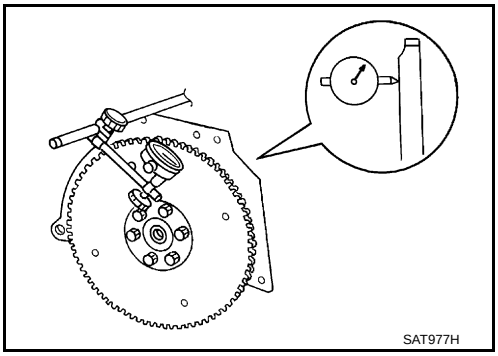

- When connecting torque converter to transaxle, measure distance "A" to be certain that they are correctly assembled.

  Distance "A" : 14 mm (0.55 in) or more

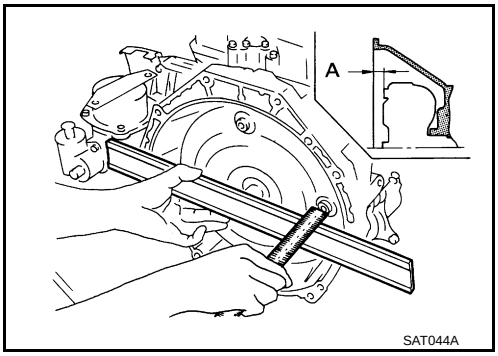

Installation

INFOID:0000000001718101

- Installation is in the reverse order of removal.
- When replacing the A/T assembly, initialize TCM. Refer to AT-7, "Precaution for A/T Assembly or TCM Replacement".
- Perform road test. Refer to AT-49, "Inspections Before Trouble Diagnosis".

OVERHAUL

Component

INFOID:0000000001718102

SEC.313・314・315・316

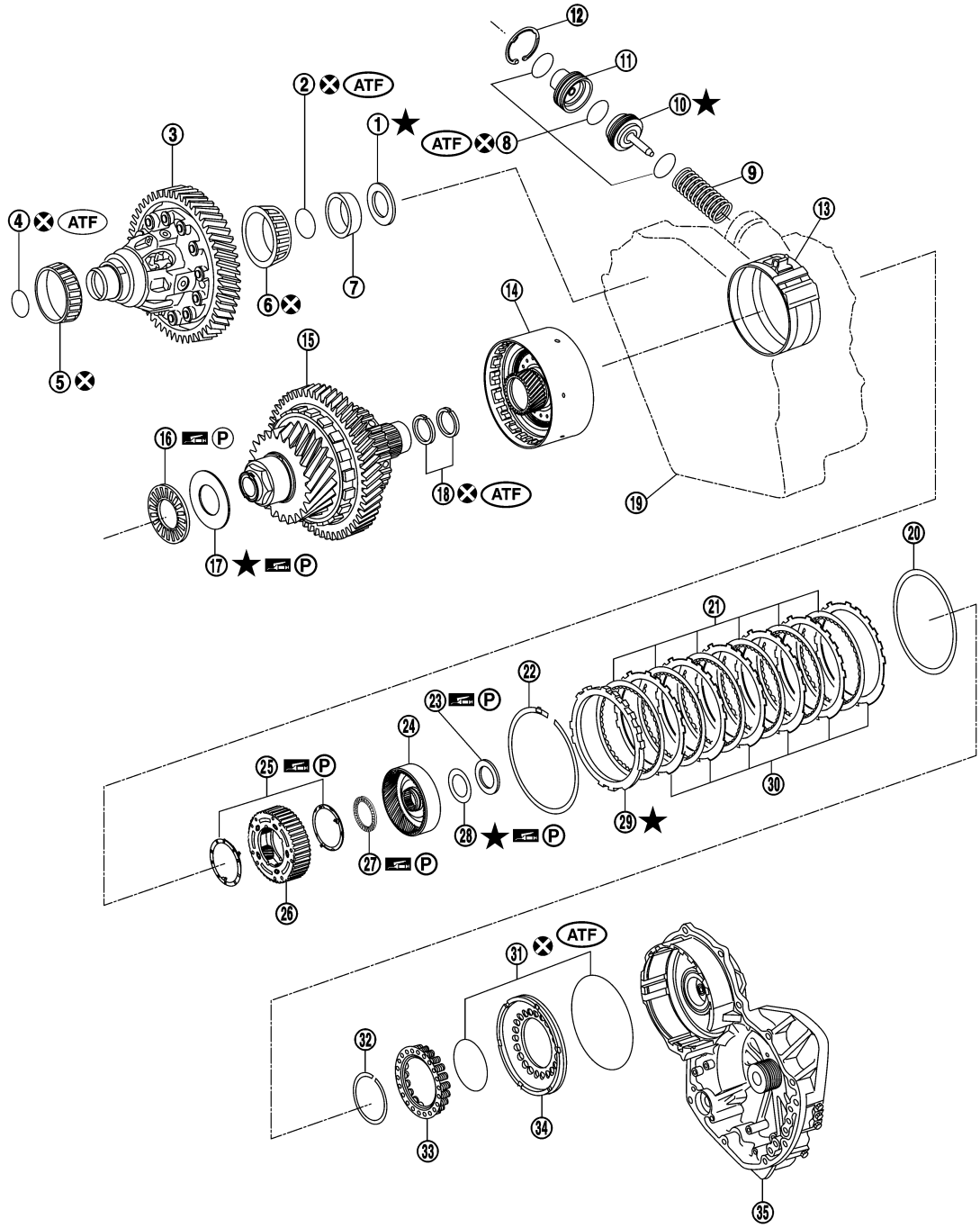

P : Apply petroleum jelly.
ATF : Apply ATF.
★ : Select with proper thickness.
⊗ : Always replace after every disassembly.

SCIA5433E

1. Adjust shim
2. O-ring
3. Differential gear assembly
4. O-ring
5. Tapered roller bearing
6. Tapered roller bearing
7. Outer race
8. O-ring
9. Compression spring

10. U/D brake piston assembly
11. U/D brake damper assembly
12. Snap ring
13. U/D brake band assembly
14. U/D clutch assembly
15. U/D gear assembly
16. Thrust needle roller bearing
17. Thrust bearing race
18. Seal ring
19. Transaxle case
20. B5 brake cushion plate
21. B5 brake disc
22. Snap ring
23. Thrust bearing race
24. U/D RR planetary ring gear sub assembly
25. Thrust bearing race
26. U/D RR planetary carrier assembly
27. Thrust needle roller bearing
28. Adjust shim
29. B5 brake flange
30. B5 brake plate
31. O-ring
32. Snap ring
33. Return spring
34. B5 brake piston
35. Transaxle case cover

SEC.313・314・315・316

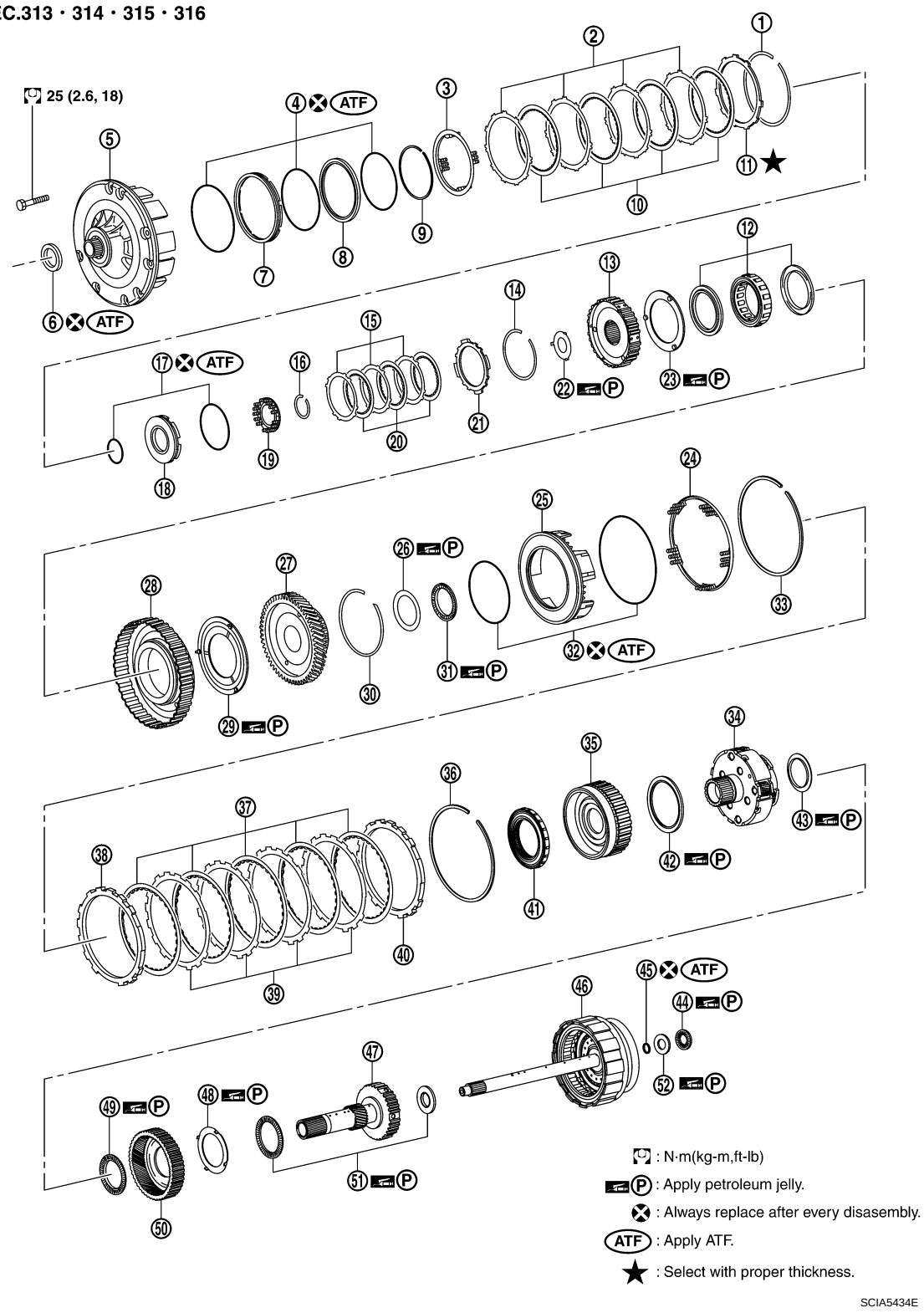

1. Snap ring	2. 2nd brake plate	3. Return spring
4. O-ring	5. Oil pump assembly	6. Oil seal
7. 2nd brake piston	8. 2nd brake sleeve	9. Snap ring
10. 2nd brake disc	11. 2nd brake flange	12. One-way clutch No.1
13. 2nd coast brake hub	14. Snap ring	15. 2nd coast brake plate
16. Snap ring	17. O-ring	18. 2nd coast brake piston
19. Return spring	20. 2nd coast brake disc	21. 2nd coast brake flange

22. Thrust washer
23. Thrust washer
24. Return spring
25. 1st and reverse brake piston
26. Thrust bearing race
27. Counter drive gear sub assembly
28. One-way clutch outer race sub assembly
29. Thrust washer
30. Snap ring
31. Thrust bearing
32. O-ring
33. Snap ring
34. Planetary gear assembly
35. FR planetary ring gear assembly
36. Snap ring
37. 1st and reverse brake disc
38. 1st and reverse brake flange
39. 1st and reverse brake plate
40. 1st and reverse brake flange
41. One-way clutch No.2
42. Thrust bearing
43. Thrust bearing race
44. Thrust needle roller bearing
45. Seal ring
46. Forward and direct clutch assembly
47. Planetary sun gear sub assembly
48. Thrust bearing race
49. Thrust needle roller bearing
50. RR planetary ring gear assembly
51. Thrust needle roller bearing
52. Thrust bearing race

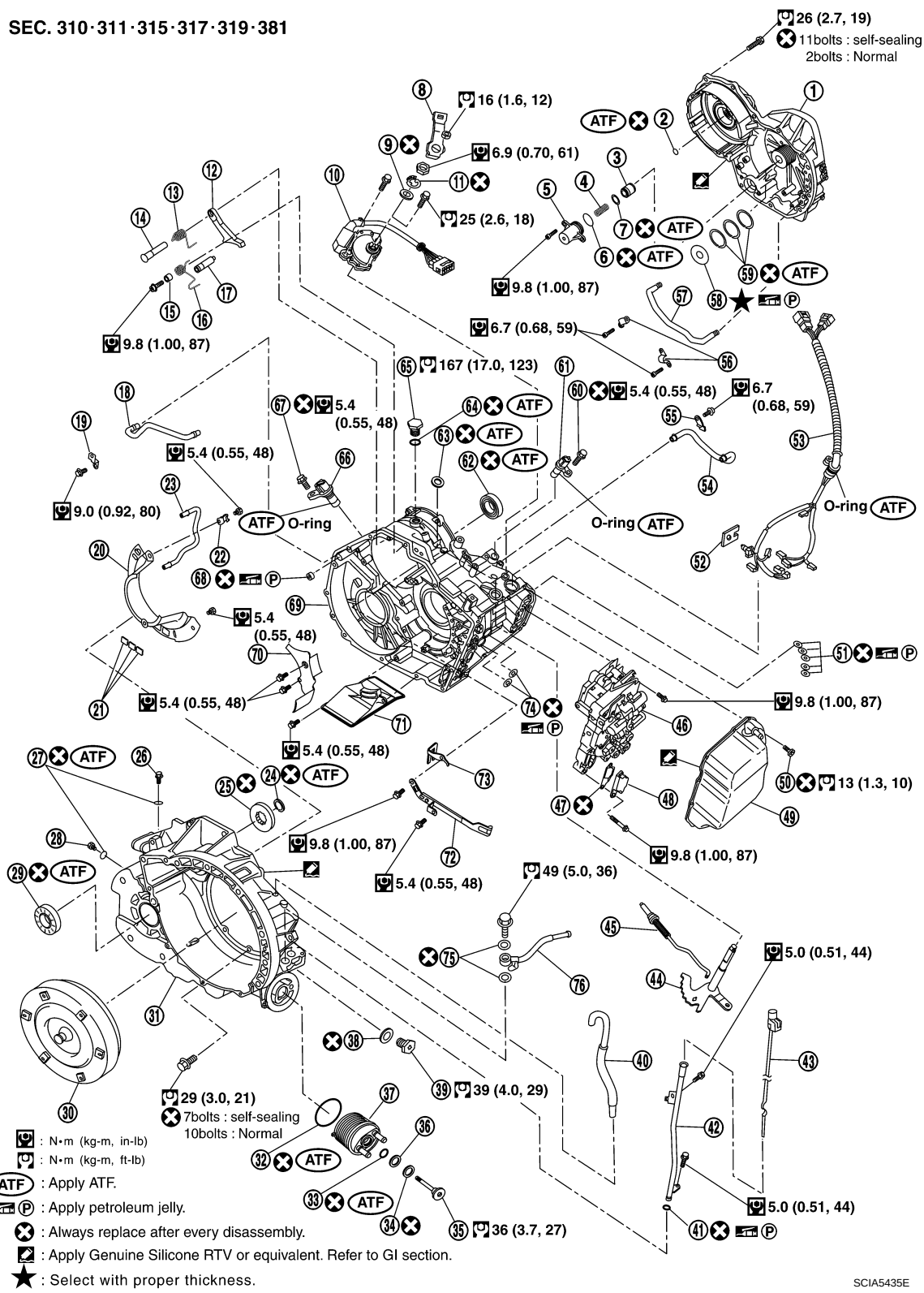

1. Transaxle case cover
2. Seal ring
3. Forward clutch accumulator piston
4. Compression spring
5. Accumulator cover
6. O-ring
7. Seal ring
8. Range lever
9. Washer plate
10. PNP switch
11. Lock washer
12. Parking lock pawl
13. Torsion spring No.1
14. Parking lock pawl shaft
15. Spring guide sleeve
16. Torsion spring No.2
17. Parking lockpin sub assembly
18. U/D brake apply tube sub assembly

19. Tube clamp
20. Oil reservoir plate
21. Oil cleaner magnet
22. Tube clamp
23. Differential gear lube apply tube
24. Seal ring
25. Thrust roller bearing
26. Straight screw plug
27. O-ring
28. Straight screw plug
29. Differential side oil seal
30. Torque converter
31. Transaxle housing
32. O-ring
33. O-ring
34. Spring washer
35. Hexagon bolt
36. Washer
37. ATF cooler assembly
38. gasket
39. Drain plug
40. Air breather hose
41. O-ring
42. A/T fluid charging pipe
43. A/T fluid level gauge
44. Manual valve lever sub assembly
45. Parking lock rod sub assembly
46. Control valve assembly
47. Suction cover gasket
48. Suction cover
49. Side cover
50. Seal bolt
51. Governor apply gasket
52. Sensor clamp
53. Transmission wire
54. Transaxle lube apply tube
55. Tube clamp
56. Tube clamp
57. U/D clutch apply tube sub assembly
58. Bearing race
59. Seal ring
60. Seal bolt
61. Turbine revolution sensor
62. Differential side oil seal
63. Manual valve oil seal
64. O-ring
65. Anchor bolt
66. Revolution sensor
67. Seal bolt
68. Governor apply gasket
69. Transaxle case
70. Oil reservoir plate
71. Oil strainer sub assembly
72. Manual detent spring sub assembly
73. Parking lock pawl bracket
74. Governor apply gasket
75. Copper washer
76. Fluid cooler tube

Location of Needle Bearings, Bearing Races and Thrust Washers

INFOID:0000000001718103

Outer and inner diameter of bearing races

Item number	Outer diameter mm (in)	Inner diameter mm (in)	Parts number*
A	57.70 (2.2716)	37.00 (1.4567)	31435 8Y020
B	77.60 (3.0551)	66.80 (2.6299)	31508 8Y010
C★	71.00 (2.7953)	49.10 (1.9331)	31435 8Y068
D★	41.00 (1.6142)	22.00 (0.8661)	31435 8Y060
E	41.00 (1.6142)	13.50 (0.5315)	31435 8Y011
F	74.00 (2.9134)	53.00 (2.0866)	31435 8Y001
G	61.00 (2.4016)	43.20 (1.7008)	31435 8Y002
H	58.00 (2.2835)	43.80 (1.7244)	31435 8Y022

Outer and inner diameter of thrust washers

Item number	Outer diameter mm (in)	Inner diameter mm (in)	Parts number*
Q	99.30 (3.9094)	56.50 (2.2244)	31508 8Y000
R	77.30 (3.0433)	56.50 (2.2244)	31508 8Y001
S	74.30 (2.9252)	47.00 (1.8504)	31508 8Y002

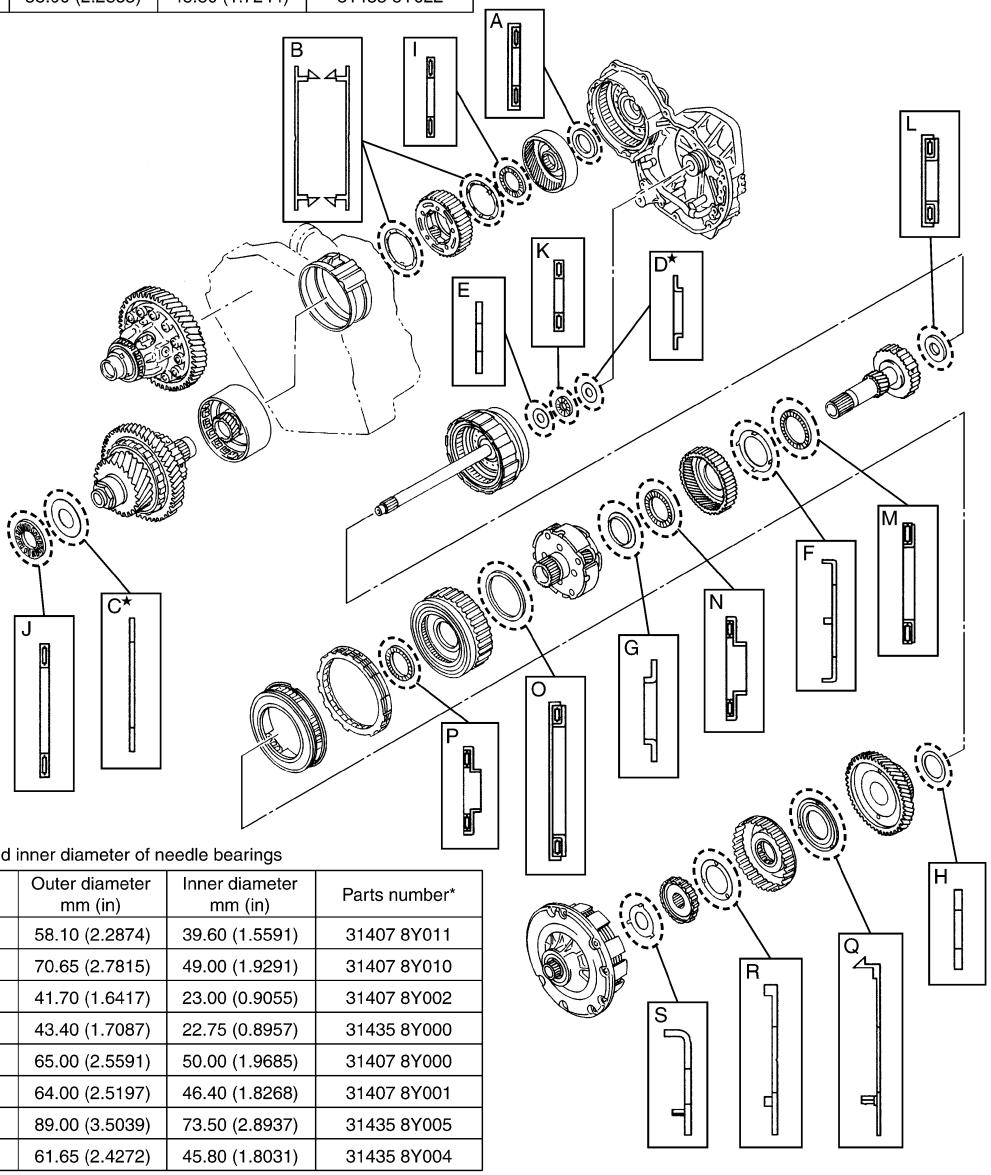

Outer and inner diameter of needle bearings

Item number	Outer diameter mm (in)	Inner diameter mm (in)	Parts number*
I	58.10 (2.2874)	39.60 (1.5591)	31407 8Y011
J	70.65 (2.7815)	49.00 (1.9291)	31407 8Y010
K	41.70 (1.6417)	23.00 (0.9055)	31407 8Y002
L	43.40 (1.7087)	22.75 (0.8957)	31435 8Y000
M	65.00 (2.5591)	50.00 (1.9685)	31407 8Y000
N	64.00 (2.5197)	46.40 (1.8268)	31407 8Y001
O	89.00 (3.5039)	73.50 (2.8937)	31435 8Y005
P	61.65 (2.4272)	45.80 (1.8031)	31435 8Y004

★ : Select with proper thickness.
* : Always check with the Parts Department for the latest parts information.

SCIA5436E

DISASSEMBLY

Disassembly

INFOID:0000000001718104

1. Drain ATF through drain plug.
2. Remove torque converter from transaxle case by holding it firmly and turning while pulling straight out.

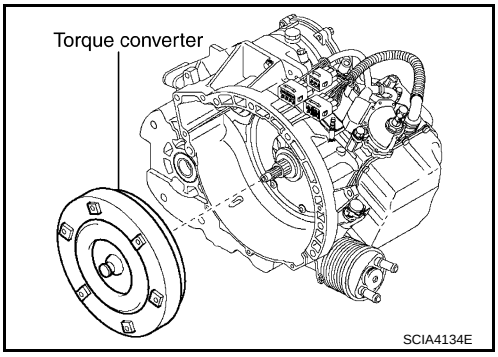

3. Remove A/T fluid level gauge.
4. Remove A/T fluid charging pipe.
5. Remove O-ring from A/T fluid charging pipe.
6. Remove air breather hose.
7. Remove fluid cooler tube.

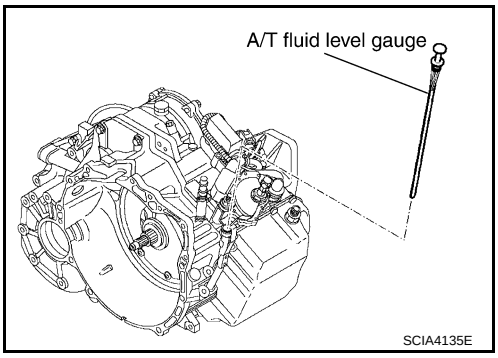

8. Remove turbine revolution sensor.
   CAUTION:
   Be careful not to damage the turbine revolution sensor and transaxle case.

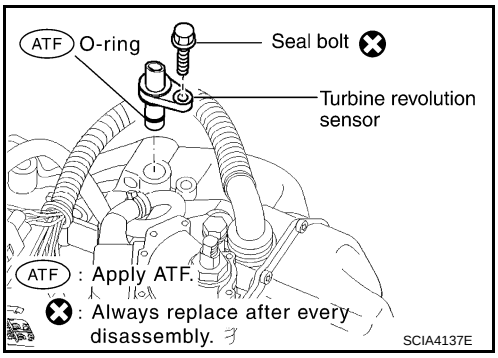

9. Remove revolution sensor.
   CAUTION:
   Be careful not to damage the revolution sensor and transaxle case.

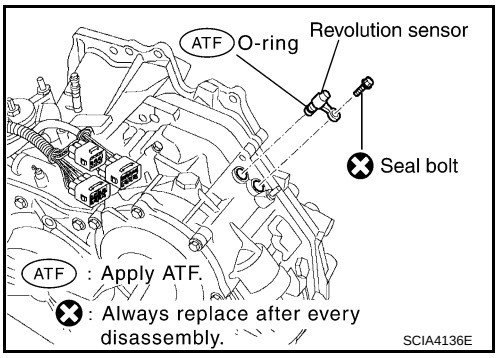

10. Remove nut and range lever.

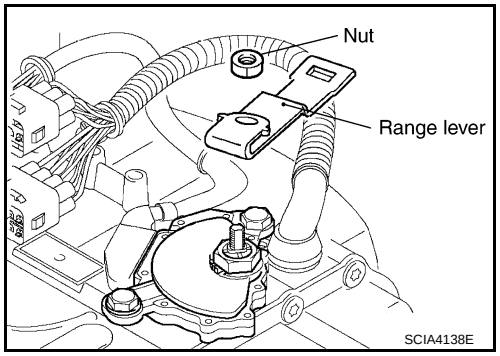

11. Pry off the lock washer using suitable tool.

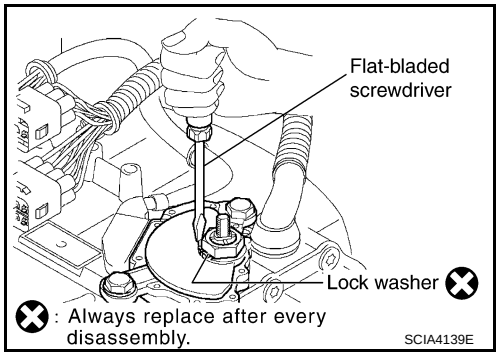

12. Loosen nut and remove lock washer.
13. Remove washer plate.

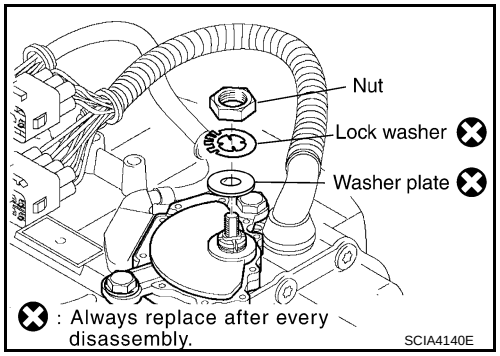

14. Remove PNP switch from transaxle case.

Bolt symbol	Length mm (in)	Number of bolts
A	20 (0.79)	1
B	33 (1.30)	1

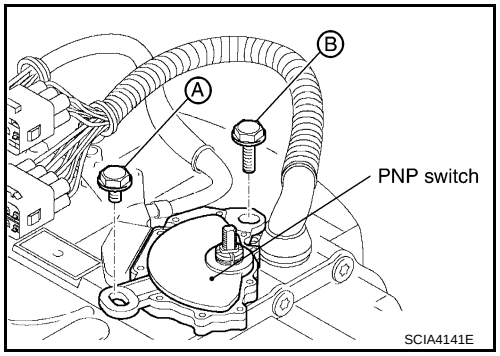

15. Remove hexagon bolt.
16. Remove ATF cooler assembly, washer and spring washer.
17. Remove O-rings from the ATF cooler assembly.

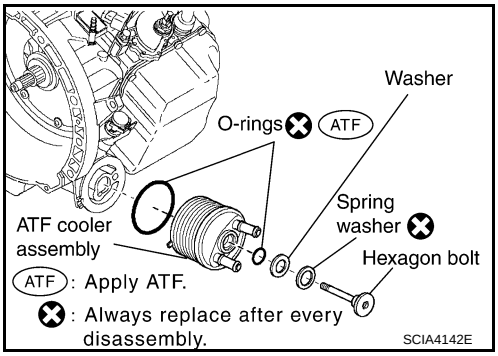

18. Remove side cover.
    CAUTION:
    Be careful not to damage side cover and transaxle case.

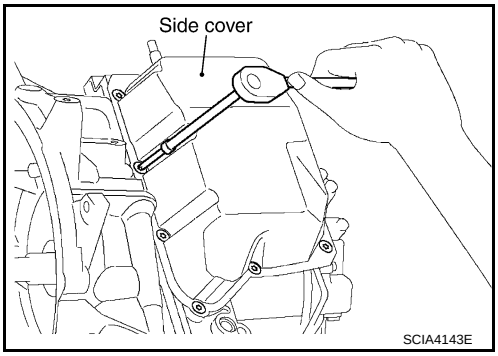

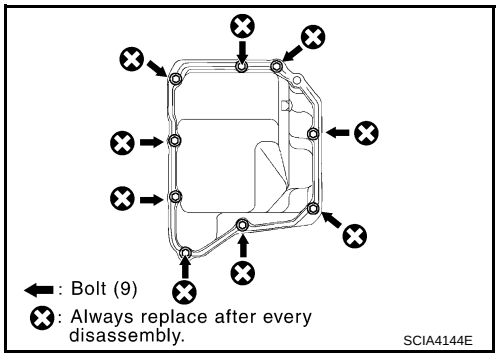

19. Disconnect solenoid connectors.
    CAUTION:
    Be careful not to damage connector.

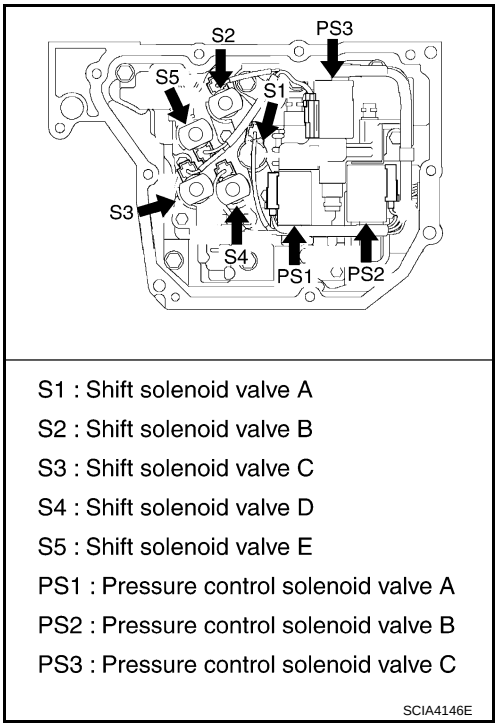

20. Remove sensor clamp bolt.

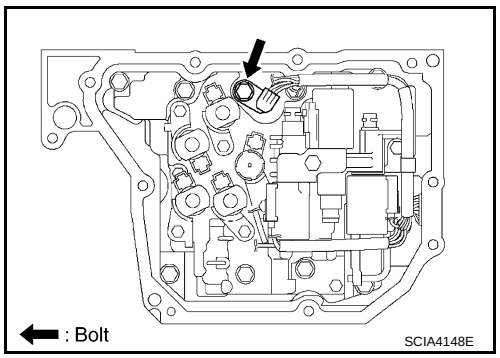

21. Remove sensor clamp and A/T fluid temperature sensor.
CAUTION:
Be careful not to damage A/T fluid temperature sensor.

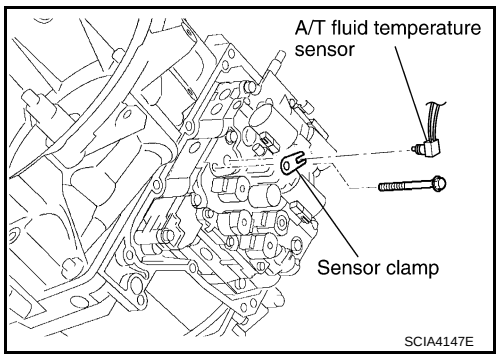

22. Remove suction cover bolts.

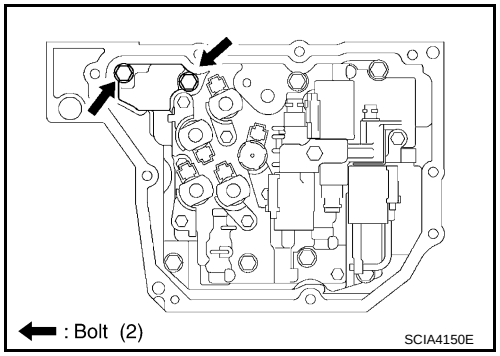

23. Remove suction cover and suction cover gasket.

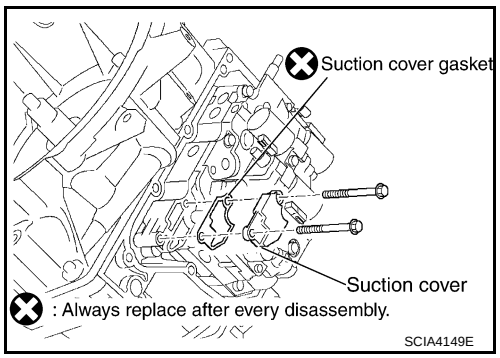

24. Remove control valve assembly bolts from transaxle case.

Bolt symbol	Length mm (in)	Number of bolts
A	55 (2.17)	2
B	50 (1.97)	2
C	16 (0.63)	2

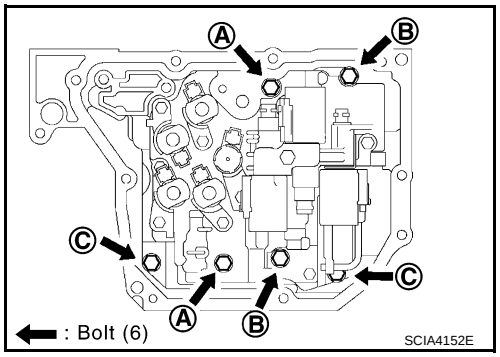

25. While holding control valve assembly, disconnect parking lock rod sub assembly from manual valve lever sub assembly and remove control valve assembly.
    NOTE:
    Shift position is “N”.

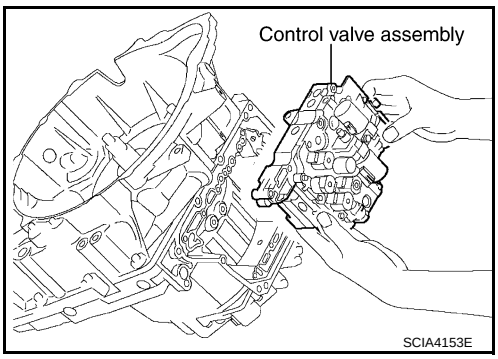

26. Remove governor apply gaskets.

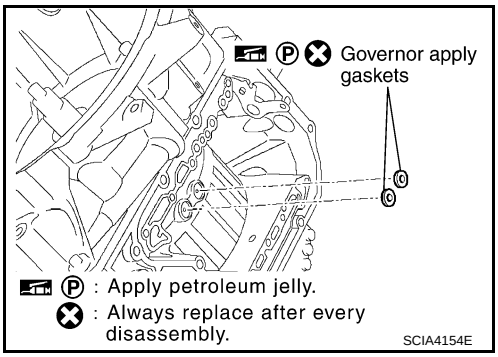

27. Remove transmission wire.
    CAUTION:
    Be careful not to damage solenoid connectors and A/T fluid temperature sensor.

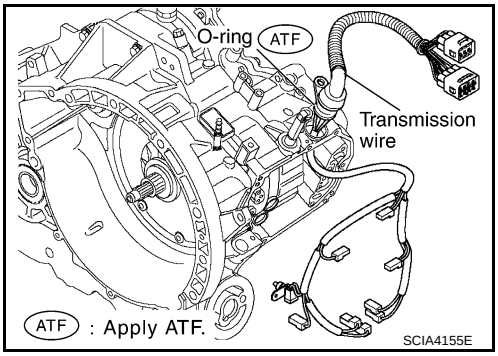

28. Remove oil pump assembly bolts from transaxle case.

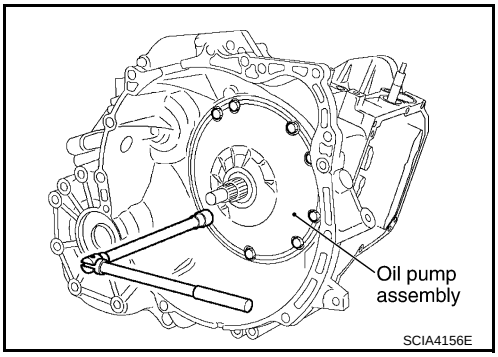

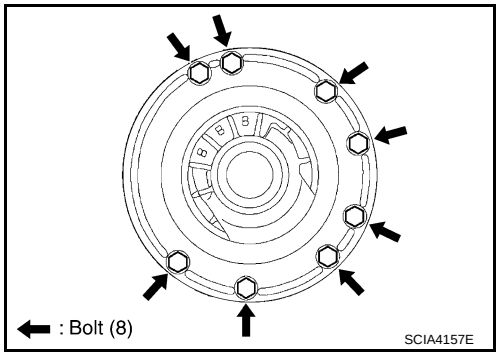

29. Remove oil pump assembly using Tools.

Tool numbers : ST33290001 (J-34286)

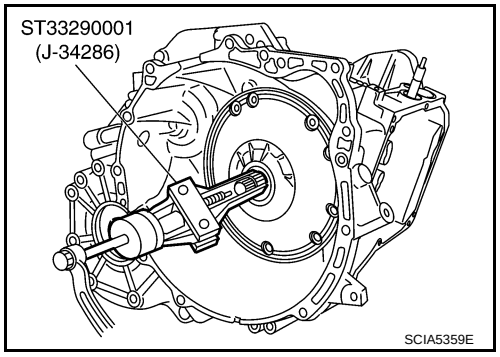

30. Remove oil seal from oil pump assembly using suitable tool.
CAUTION:
Be careful not to scratch oil pump assembly.

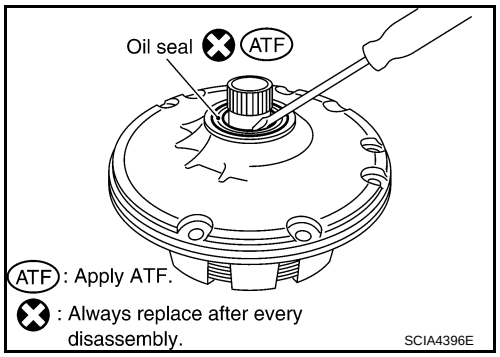

31. Remove one-way clutch outer race sub assembly.
32. Remove thrust washer.

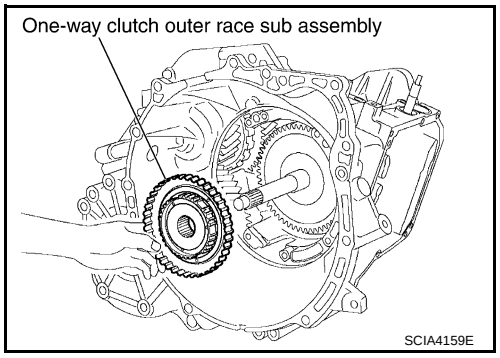

33. Remove transaxle housing bolts from transaxle case.

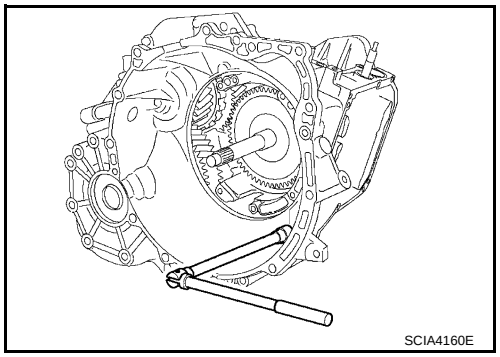

Bolt symbol	Length mm (in)	Number of bolts
A	30 (1.18)	13
B	35 (1.38)	2
C	45 (1.77)	1
D*	—	1

*:Torx bolt

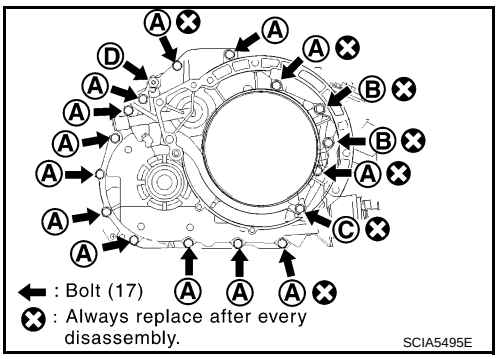

34. Remove transaxle housing using suitable tool.

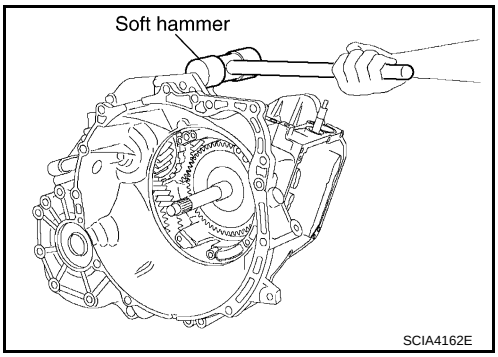

35. Remove governor apply gasket.
36. Remove seal ring.

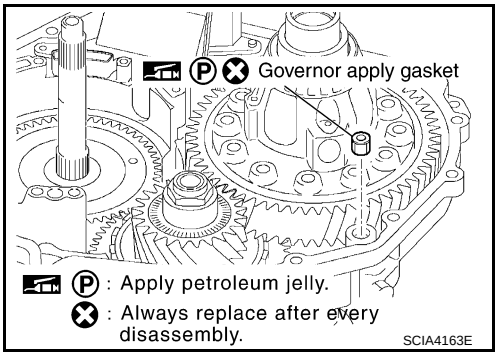

37. Remove tube clamp.

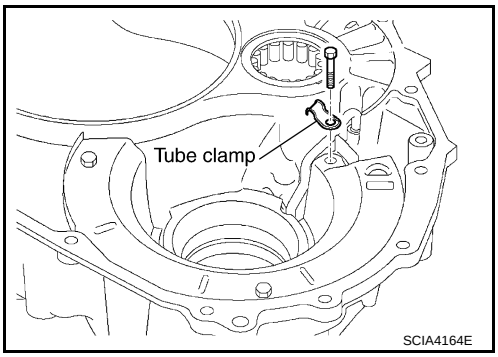

38. Remove differential gear lube apply tube using suitable tool.
CAUTION:
- **Be careful not to bend or damage differential gear lube apply tube.**
- **Be careful not to damage transaxle housing.**

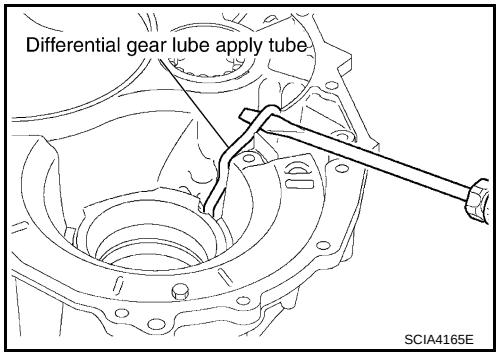

39. Remove oil reservoir plate.

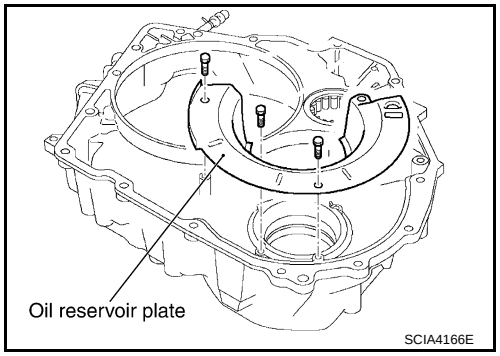

40. Remove oil cleaner magnets from oil reservoir plate.

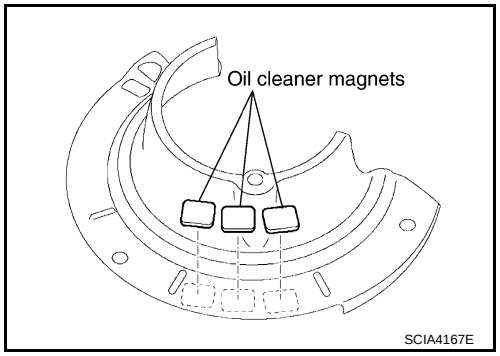

41. Remove differential gear assembly.

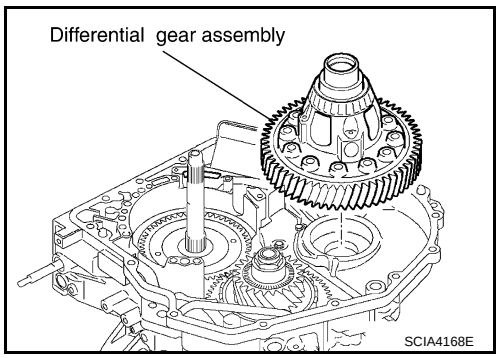

42. Remove oil strainer sub assembly.

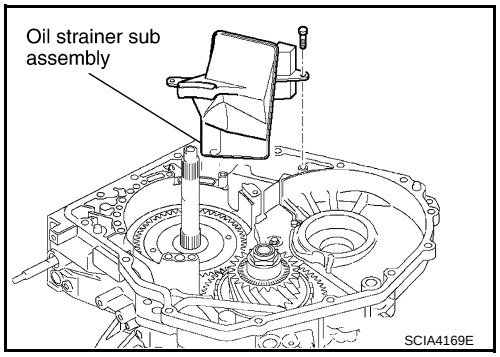

43. Remove oil reservoir plate.

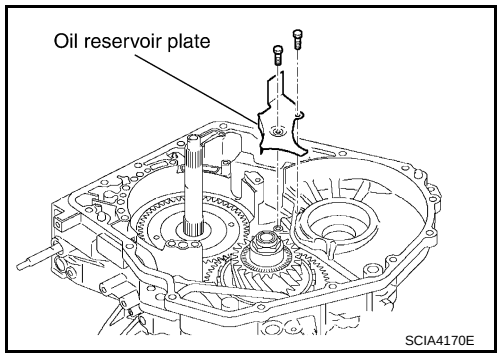

44. Remove tube clamp.

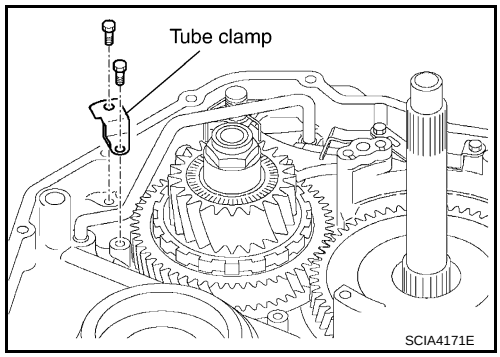

45. Remove U/D brake apply tube sub assembly using suitable tool.
CAUTION:
- **Be careful not to bend or damage U/D brake apply tube sub assembly.**
- **Be careful not to damage transaxle case.**

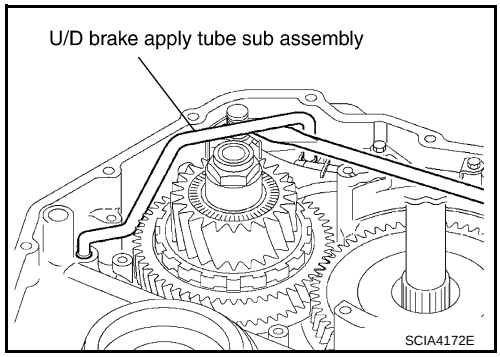

46. Disconnect manual detent spring sub assembly from manual valve lever sub assembly using suitable tool.

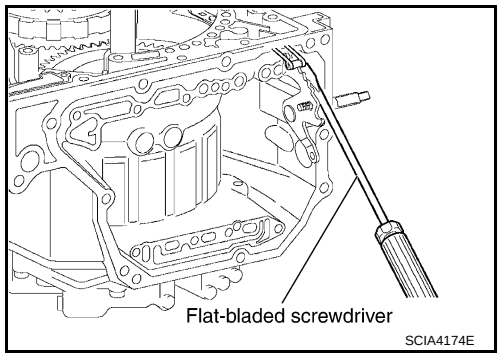

47. Remove manual valve lever sub assembly from parking lock rod sub assembly.

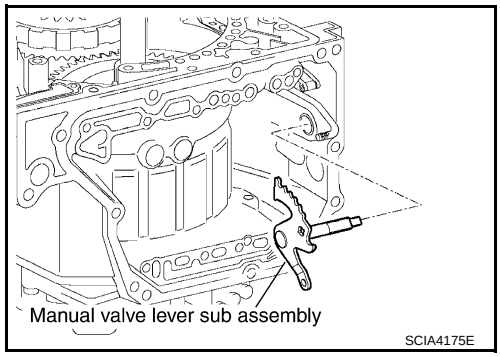

48. Remove parking lock rod sub assembly.

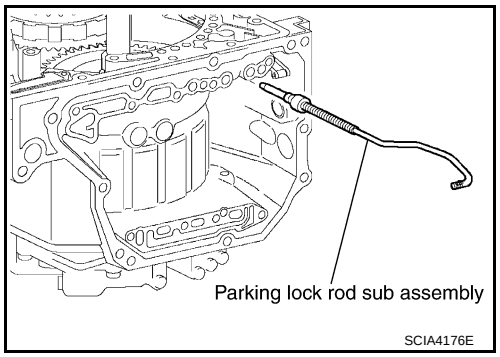

49. Remove bolts for manual detent spring sub assembly.

Bolt symbol	Length mm (in)	Number of bolts
A	16.7 (0.657)	1
B	14.0 (0.551)	1

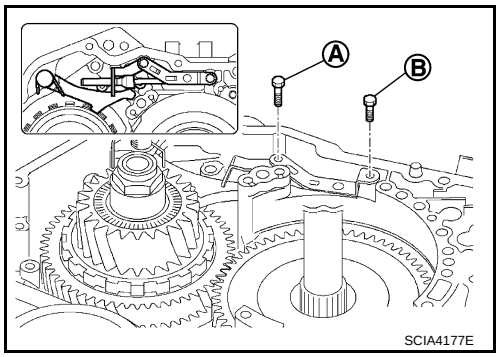

50. Remove manual detent spring sub assembly.

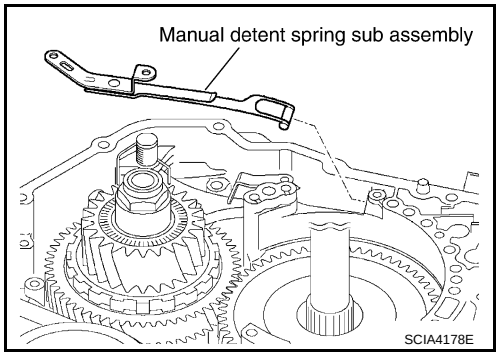

51. Remove parking lock pawl shaft and torsion spring No.1.

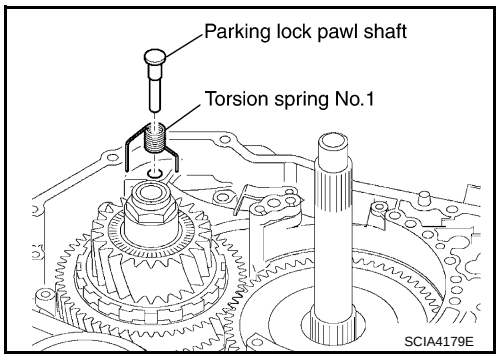

52. Remove parking lock pawl bracket and parking lock pawl.

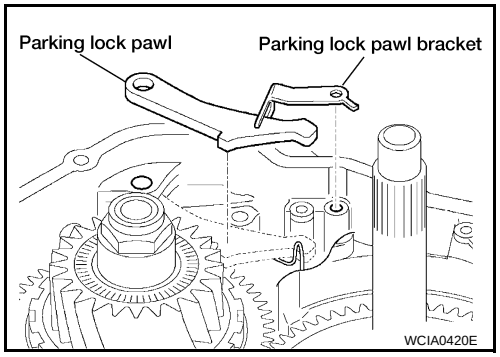

53. Remove parking lockpin sub assembly.

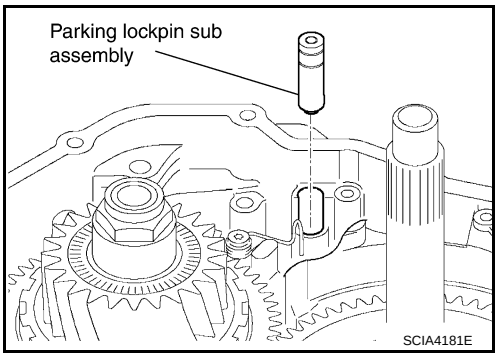

54. Remove spring guide sleeve and torsion spring No.2.

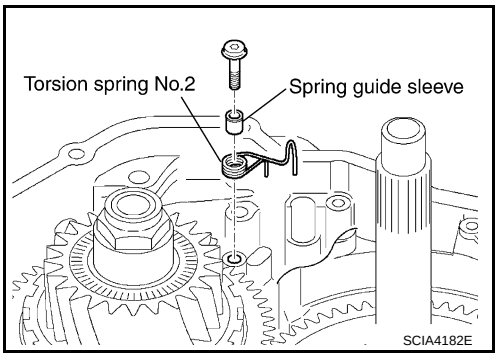

55. Remove manual valve oil seal using suitable tool.
CAUTION:
Be careful not to damage transaxle case.

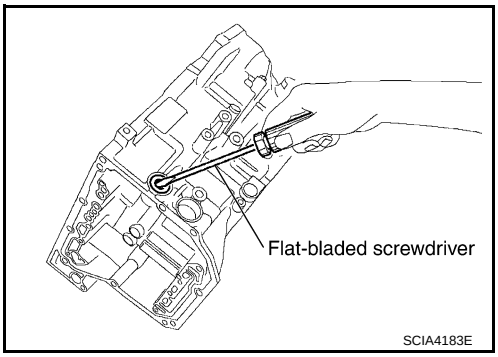

56. Remove thrust needle roller bearing and thrust bearing race from U/D gear assembly.

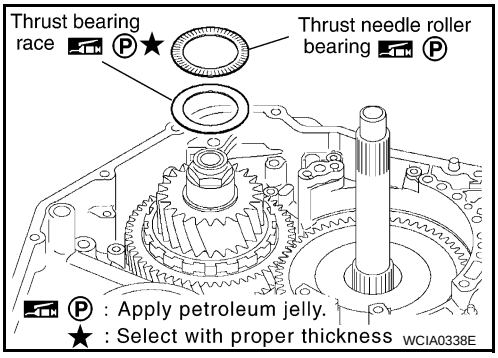

57. Remove U/D gear assembly.
58. Remove seal rings from U/D gear assembly.

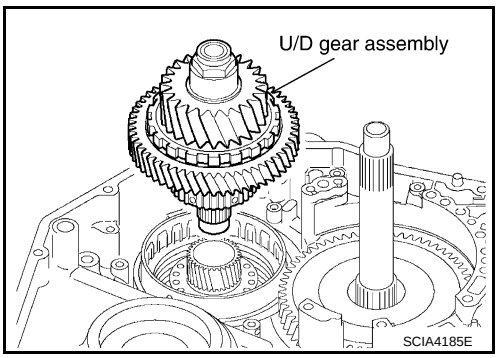

59. Remove U/D clutch assembly.

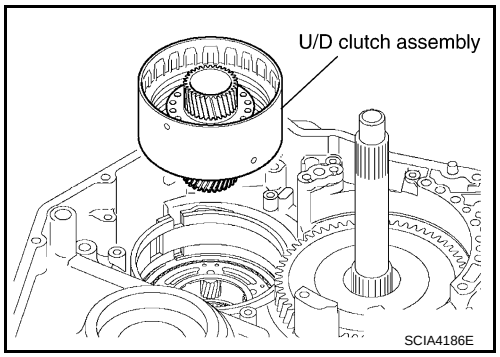

60. Remove anchor bolt.

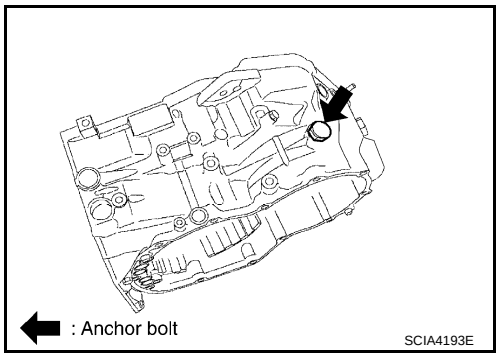

61. Remove U/D brake band assembly.
CAUTION:
Be careful not to damage transaxle case.

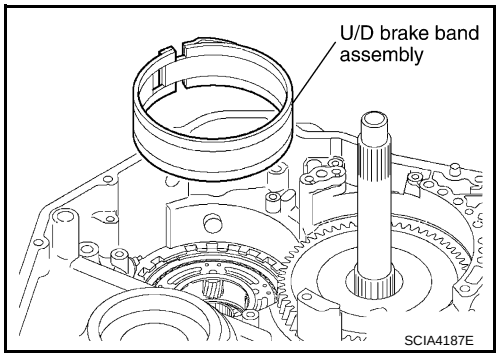

62. Remove U/D RR planetary carrier assembly and thrust bearing races.
63. Remove U/D RR planetary ring gear sub assembly.

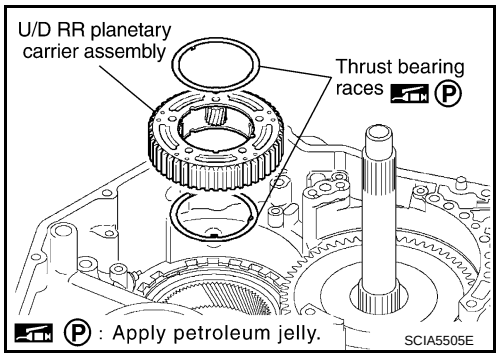

64. Remove thrust needle roller bearing, adjust shim and thrust bearing race from U/D RR planetary ring gear sub assembly.

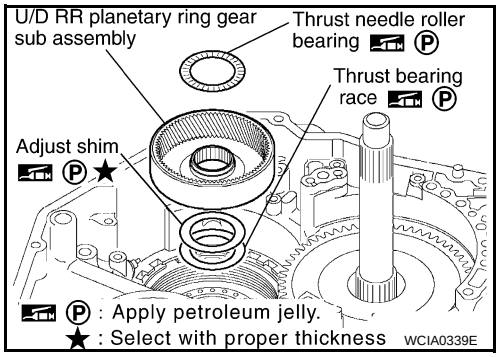

65. Remove snap ring using suitable tool.

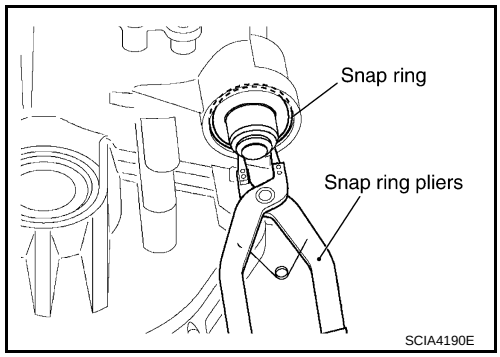

66. Remove U/D brake damper assembly.
67. Remove O-rings from U/D brake damper assembly.

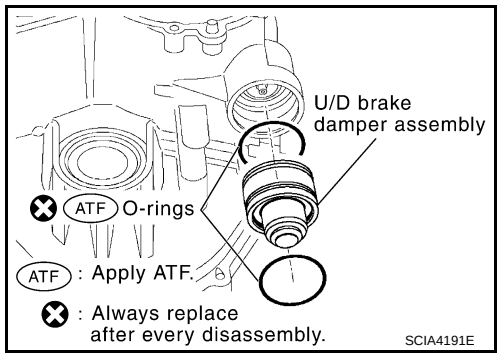

68. Remove U/D brake piston assembly and compression spring.
69. Remove O-ring from U/D brake piston assembly.

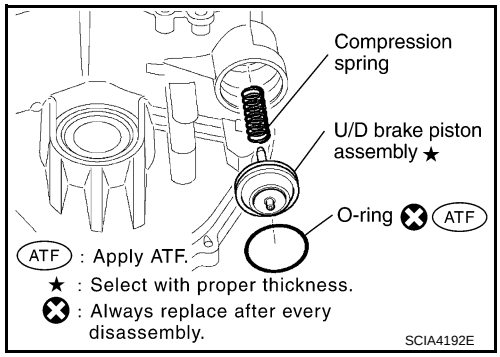

70. Remove transaxle case cover bolts from transaxle case.

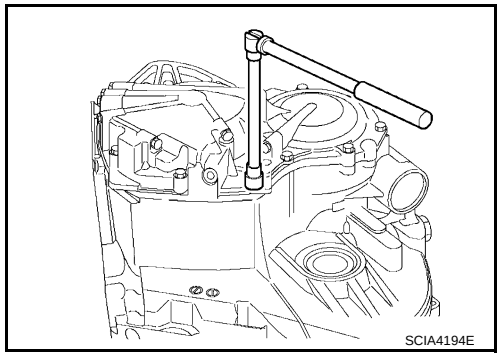

Bolt symbol	Length mm (in)	Number of bolts
A	30 (1.18)	8
B	45 (1.77)	2
C	48 (1.89)	2
D*	—	1

*:Stud bolt

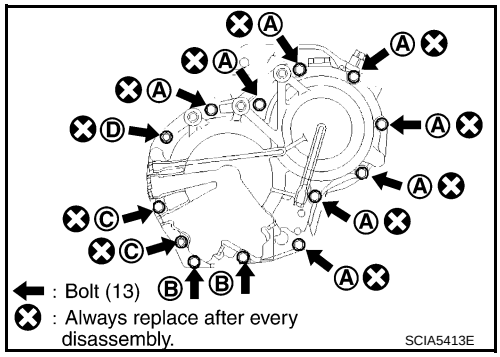

71. Tap transaxle case cover using suitable tool.
CAUTION:
Be careful not to damage transaxle case cover.

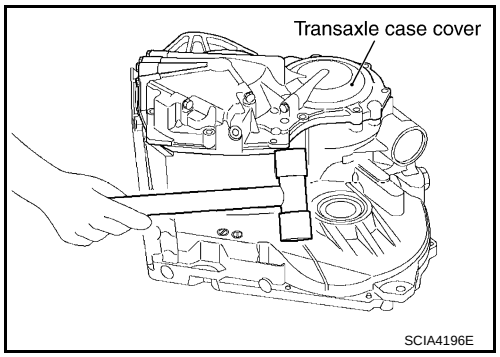

72. Remove transaxle case cover.

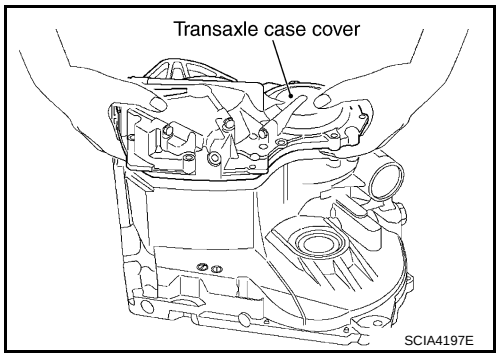

73. Remove governor apply gaskets from transaxle case.

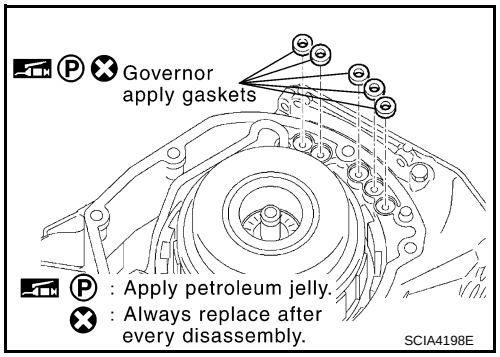

74. Remove tube clamp.

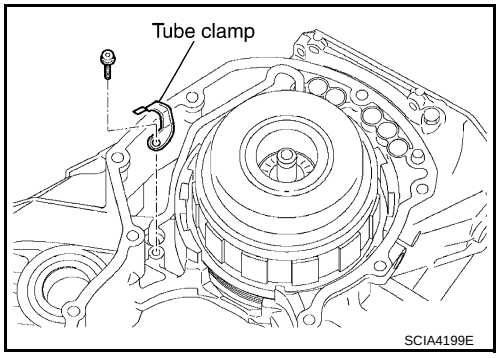

75. Remove transaxle lube apply tube using suitable tool.
CAUTION:
- **Be careful not to bend or damage transaxle lube apply tube.**
- **Be careful not to damage transaxle case.**

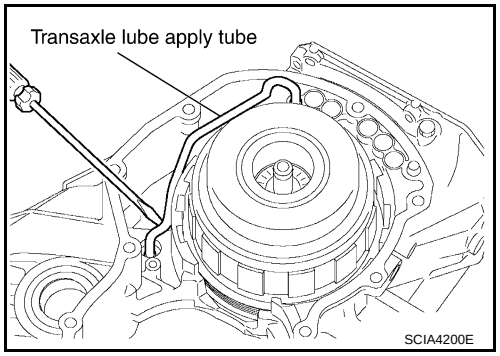

76. Remove forward and direct clutch assembly.
77. Remove thrust bearing race, thrust needle roller bearing and seal ring from forward and direct clutch assembly.

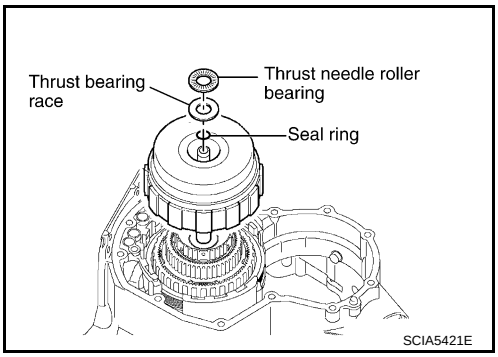

78. Remove planetary sun gear sub assembly and thrust needle roller bearings.

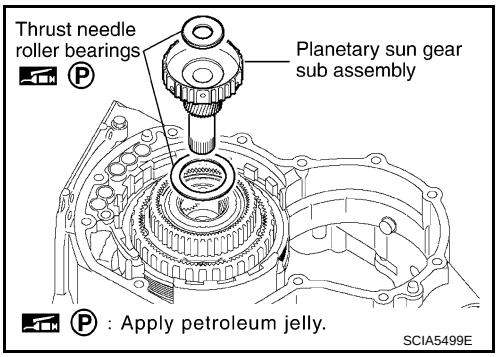

79. Using a bore gauge, measure the inner diameter of planetary sun gear sub assembly bushing.
CAUTION:
Measure at different places and take an average. If it is greater than the maximum, replace it with a new planetary sun gear sub assembly.

Standard	**:22.200 - 22.226mm (0.8740 - 0.8750in)**
Allowable limit	**:22.276 (0.8770in)**

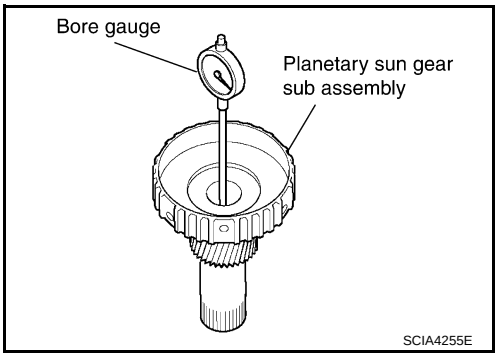

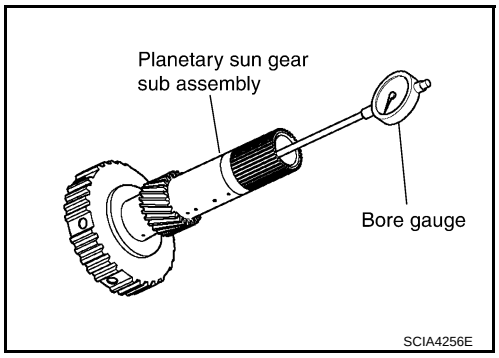

80. Remove RR planetary ring gear assembly.
81. Remove thrust needle roller bearing and thrust bearing race from RR planetary ring gear assembly.

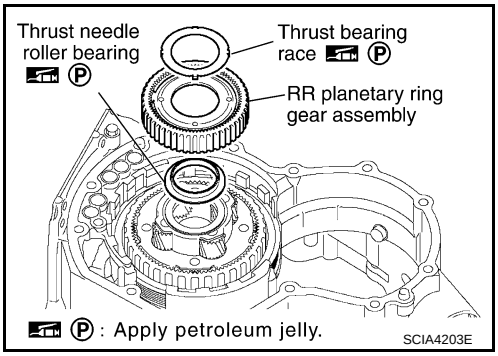

82. Remove planetary gear assembly.
83. Remove thrust bearing race from planetary gear assembly.

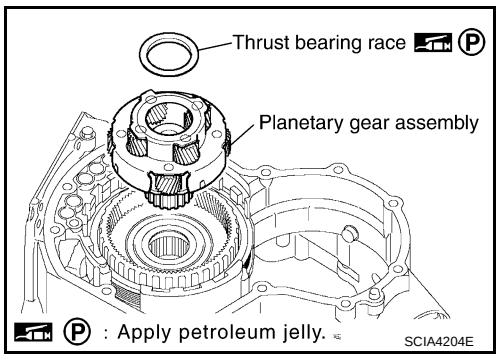

84. Using a bore gauge, measure the inner diameter of planetary gear assembly bushing.
CAUTION:
Measure at different places and take an average. If it is greater than the maximum, replace it with a new planetary gear assembly.

Standard	**:30.056 - 30.082mm (1.1833 - 1.1843in)**
Allowable limit	**:30.132 (1.1863in)**

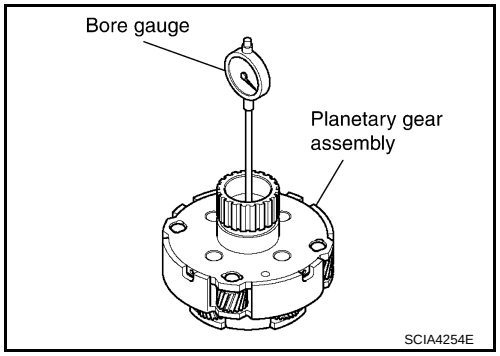

85. Remove thrust bearing.

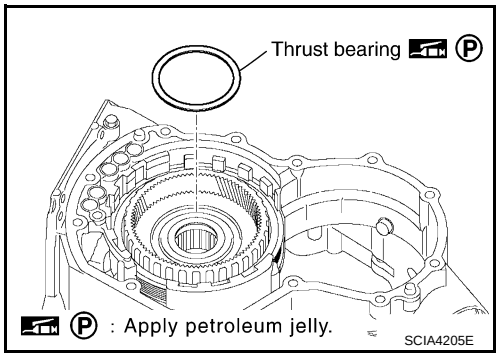

86. Remove snap ring using suitable tool.

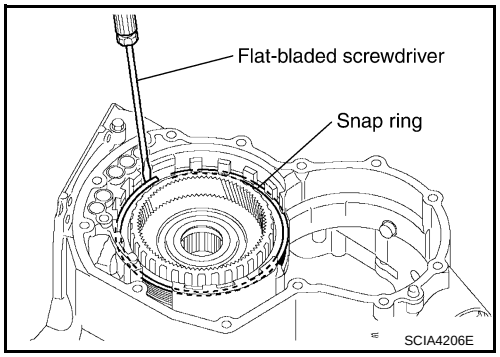

87. Remove 1st and reverse brake flanges, 1st and reverse brake discs and 1st and reverse brake plates.
- INSPECTION
  - Check that the sliding surface of discs are not worn and burnt. If necessary, replace them.

CAUTION:
Replace new discs by soaking them at least 2 hours in A/T fluid.

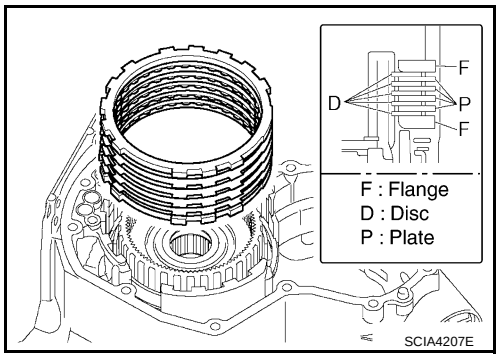

88. Remove FR planetary ring gear assembly with one-way clutch No.2.

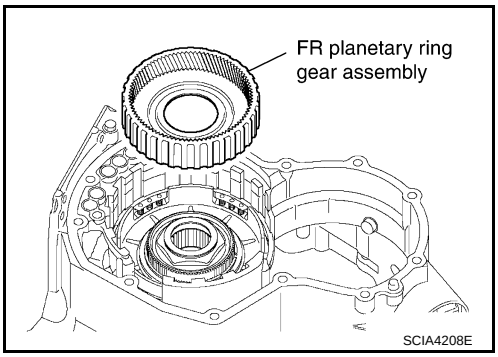

89. Make sure that the FR planetary ring gear assembly turns freely counterclockwise and locks clockwise.

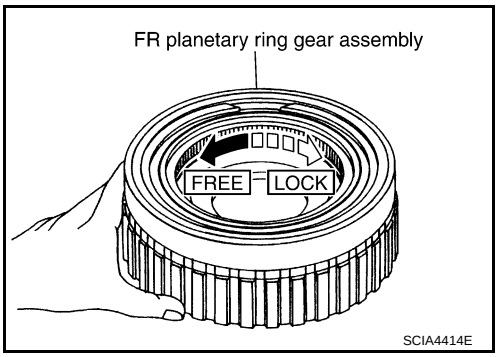

90. Remove snap ring using suitable tool.

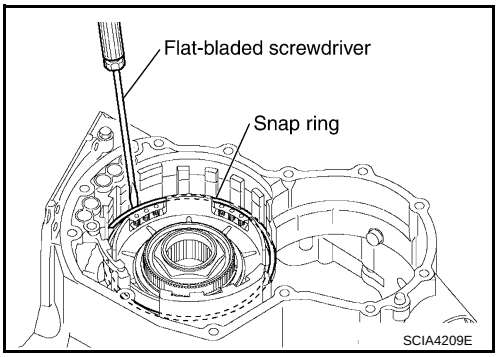

91. Remove return spring.

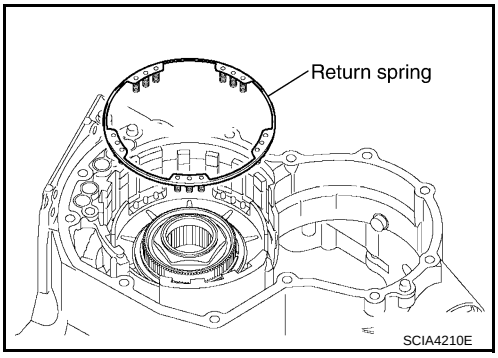

92. While pushing the piston by hand, apply compressed air (4Kg/cm^2) into the oil passage of transaxle case as shown and remove 1st and reverse brake piston.

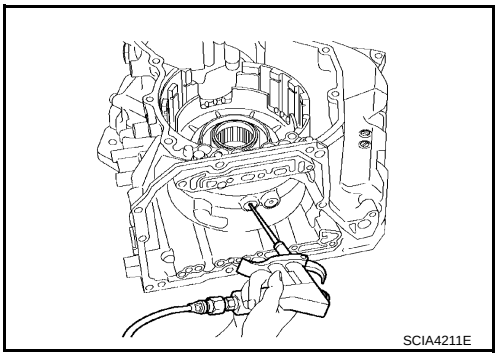

93. Remove O-rings from 1st and reverse brake piston.

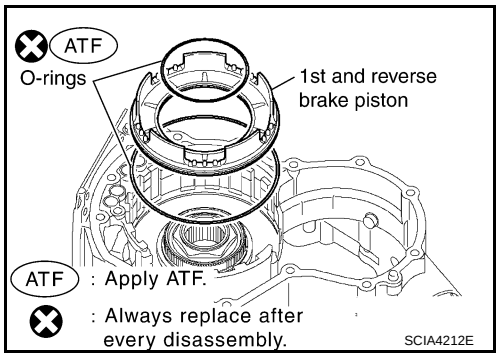

94. Remove thrust bearing and thrust bearing race from counter drive gear sub assembly.

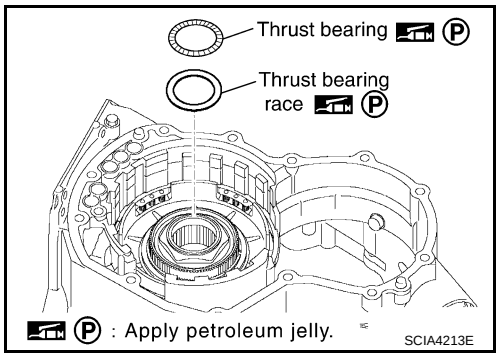

95. Remove snap ring using suitable tool.

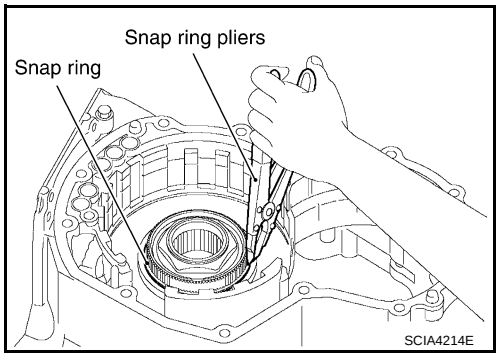

96. Remove counter drive gear sub assembly.

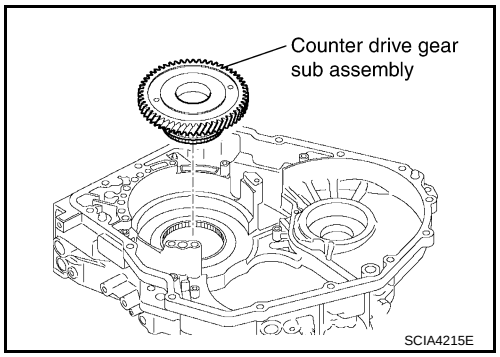

97. Remove differential side oil seal from transaxle case and transaxle housing using suitable tool.

CAUTION:

Be careful not to scratch transaxle case and transaxle housing.

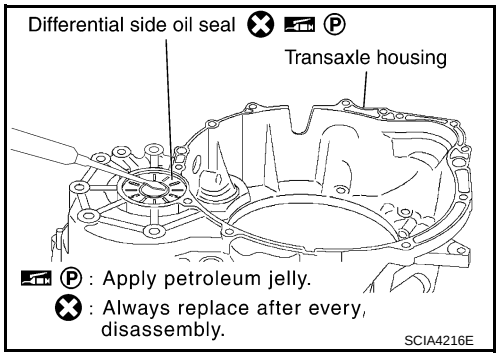

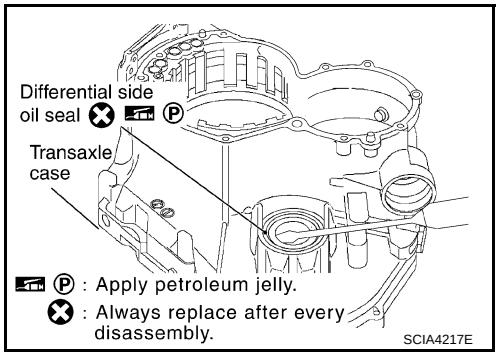

98. Remove outer race and adjust shim from transaxle case.

Tool number : ST30612000 (J-25742-2)

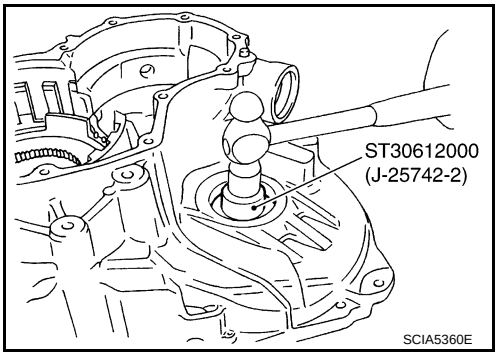

99. Remove thrust roller bearing from transaxle housing.

Tool number : ST33290001 (J-34286)

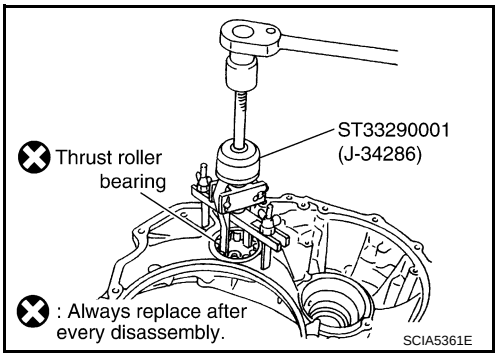

REPAIR FOR COMPONENT PARTS

Oil Pump, 2nd Coast Brake & 2nd Brake

INFOID:0000000001718105

COMPONENTS

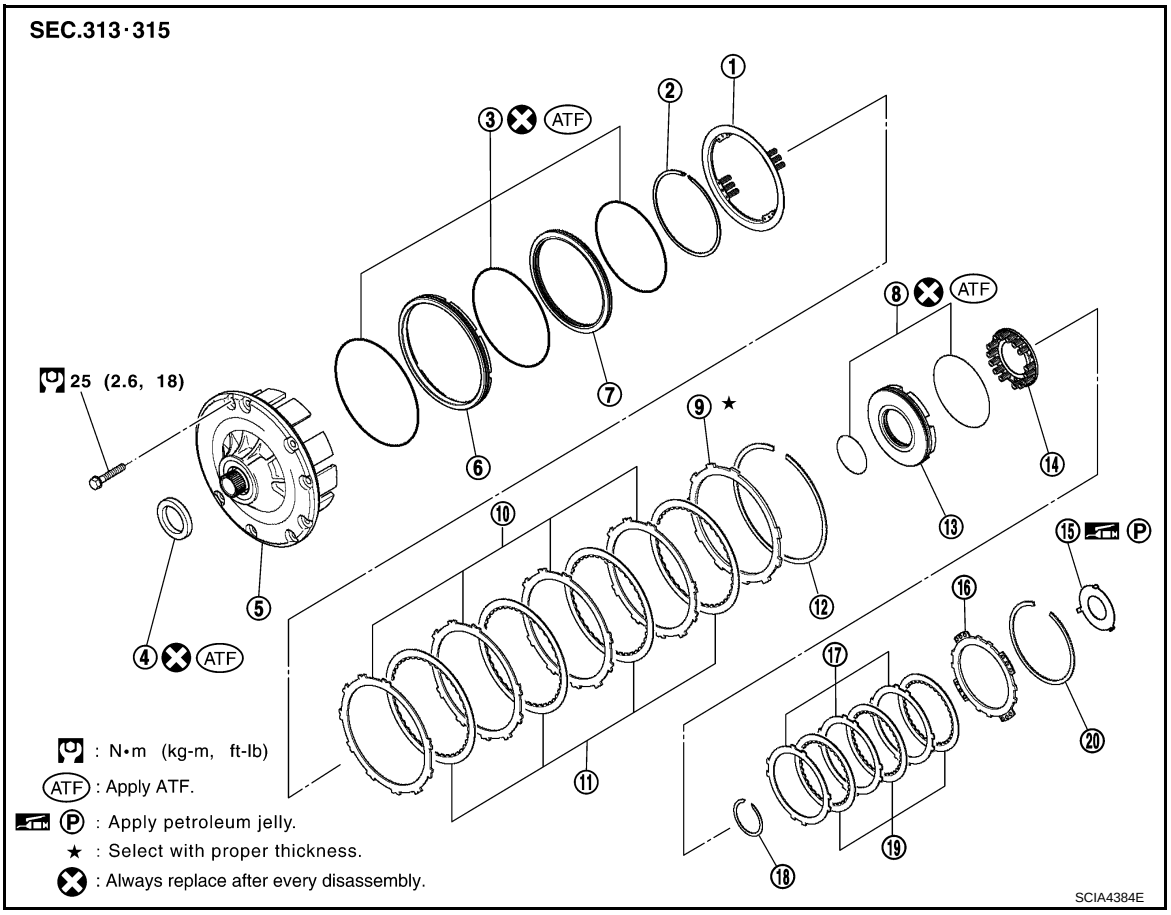

1. Return spring	2. Snap ring	3. O-ring
4. Oil seal	5. Oil pump assembly	6. 2nd brake piston
7. 2nd brake sleeve	8. O-ring	9. 2nd brake flange
10. 2nd brake plate	11. 2nd brake disc	12. Snap ring
13. 2nd coast brake piston	14. Return spring	15. Thrust washer
16. 2nd coast brake flange	17. 2nd coast brake plate	18. Snap ring
19. 2nd coast brake disc	20. Snap ring	

DISASSEMBLY

1. Remove oil seal from oil pump assembly using suitable tool.
   CAUTION:
   Be careful not to scratch oil pump assembly.

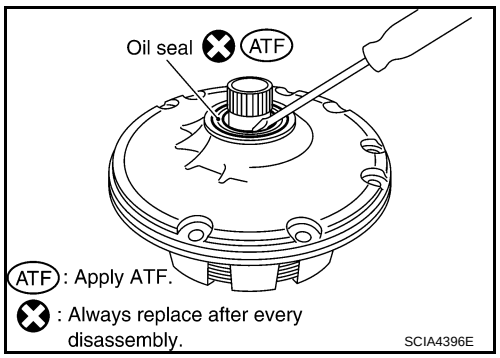

2. Remove thrust washer from oil pump assembly.

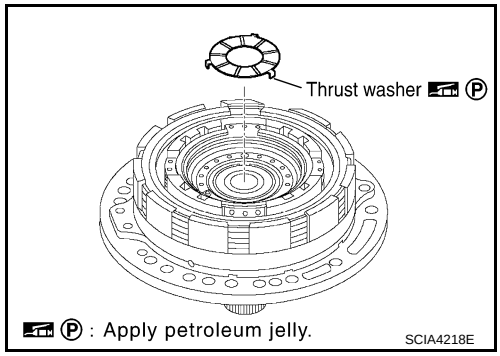

3. Remove snap ring using suitable tool.

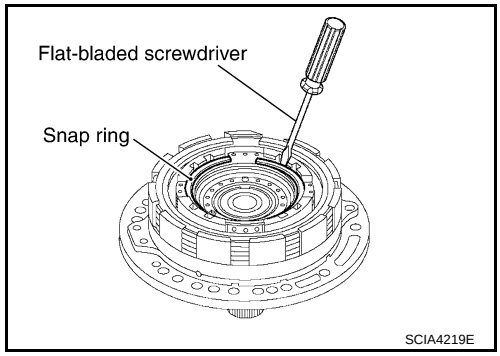

4. Remove 2nd coast brake flange, 2nd coast brake discs and 2nd coast brake plates.

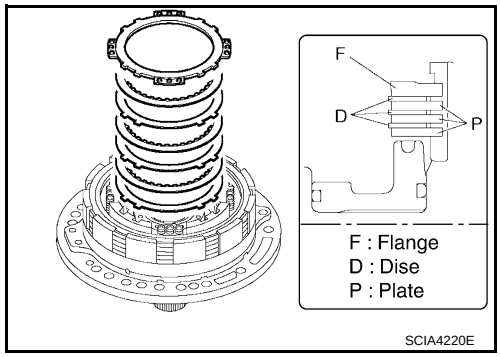

5. Place Tool on return spring, and compress return spring with a press.

Tool number : KV31102400 (J-34285 and J-34285-87)

6. Remove snap ring using suitable tool.

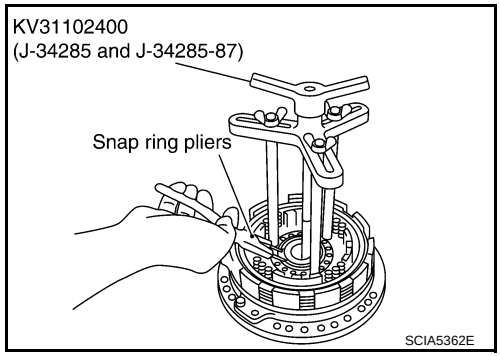

7. Remove return spring.

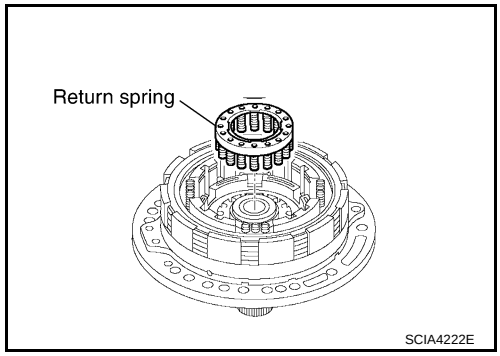

8. While pushing the 2nd coast brake piston by hand, apply compressed air (4kg/cm^2) into the oil passage as shown and remove 2nd coast brake piston.
   CAUTION:
   Be careful not to damage the O-ring and 2nd coast brake piston.
9. Remove O-rings from 2nd coast brake piston.

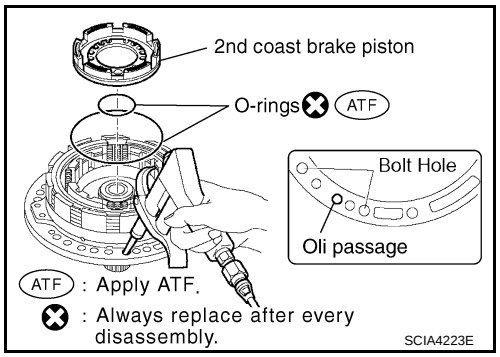

10. Remove snap ring using suitable tool.

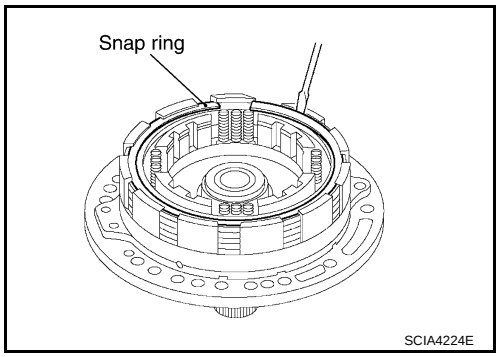

11. Remove 2nd brake flange, 2nd brake discs and 2nd brake plates.

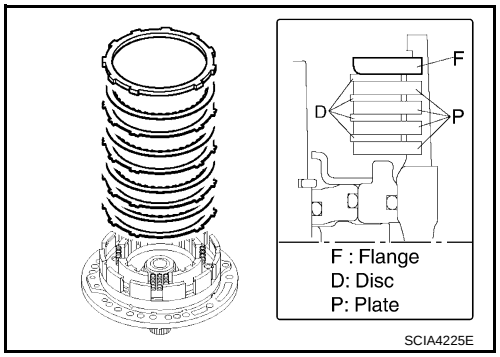

12. Remove return spring.

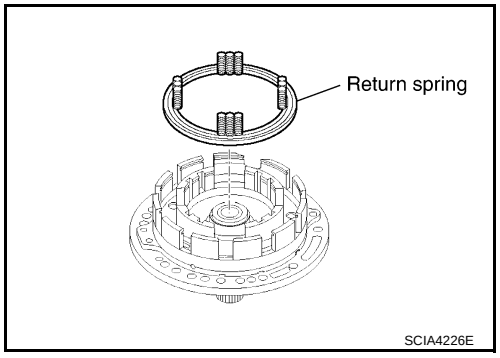

13. Remove snap ring using suitable tool.
    CAUTION:
    Be careful not to damage oil pump assembly and 2nd brake piston.

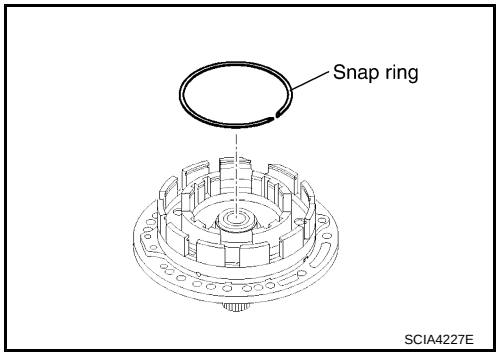

14. While pushing the 2nd brake piston by hand, apply compressed air (4kg/cm^2) into the oil passage as shown and remove 2nd brake piston (With 2nd brake sleeve).
    CAUTION:
    Be careful not to damage 2nd brake piston and 2nd brake sleeve.
15. Remove O-rings from 2nd brake piston and 2nd brake sleeve.

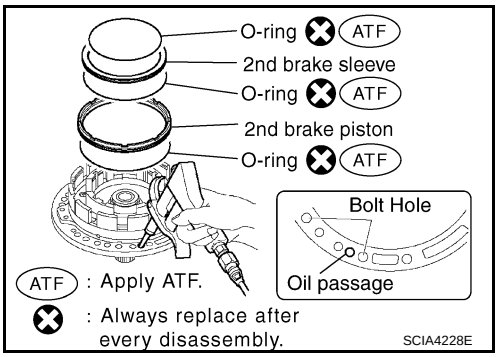

INSPECTION

- Check that the sliding surface of discs and plates is not worn or burnt. If the discs or plates is worn or burnt, replace it
  CAUTION:
  Replace new clutch discs by soaking them at least 2 hours in ATF.

ASSEMBLY

1. Install O-rings in 2nd brake sleeve and 2nd brake piston.
   CAUTION:
   - **Do not reuse O-ring.**
   - **Apply ATF to O-ring.**
2. Coat the inner surfaces of oil pump assembly with ATF.
3. Press 2nd brake piston and 2nd brake sleeve into oil pump assembly.

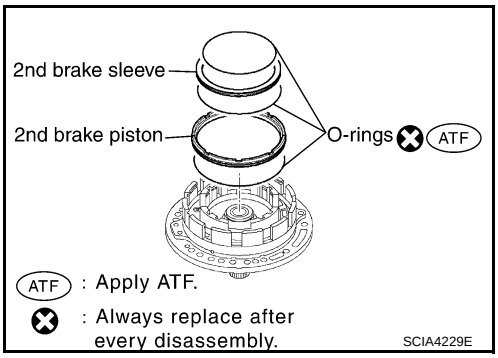

4. Install snap ring using suitable tool.
   CAUTION:
   Be careful not to damage oil pump assembly.

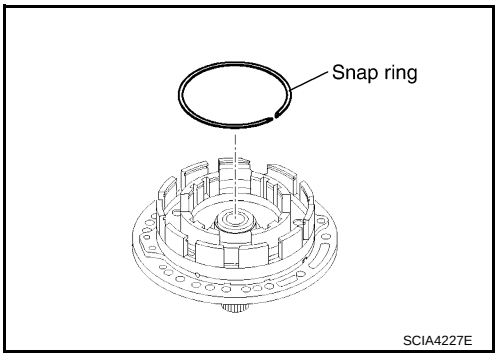

5. Place return spring on 2nd brake piston with the spring side up.

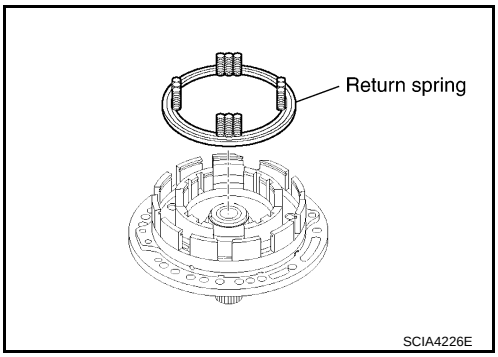

6. Install 2nd brake flange, 2nd brake discs and 2nd brake plates.

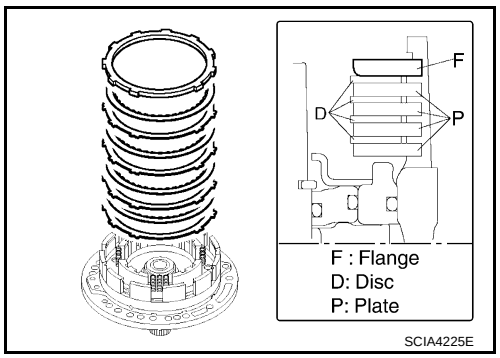

7. Install snap ring using suitable tool.

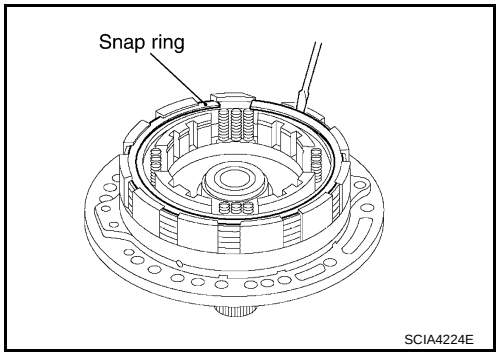

8. Install O-rings in 2nd coast brake piston.
   CAUTION:
   - **Do not reuse O-rings.**
   - **Apply ATF to O-rings.**
9. Coat the inner surfaces of oil pump assembly with ATF.
10. Press 2nd coast brake piston into oil pump assembly.

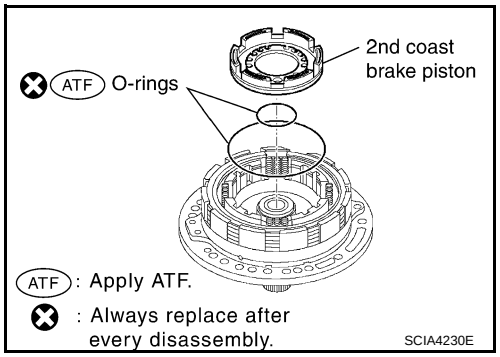

11. Install return spring.

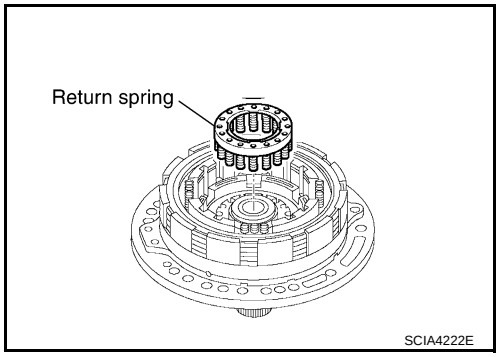

12. Place Tool on return spring, and compress return spring with a press.

    Tool number : KV31102400 (J-34285 and J-34285-87)

13. Install snap ring using suitable tool.

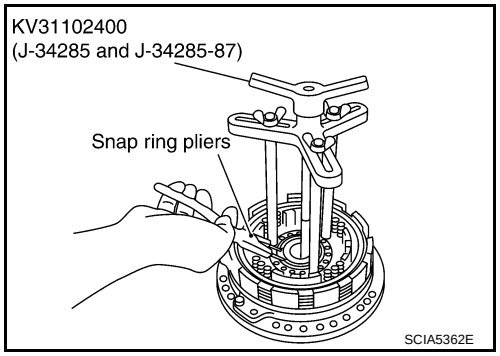

14. Install 2nd coast brake flange, 2nd coast brake discs and 2nd coast brake plates.

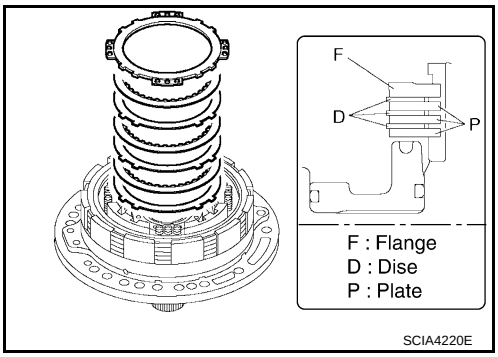

15. Place clutch spring compressor on 2nd coast brake flange, and compress return spring with a press.

Tool number : KV31102400 (J-34285 and J-34285-87)

16. Install snap ring using suitable tool.

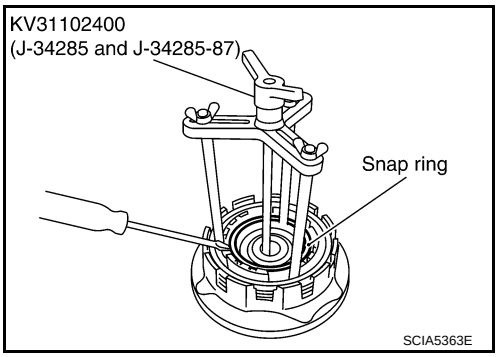

17. Set a dial indicator as shown.
18. When applying compressed air (4Kg/cm^2) into the oil passage as shown, measure 2nd brake piston stroke and check 2nd brake piston moves smoothly.

Piston stroke :1.10 - 1.50mm (0.0433 - 0.0591in)

If 2nd brake piston stroke is out standards, select another flange. Refer to AT-294, "Clutch, Gear and Brakes".

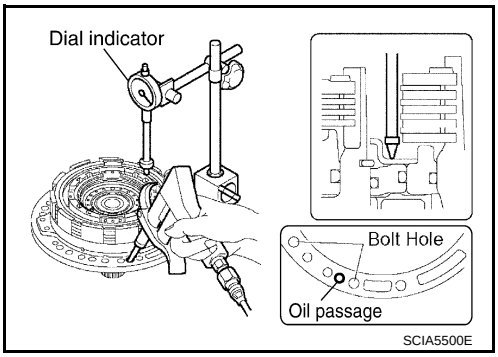

19. Set a dial indicator as shown.
20. When applying compressed air (4Kg/cm^2) into the oil passage as shown, measure 2nd coast brake piston stroke and check 2nd coast brake piston moves smoothly.

Piston stroke :0.76 - 1.44mm (0.0299 - 0.0567in)

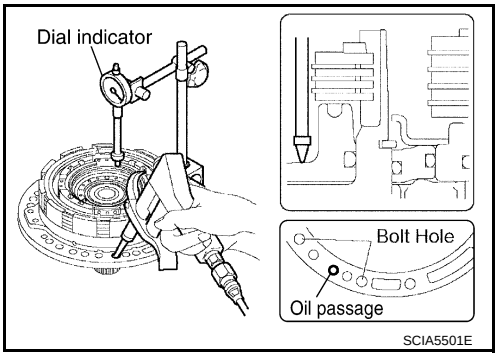

21. Install thrust washer facing the flat surface up.
CAUTION:
Apply petroleum jelly to thrust washer.

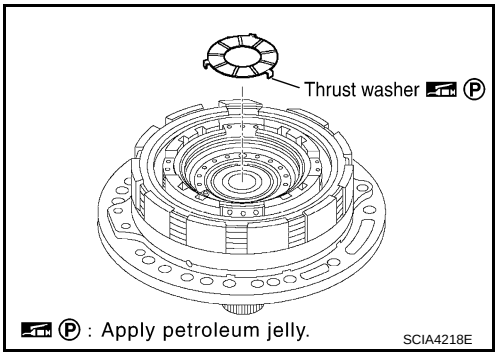

22. Install oil seal into oil pump assembly until it is flush using Tool.

Tool number : ST30720000 (J-25405)

CAUTION:
- **Do not reuse oil seal.**
- **Apply ATF to oil seal.**

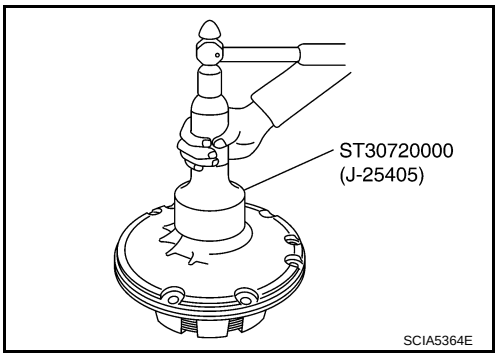

One-Way Clutch Outer Race Sub Assembly & 2nd Coast Brake Hub & One-Way Clutch No.1

INFOID:0000000001718106

COMPONENTS

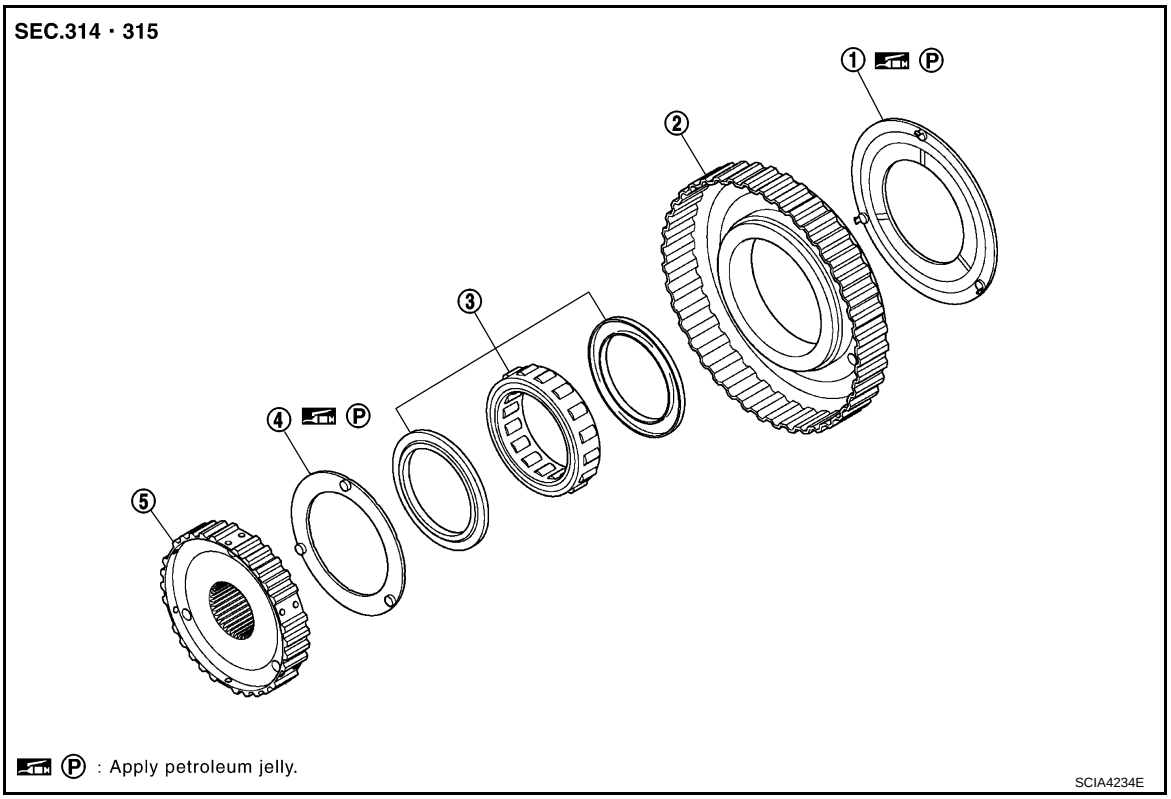

1. Thrust washer
2. One-way clutch outer race sub assembly
3. One-way clutch No.1
4. Thrust washer
5. 2nd coast brake hub

DISASSEMBLY

1. Remove thrust washer from one-way clutch outer race sub assembly.

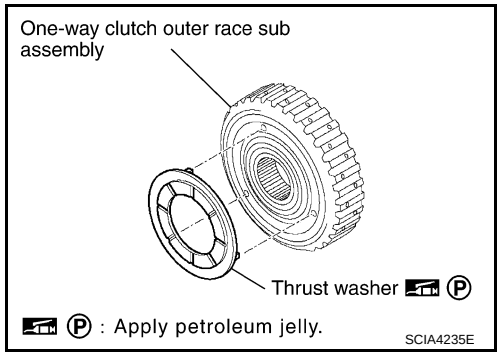

2. Remove 2nd coast brake hub from one-way clutch outer race sub assembly.
3. Remove thrust washer from 2nd coast brake hub.

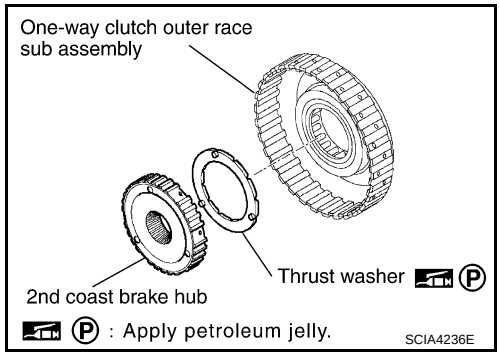

4. Remove one-way clutch No.1 from one-way clutch outer race sub assembly.

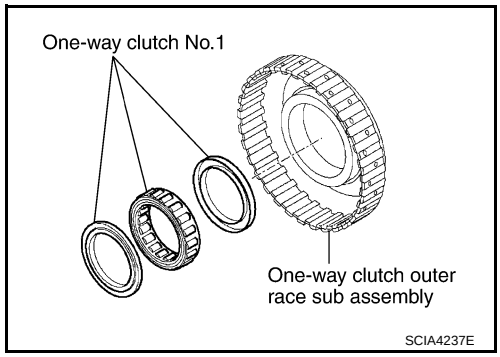

ASSEMBLY

1. Install one-way clutch No.1 into the one-way clutch outer race sub assembly.
   CAUTION:
   Do not mistake the direction of one-way clutch No.1.

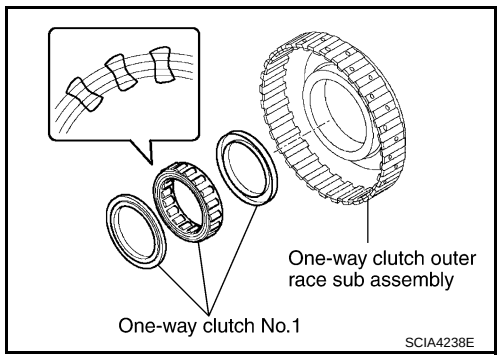

2. Install thrust washer into 2nd coast brake hub.
   CAUTION:
   Coat the thrust washer with petroleum jelly. Align the tab of the washer with the hollow of the 2nd coast brake hub.
3. Install 2nd coast brake hub into one-way clutch outer race sub assembly.
   CAUTION:
   While turning the 2nd coast brake hub, slide it into one-way clutch outer race sub assembly.

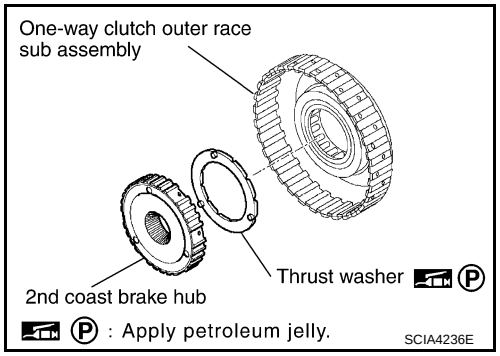

4. Coat the thrust washer with petroleum jelly. Align the tab of the washer with the hollow of the one-way clutch outer race sub assembly.
   CAUTION:
   Apply petroleum jelly to thrust washer.

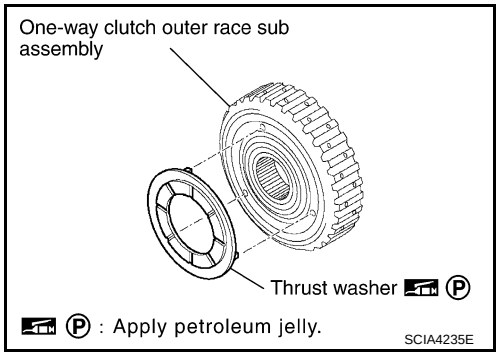

INSPECTION

- Hold one-way clutch outer race sub assembly, and check that 2nd coast brake hub turns freely clockwise and locks counterclockwise.

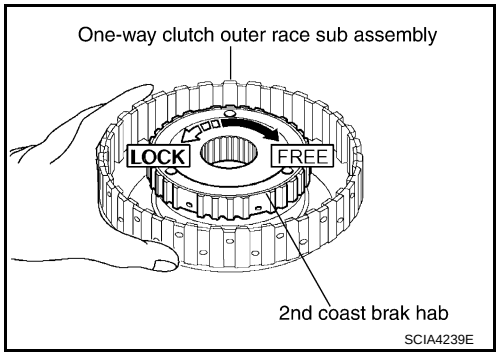

Transaxle Case Cover & B5 Brake

INFOID:0000000001718107

COMPONENTS

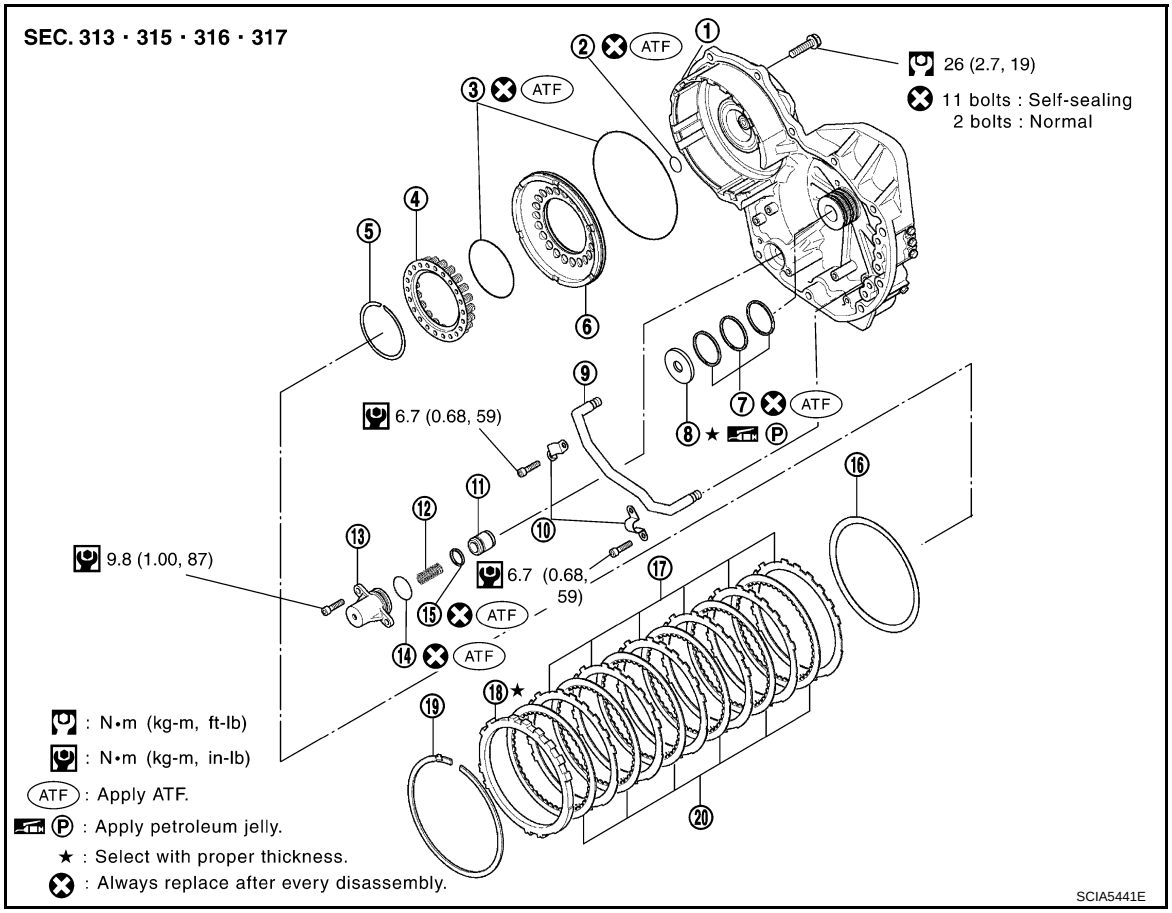

1. Transaxle case cover	2. Seal ring	3. O-ring
4. Return spring	5. Snap ring	6. B5 brake piston
7. Seal ring	8. Bearing race	9. U/D clutch apply tube sub assembly
10. Tube clamp	11. Forward clutch accumulator piston	12. Compression spring
13. Accumulator cover	14. O-ring	15. Seal ring
16. B5 brake cushion plate	17. B5 brake plate	18. B5 brake flange
19. Snap ring	20. B5 brake disc	

DISASSEMBLY

1. Remove tube clamps.

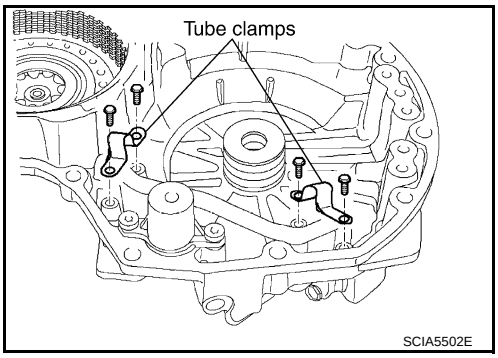

2. Remove the U/D clutch apply tube sub assembly using suitable tool.
CAUTION:
Be careful not to damage the U/D clutch apply tube sub assembly and transaxle case cover.

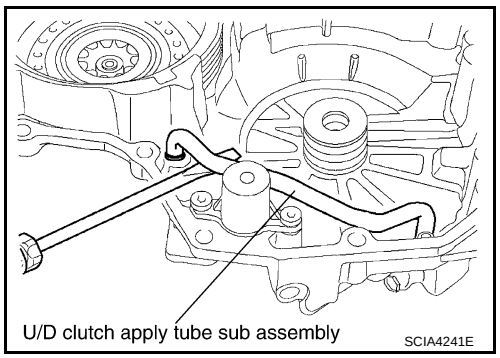

3. Remove bearing race and seal rings from transaxle case cover.

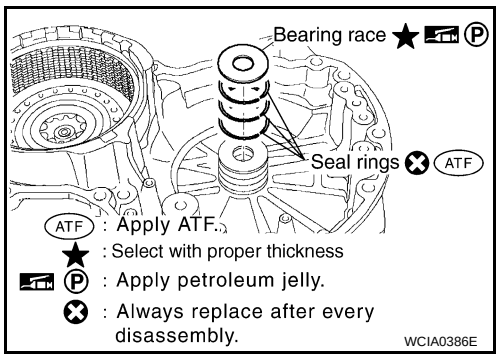

4. Remove accumulator cover, compression spring and forward clutch accumulator piston.
5. Remove O-ring from the accumulator cover.
6. Remove seal ring from the forward clutch accumulator piston.

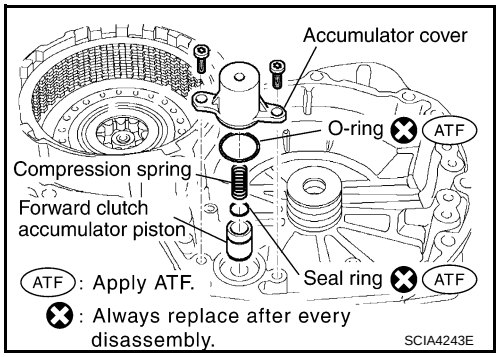

7. Remove snap ring using suitable tool.

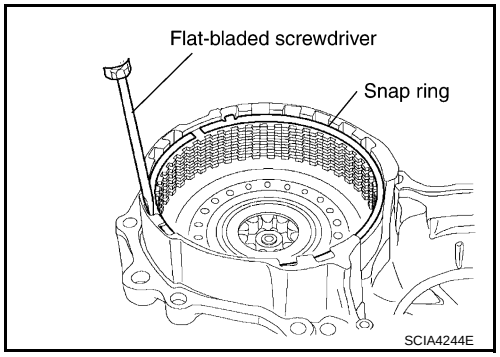

8. Remove B5 brake flange, B5 brake discs, B5 brake plates and B5 brake cushion plate.

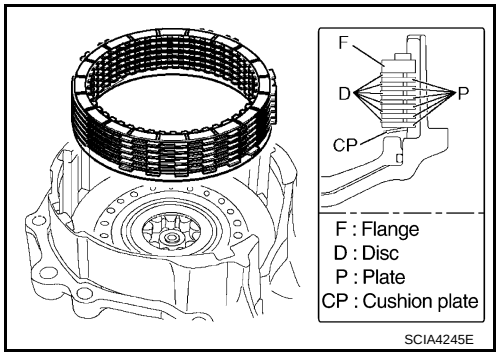

9. Place Tool on return spring, and compress return spring with a press.

Tool number : KV31102400 (J-34285 and J-34285-87)

CAUTION:
Do not press return spring too much to avoid deformation.

10. Remove snap ring using suitable tool.

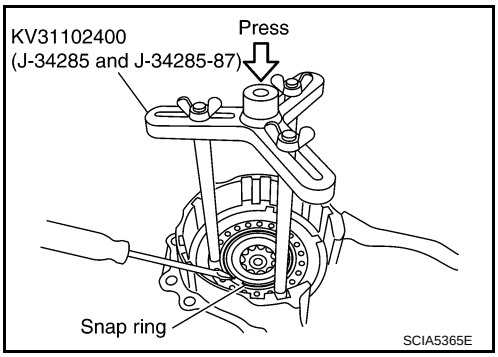

11. Remove return spring.

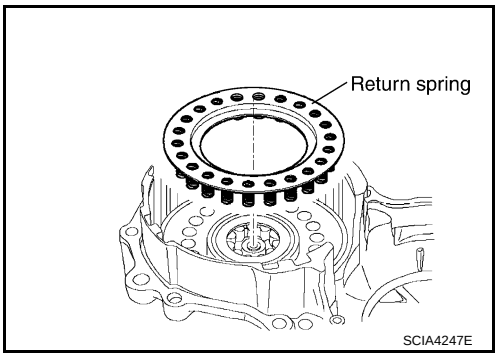

12. While pushing B5 brake piston by hand, apply compressed air (4Kg/cm^2) into the oil passage as shown and remove B5 brake piston.

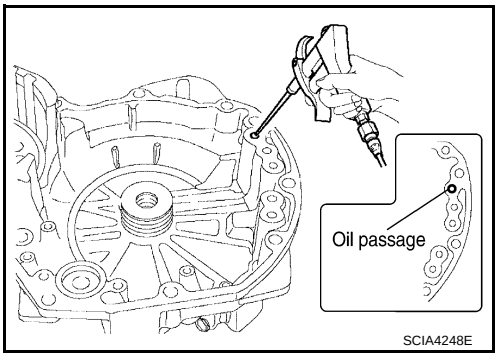

13. Remove O-rings from B5 brake piston.
14. Remove seal ring from transaxle case cover.

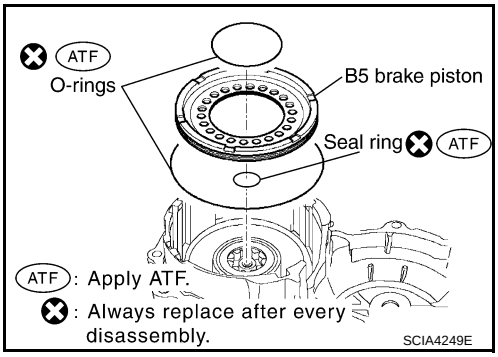

INSPECTION

- Check that the sliding surface of discs and plates are not worn or burnt. If the discs or plates are worn or burnt, replace them.
  CAUTION:
  Soak new clutch discs at least 2 hours in ATF.

ASSEMBLY

1. Install seal ring in transaxle case cover.
   CAUTION:
   - **Do not reuse seal ring.**
   - **Apply ATF to seal ring.**
2. Install O-rings in B5 brake piston.
   CAUTION:
   - **Do not reuse O-rings.**
   - **Apply ATF to O-rings.**
3. Coat the inner surface of transaxle case cover with ATF.
4. Press B5 brake piston into the transaxle case cover.

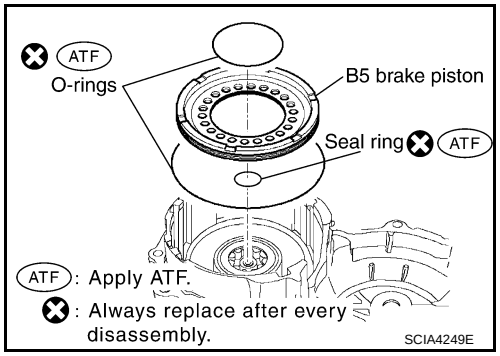

5. Place return spring on B5 brake piston.

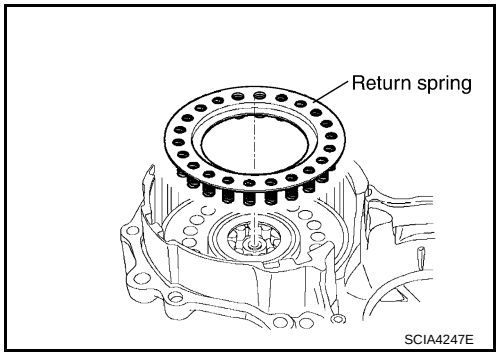

6. Place Tool on return spring, and compress return spring with a press.

   Tool number : KV31102400 (J-34285 and J-34285-87)

   CAUTION:
   Do not press return spring too much to avoid deformation.
7. Install snap ring using suitable tool.

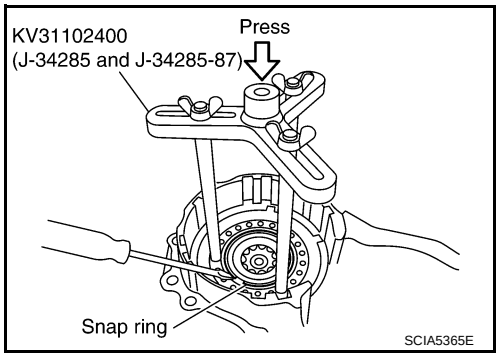

8. Install B5 brake cushion plate.
   CAUTION:
   Be sure direction of B5 brake cushion plate.
9. Install B5 brake flange, B5 brake plates and B5 brake discs as shown.

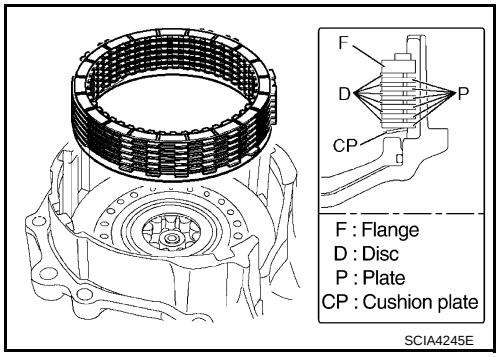

10. Install snap ring using suitable tool.

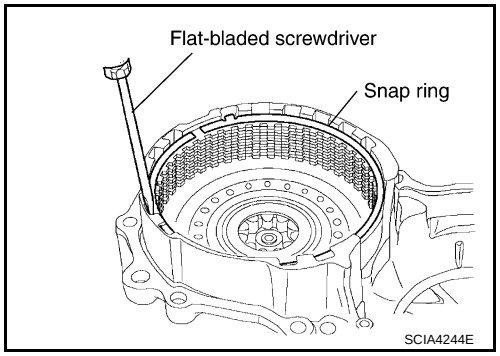

11. Install O-ring in accumulator cover.
    CAUTION:
    - **Do not reuse O-ring.**
    - **Apply ATF to O-ring.**
12. Install seal ring in forward clutch accumulator piston.
    CAUTION:
    - **Do not reuse seal ring.**
    - **Apply ATF to seal ring.**
13. Install forward clutch accumulator piston, compression spring and accumulator cover in transaxle case cover.
14. Tighten accumulator cover torx bolts to specified torque. Refer to "COMPONENTS".

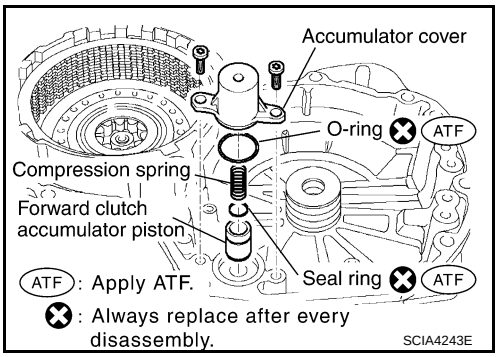

15. Install seal rings and bearing race in transaxle case cover.
    CAUTION:
    - **Do not reuse seal rings.**
    - **Apply ATF to seal rings.**
    - **Apply petroleum jelly to bearing race.**
    - **Assemble the selected bearing race in the correct order. Refer to AT-268.**

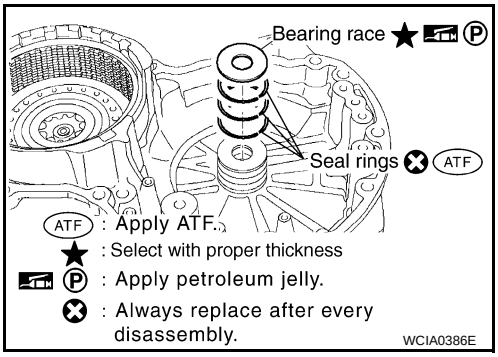

16. Install the U/D clutch apply tube sub assembly using suitable tool.

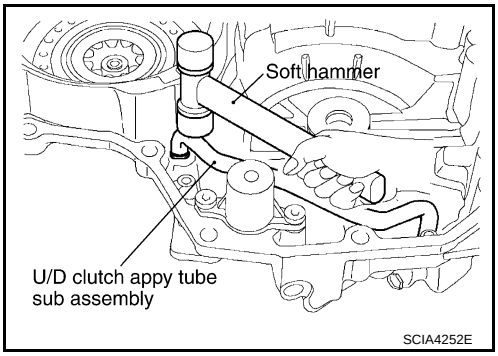

17. Tighten tube clamp bolts to specified torque. Refer to "COMPONENTS".

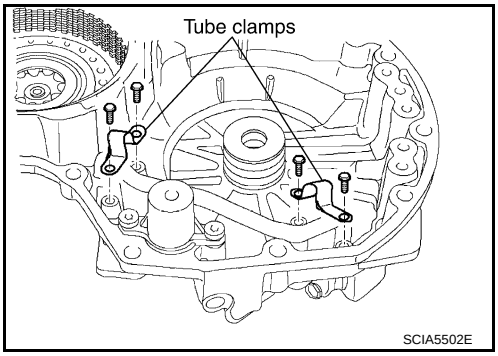

18. Set a dial indicator as shown.
19. When applying compressed air (4Kg/cm^2) into the oil passage as shown, measure the B5 brake piston stroke and check the B5 brake piston moves smoothly.

Piston stroke :2.34 - 2.70mm (0.0921 - 0.1063in)

If the B5 brake piston stroke is out standards, select another flange. Refer to AT-294, "Clutch, Gear and Brakes".

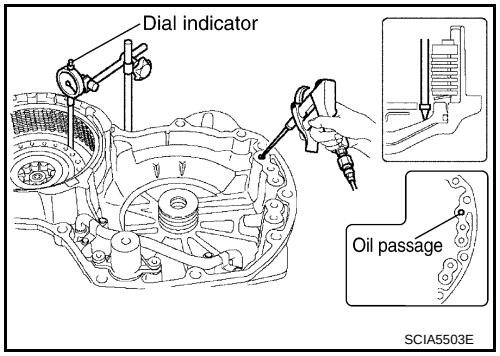

Differential Gear Assembly

INFOID:0000000001718108

COMPONENTS

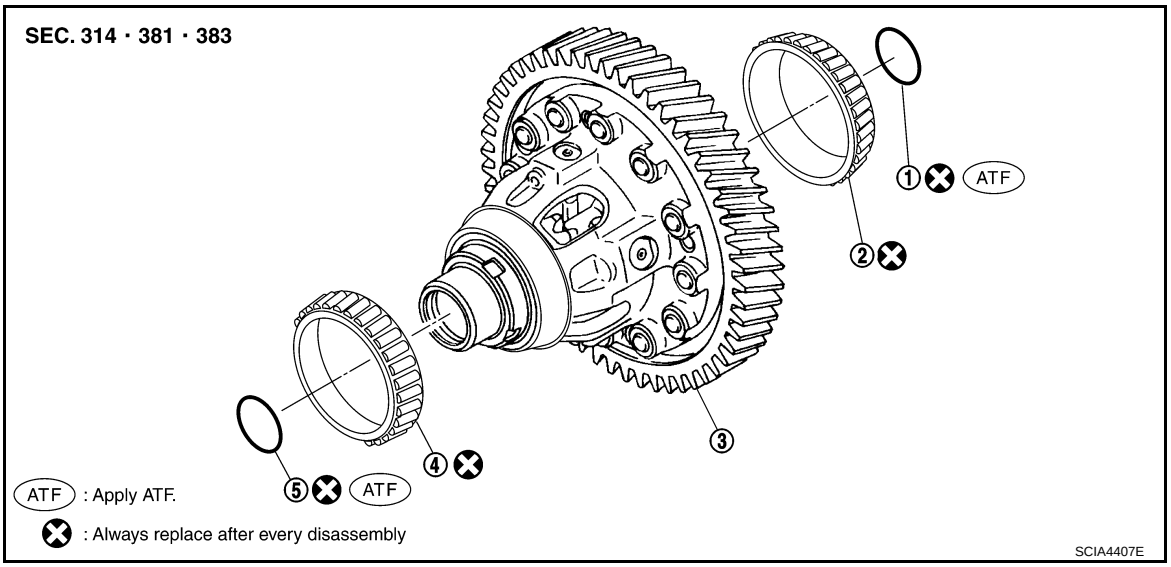

1. O-ring
2. Tapered roller bearing
3. Differential gear assembly
4. Tapered roller bearing
5. O-ring

DISASSEMBLY

1. Remove O-rings from differential gear assembly.

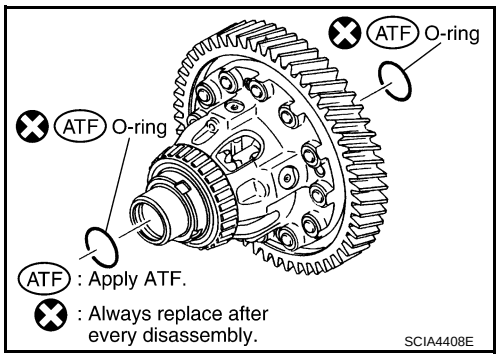

2. Remove tapered roller bearings using Tool.

Tool number : ST33061000 (J-8107-2)

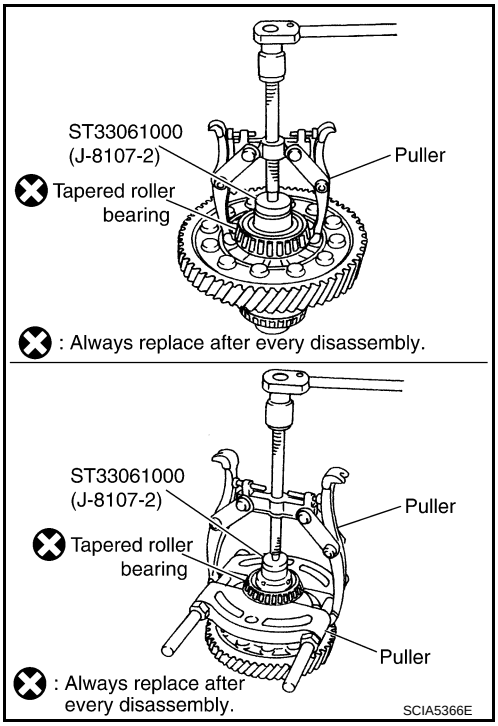

ASSEMBLY

1. Install tapered roller bearings in differential gear assembly using Tools.

Tool numbers : KV38100500 (—)
: ST30720000 (J-25405)

CAUTION:
Do not reuse tapered roller bearings.

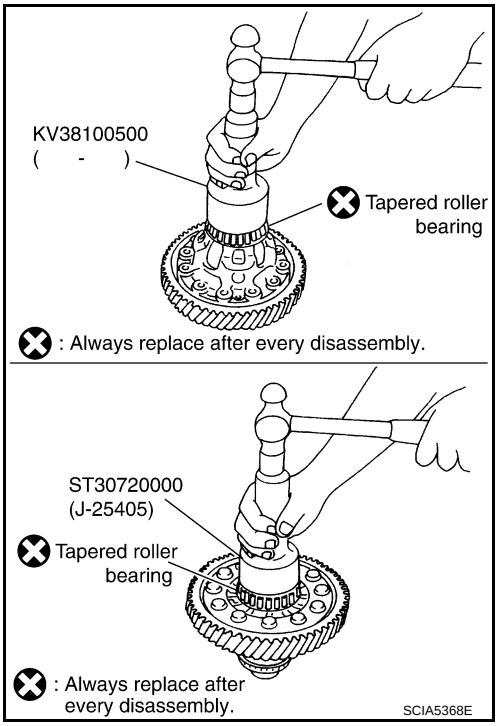

2. Install O-rings in differential gear assembly.
   CAUTION:
   - **Do not reuse O-rings.**
   - **Apply ATF to O-rings.**

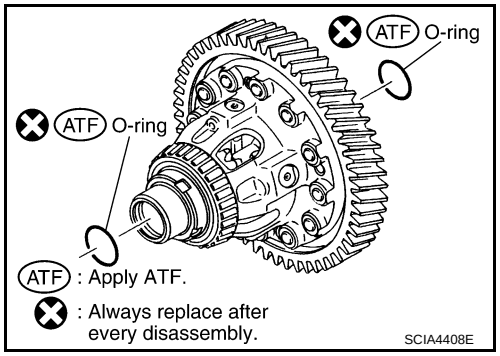

ASSEMBLY

Assembly (1)

INFOID:0000000001718109

1. Install the new differential side oil seal into transaxle case using Tool.

Tool number : ST33400001 (J-26082)

CAUTION:
- **Do not reuse differential side oil seal.**
- **Apply ATF to differential side oil seal.**

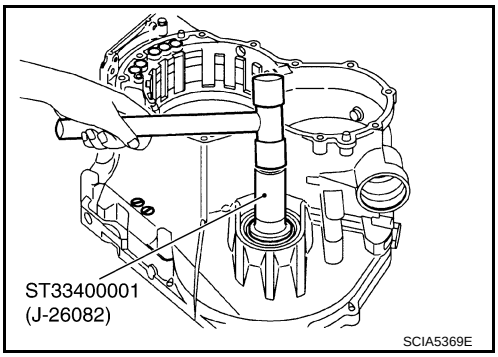

Distance : 3.0 - 4.0 mm (0.118 - 0.157 in)

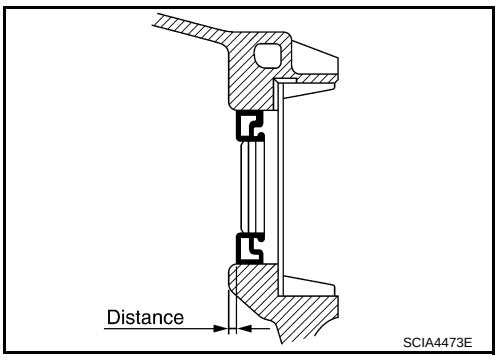

2. Install counter drive gear sub assembly.

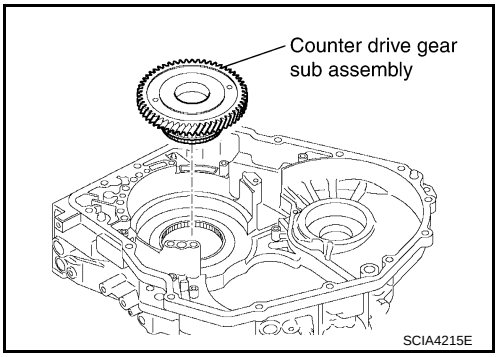

3. Install snap ring using suitable tool.

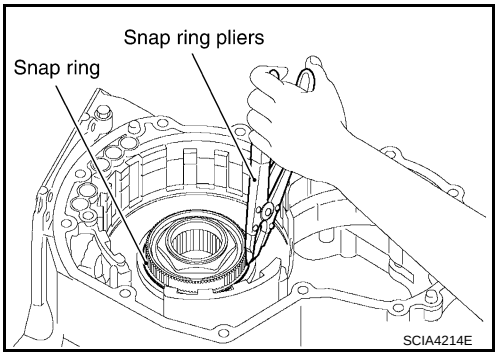

4. Install new O-rings in 1st and reverse brake piston.
   CAUTION:
   - **Do not reuse O-rings.**
   - **Apply ATF to O-rings.**
5. Coat the inner surface of transaxle case with ATF.
6. Install 1st and reverse brake piston in transaxle case.

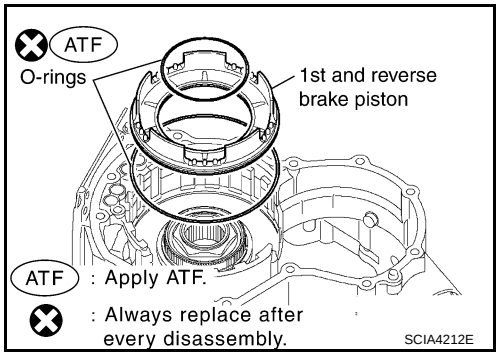

7. Put return spring on 1st and reverse brake piston.

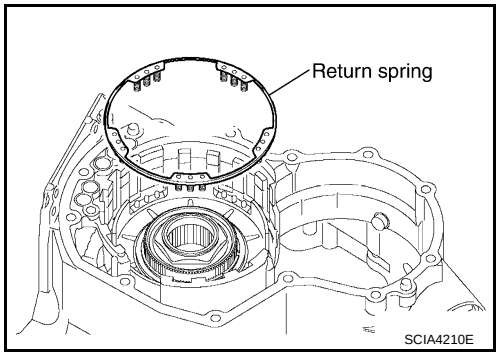

8. While compressing the return spring by hand, install the snap ring into groove using suitable tool.

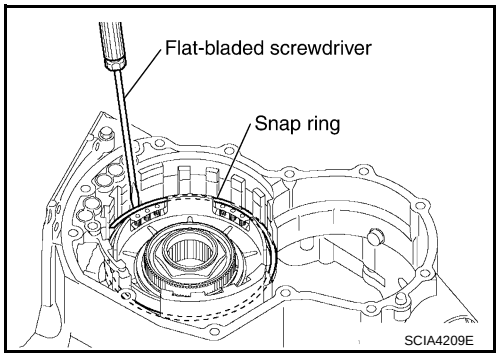

9. Put thrust bearing race and thrust bearing on counter drive gear sub assembly.
   CAUTION:
   Apply petroleum jelly to thrust bearing and thrust bearing race.

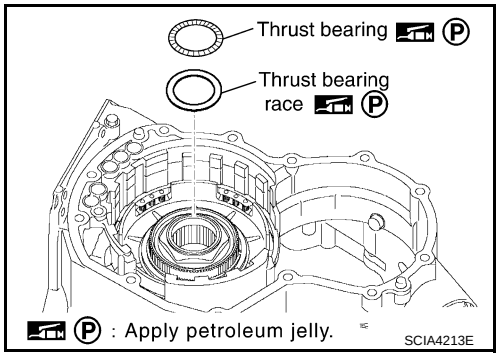

10. Install FR planetary ring gear assembly with one-way clutch No. 2.

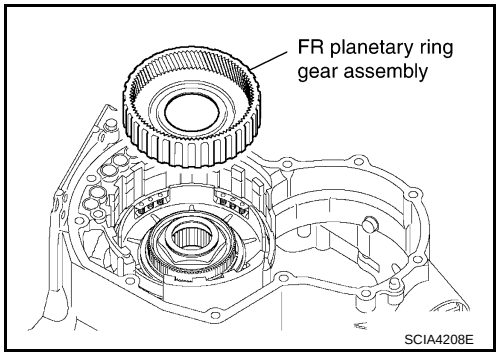

11. Install 1st and reverse brake flanges, 1st and reverse brake discs and 1st and reverse brake plates.

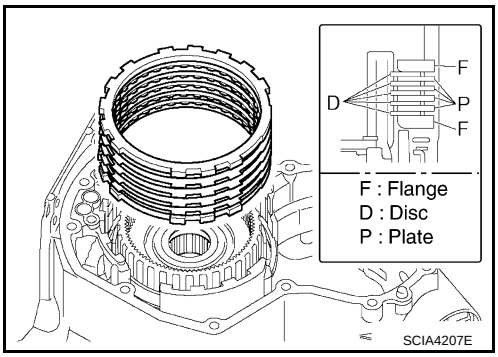

12. Install snap ring using suitable tool.

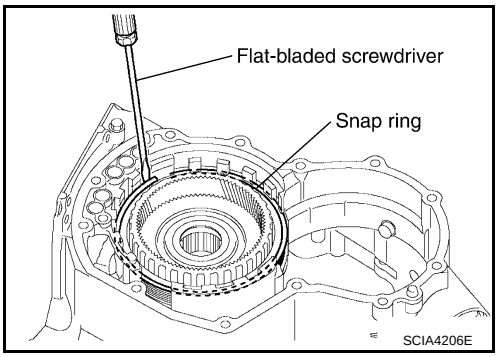

13. Set a dial indicator as shown.
14. Applying compressed air (4Kg/cm^2) and measure the 1st and reverse brake piston stroke.

Piston stroke : 1.39 - 2.21 mm (0.0547 - 0.0870 in)

In a case that is out of reference, check the following items:
- Oil pressure leak
- Damage of O-ring
- Wear damage of discs

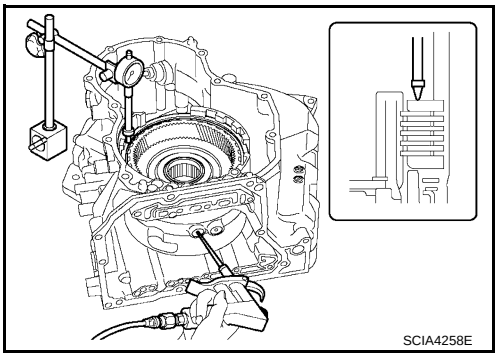

15. Install thrust bearing.
CAUTION:
Apply petroleum jelly to thrust bearing.

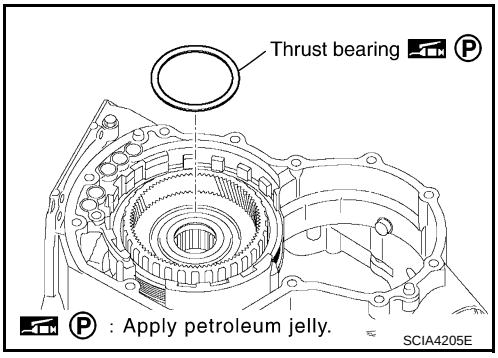

16. Install planetary gear assembly.
17. Install thrust bearing race in planetary gear assembly.
CAUTION:
Apply petroleum jelly to thrust bearing race.

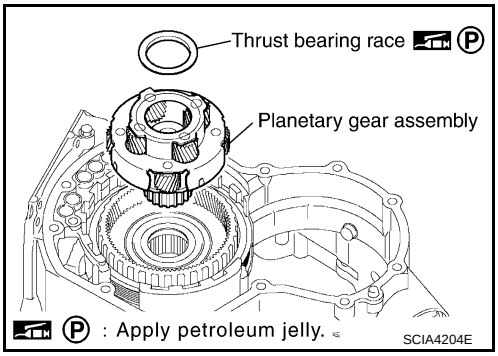

18. Install thrust needle roller bearing and thrust bearing race in RR planetary ring gear assembly.
    CAUTION:
    Apply petroleum jelly to thrust needle roller bearing and thrust bearing race.
19. Install RR planetary ring gear assembly.

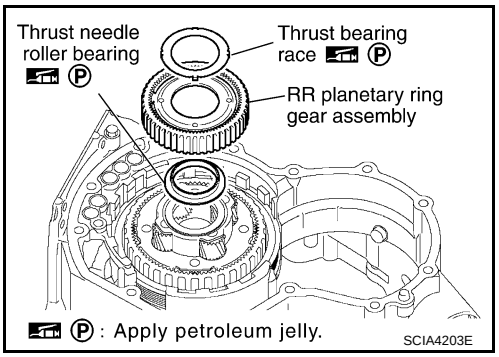

20. Install planetary sun gear sub assembly and thrust needle roller bearings.
    CAUTION:
    Apply petroleum jelly to thrust needle roller bearings.

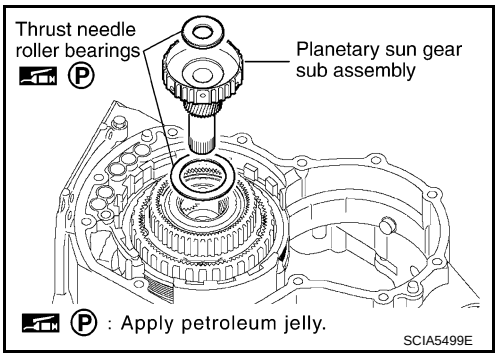

21. Install forward and direct clutch assembly.

22. Install thrust bearing race, thrust needle roller bearing and new seal ring in forward and direct clutch assembly.
    CAUTION:
    - **Apply petroleum jelly to thrust needle roller bearing and thrust bearing race.**
    - **Apply ATF to seal ring.**
    - **Do not reuse seal ring.**

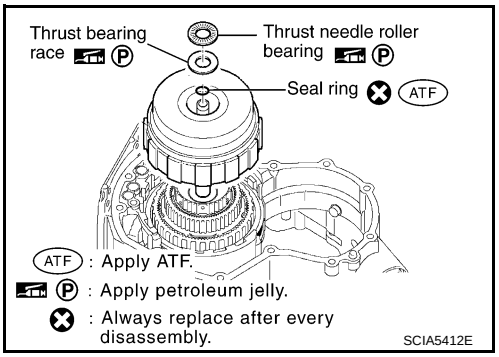

23. Check the distance of “A”.

    “A” : 50.850 - 51.825 mm (2.0020 - 2.0404 in)

    CAUTION:
    If the distance is out of standards, adjust with in standards again.

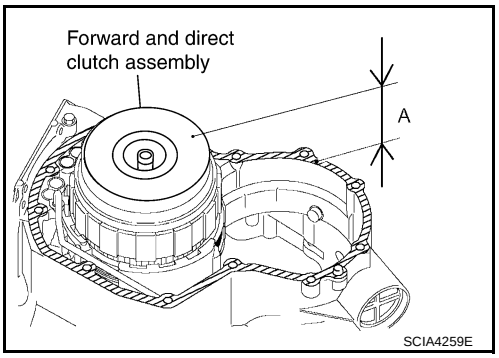

24. Install transaxle lube apply tube using suitable tool.
    CAUTION:
    Be careful not to bend and damage transaxle lube apply tube.

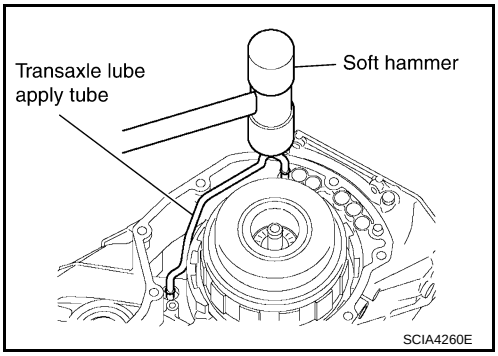

25. Tighten tube clamp bolt to specified torque. Refer to AT-225, "Component".

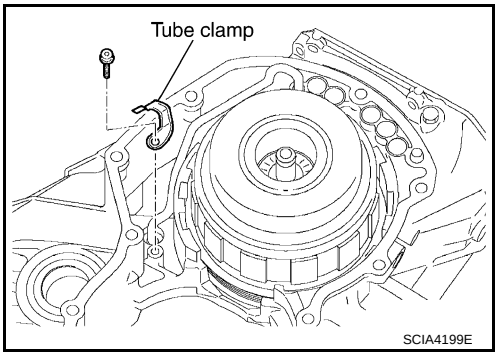

26. Install new governor apply gaskets in transaxle case.
    CAUTION:
    - **Do not reuse governor apply gaskets.**
    - **Apply petroleum jelly to governor apply gaskets.**

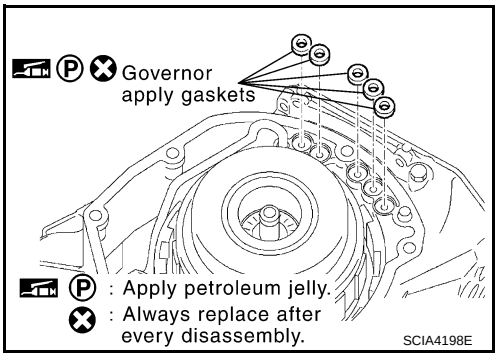

27. Install transaxle case cover in transaxle case.

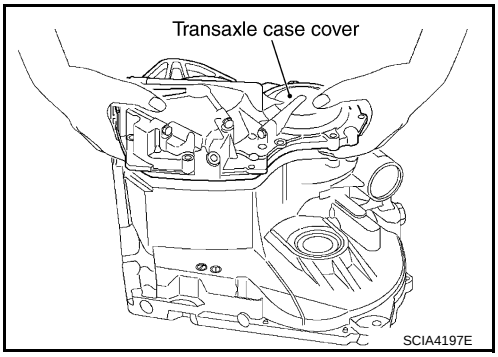

28. Tighten transaxle case cover bolts to specified torque. Refer to AT-225, "Component".
    CAUTION:
    Use old seal bolts for re-installing transaxle case cover when checking and adjusting the end play.

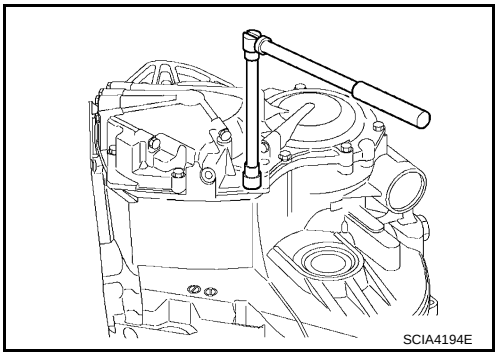

Bolt symbol	Length mm (in)	Number of bolts
A	30 (1.18)	8
B	45 (1.77)	2
C	48 (1.89)	2
D*	—	1

*:Stud bolt

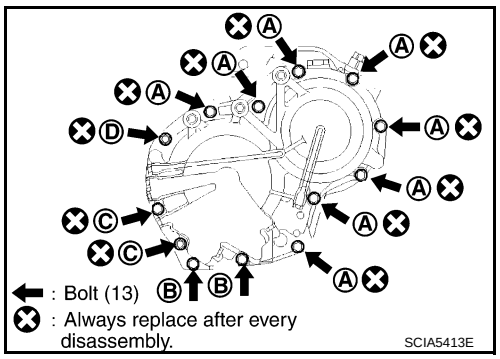

29. Tighten anchor bolt to specified torque. Refer to AT-225, "Component".

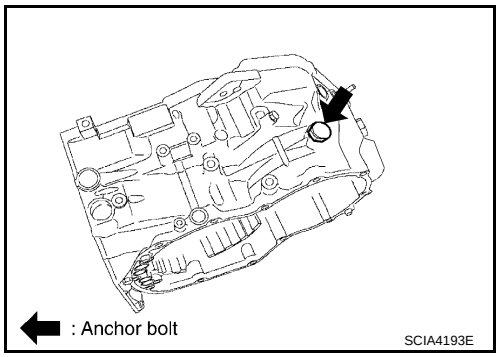

30. Install new O-ring in U/D brake piston assembly.
CAUTION:
- **Do not reuse O-ring.**
- **Apply ATF to O-ring.**
31. Coat the inner surface of transaxle case with ATF.
32. Install compression spring and U/D brake piston assembly.

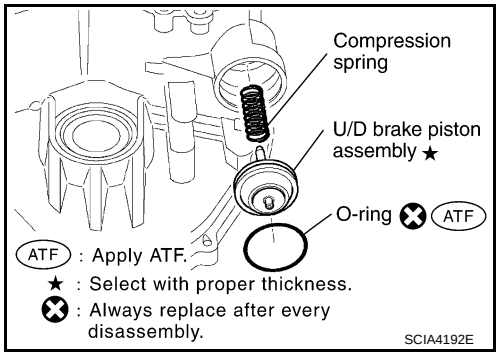

33. Install new O-rings in U/D brake damper assembly.
CAUTION:
- **Do not reuse O-rings.**
- **Apply ATF to O-rings.**
34. Install U/D brake damper assembly.

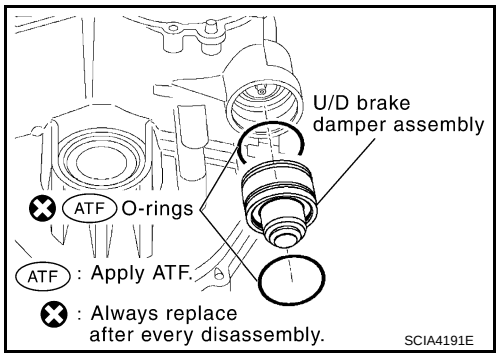

35. Install snap ring using suitable tool.
CAUTION:
If the snap ring is deformed, replace it.

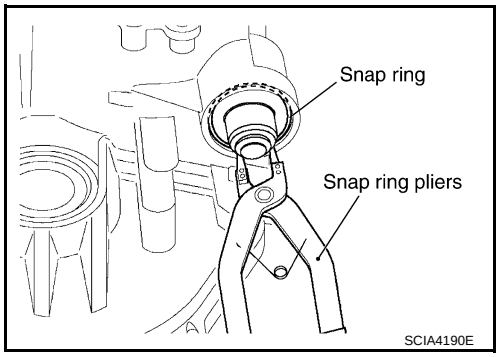

36. Install thrust needle roller bearing, adjust shim and thrust bearing race in U/D RR planetary ring gear sub assembly.
CAUTION:
Apply petroleum jelly to adjust shim, thrust needle roller bearing and thrust bearing race.
37. Install U/D RR planetary ring gear sub assembly.

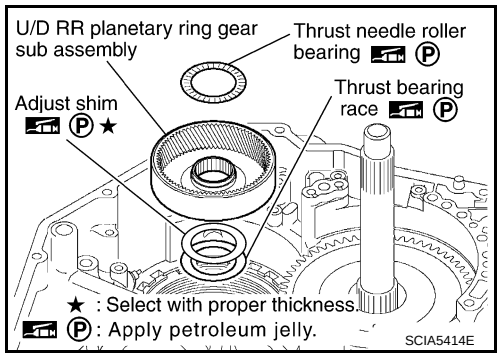

38. Install U/D RR planetary carrier assembly and thrust bearing races.
CAUTION:
Apply petroleum jelly to thrust bearing races.

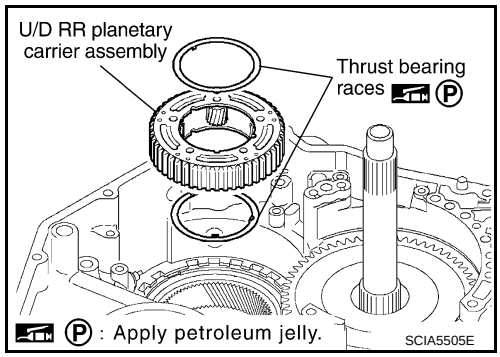

39. Install U/D brake band assembly.

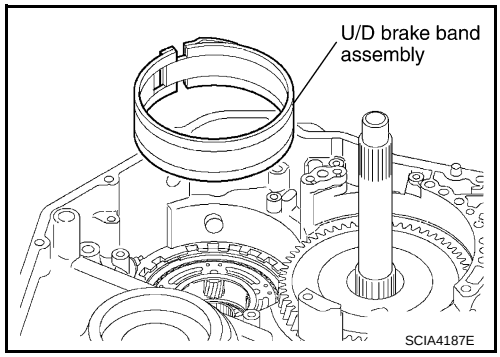

40. Install U/D clutch assembly.

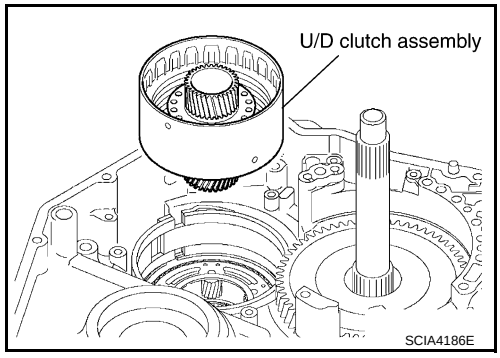

41. Measure the U/D brake piston stroke by applying and releasing the compressed air (4Kg/cm^2) as shown.
CAUTION:
Measure U/D brake piston stroke after assembling U/D clutch assembly.

Piston Stroke : 5.76 - 6.76 mm (0.2268 - 0.2661 in)

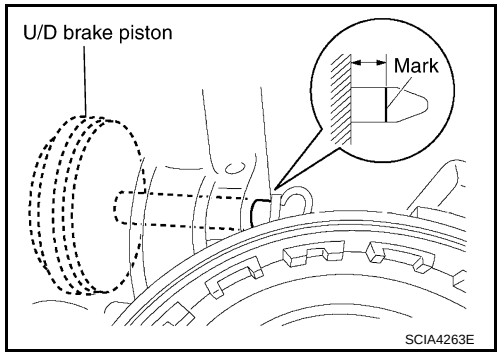

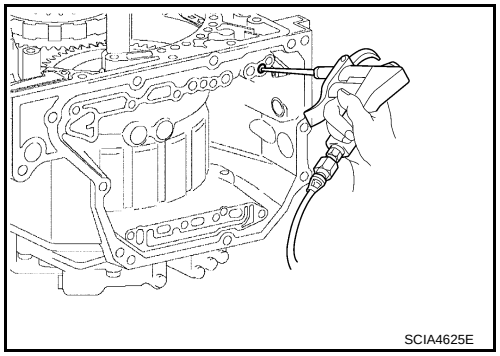

42. If the piston stroke is out of standards, select another U/D brake piston. Refer to AT-294, "Clutch, Gear and Brakes".

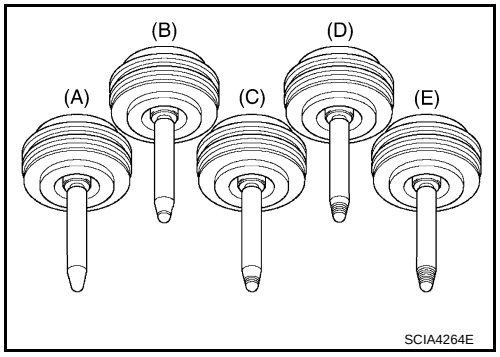

Adjustment

INFOID:0000000001718110

ADJUST PRELOAD OF TAPERED ROLLER BEARING

1. Install adjust shim and outer race in transaxle case using Tools.

Tool numbers	**: KV40100621 (J-25273)**
	: ST30022000 (—)

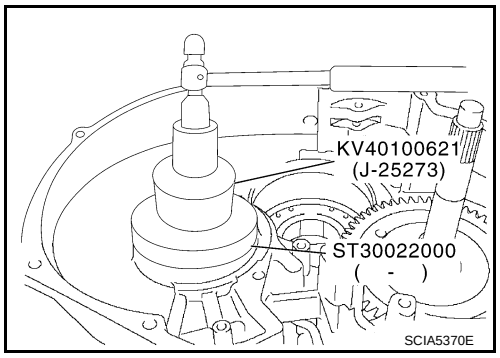

2. Install differential gear assembly in transaxle case.
3. Install transaxle housing into transaxle case.

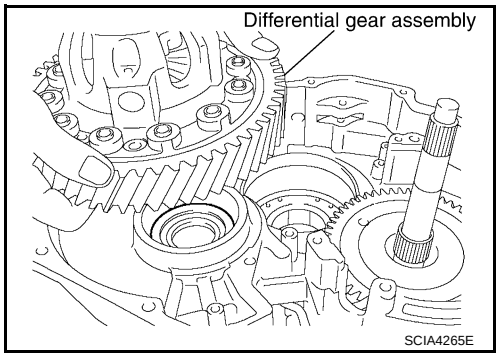

4. Tighten transaxle housing and transaxle case bolts to specified torque. Refer to AT-225, "Component".
   CAUTION:
   Use old seal bolts for re-installing transaxle housing when checking and adjusting preload.

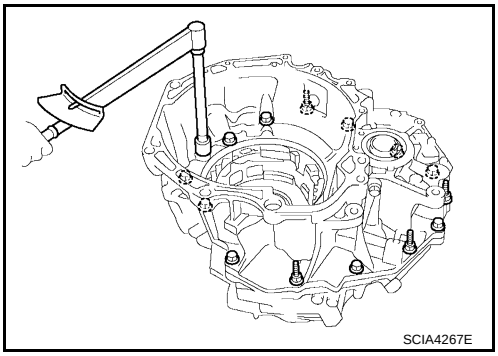

Bolt symbol	Length mm (in)	Number of bolts
A	30 (1.18)	13
B	35 (1.38)	2
C	45 (1.77)	1
D*	—	1

*:Torx bolt

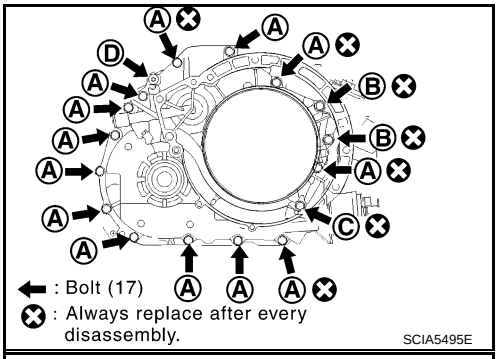

5. Measure turning torque of differential gear assembly using Tools.

   Tool numbers : KV40102500 (J-28815)
   : ST3127S000 (J-25765-A)

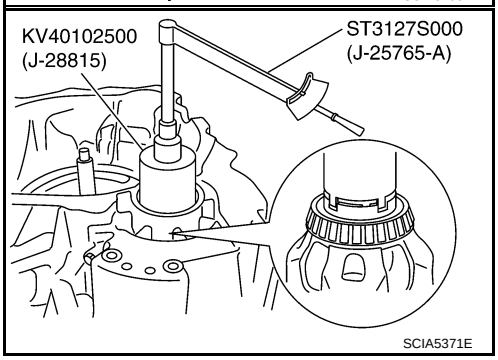

6. Turn differential gear assembly in both directions several times to seat bearing rollers correctly.

   Turning torque (New bearing) : 0.7 - 1.2 N·m (0.08 - 0.12kg-m, 7 - 10 in-lb)

   If the preload is not within specification, remove differential gear assembly from transaxle case. Re-select adjust shim. Refer to AT-296, "Final Drive".

Assembly (2)

INFOID:0000000001718111

1. Remove transaxle housing and differential gear assembly from transaxle case.
2. Install new seal rings in U/D gear assembly.
   CAUTION:
   - **Do not reuse seal rings.**
   - **Apply ATF to seal rings.**
3. Install U/D gear assembly.

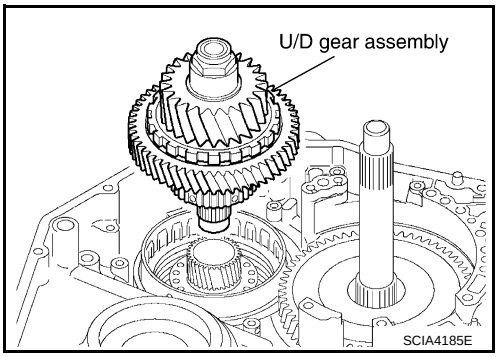

4. Install thrust needle roller bearing and thrust bearing race in U/D gear assembly.

a. Perform the following procedure for adjustment.

CAUTION:
Apply petroleum jelly to thrust needle roller bearing and thrust bearing race.

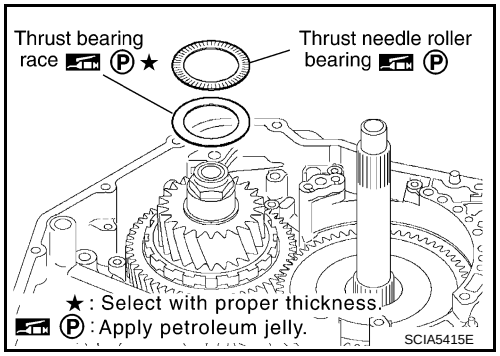

b. Make sure that measurement “E” is within the specifications.

Specification E : 1.269 - 1.645 mm (0.0500 - 0.0648 in)

NOTE:
“E” is the height between the edge of transaxle case and the roller part of thrust needle roller bearing.

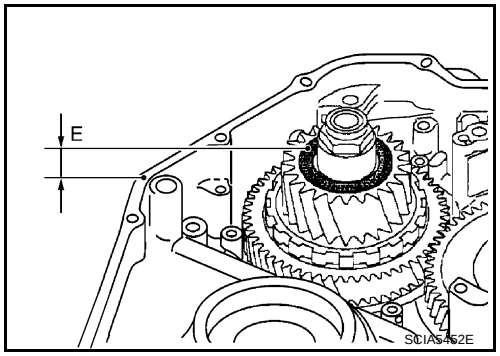

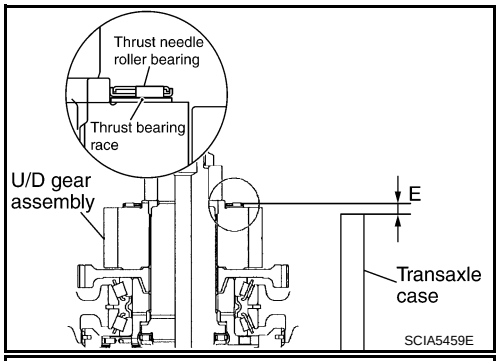

c. If measurement “E” is outside the specifications, replace “T” with one that has applicable thickness. Refer to AT-294, "Clutch, Gear and Brakes".

CAUTION:
When adjusting “T”, use “S” of thickness 0.81mm (0.032in).

d. If all of “T” do not fit “E” within the specifications, replace “S” with one that has applicable thickness. Refer to AT-294, "Clutch, Gear and Brakes".

CAUTION:
When adjusting “S”, use “T” of thickness 0.80mm (0.031in).

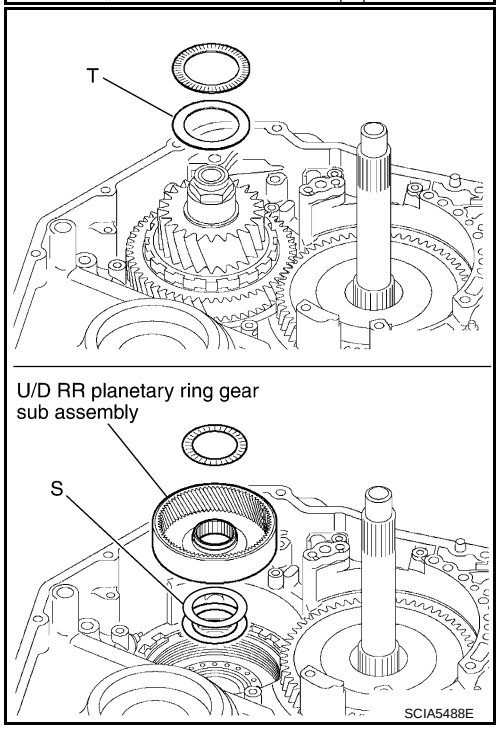

e. Make sure that measurement “E” is within the specifications.

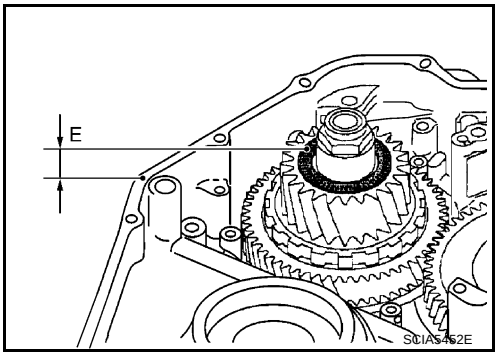

5. Install new manual valve oil seal into transaxle case until it is flush using Tool.

Tool number : ST33061000 (J-8107-2)

CAUTION:
- **Do not reuse manual valve oil seal.**
- **Apply ATF to manual valve oil seal.**

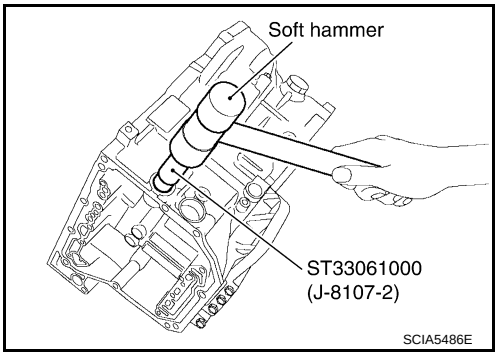

6. Install spring guide sleeve and torsion spring No. 2 in transaxle case.
7. Tighten spring guide sleeve and torsion spring No. 2 torx bolt to specified torque. Refer to AT-225, "Component".

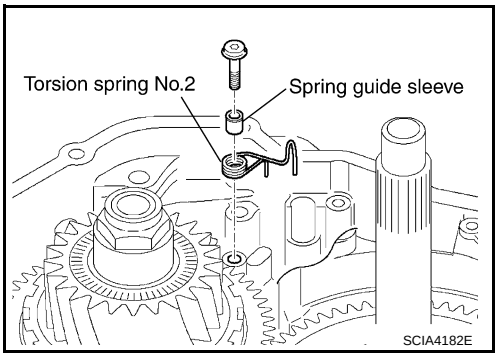

8. Install parking lockpin sub assembly.

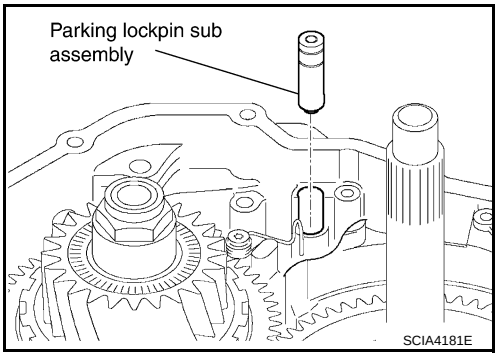

9. Install parking lock pawl bracket and parking lock pawl.

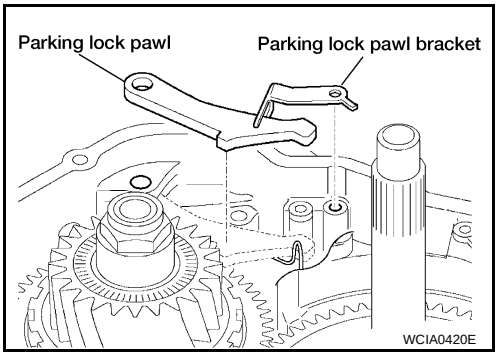

10. Install parking lock pawl shaft and torsion spring No. 1.

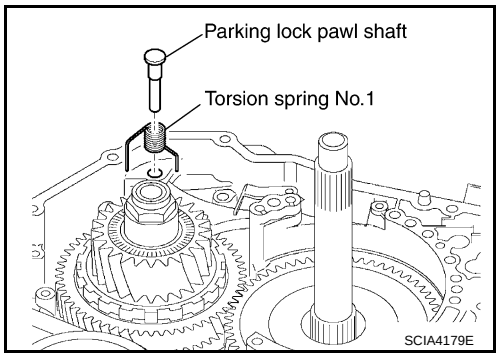

11. Install manual detent spring sub assembly.

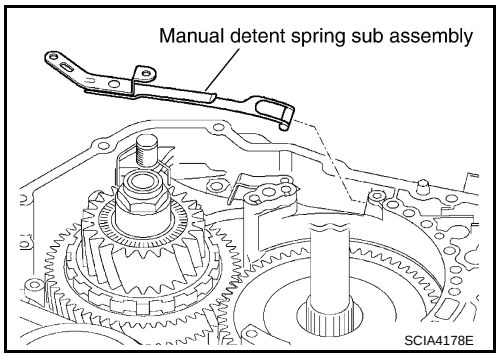

12. Temporarily tighten the bolts.

Bolt symbol	Length mm (in)	Number of bolts
A	16.7 (0.657)	1
B	14.0 (0.551)	1

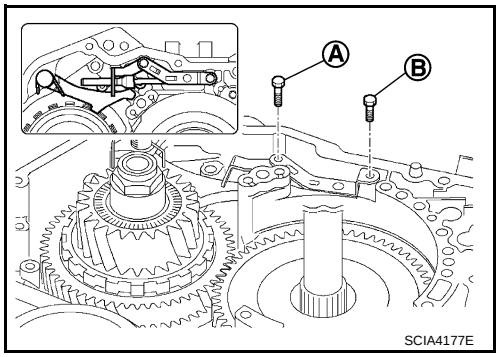

13. Install parking lock rod sub assembly.

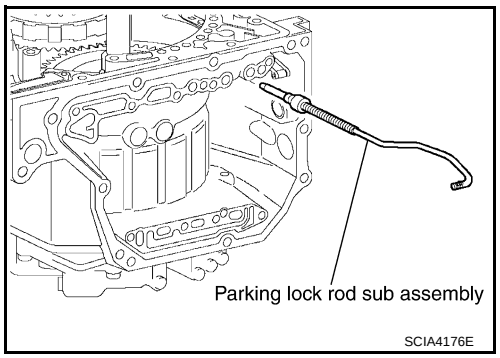

14. Install manual valve lever sub assembly connect parking lock rod sub assembly to it.

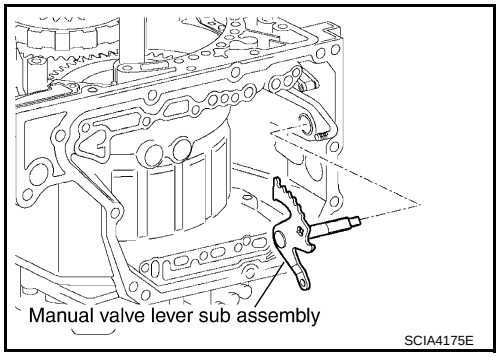

15. Connect manual detent spring sub assembly to manual valve lever sub assembly using suitable tool.

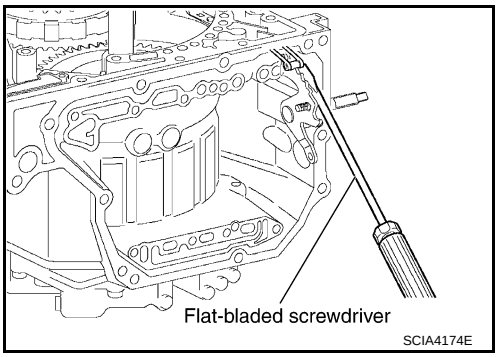

16. Tighten manual detent spring sub assembly bolts to specified torque. Refer to AT-225, "Component".

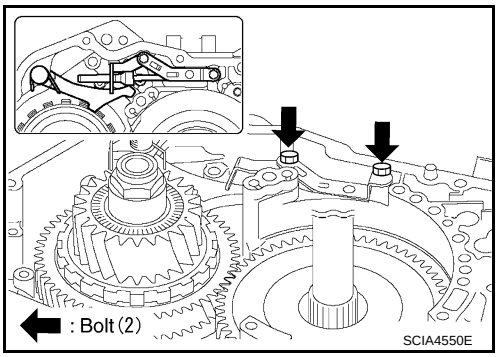

17. Install U/D brake apply tube sub assembly using suitable tool.
CAUTION:
Be careful not to damage U/D brake apply tube sub assembly.

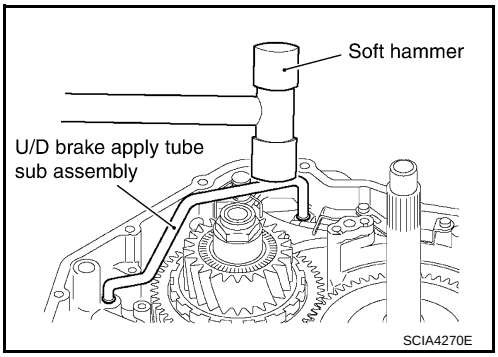

18. Tighten tube clamp bolts to specified torque. Refer to AT-225, "Component".

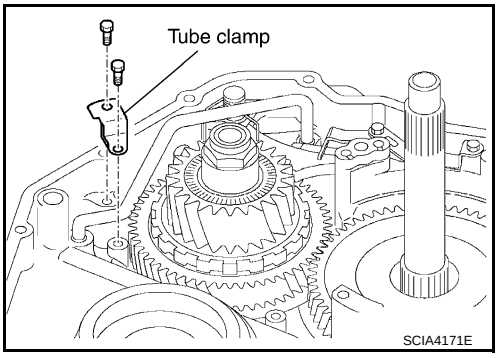

19. Install oil reservoir plate in transaxle case.
20. Tighten oil reservoir plate bolts to specified torque. Refer to AT-225, "Component".

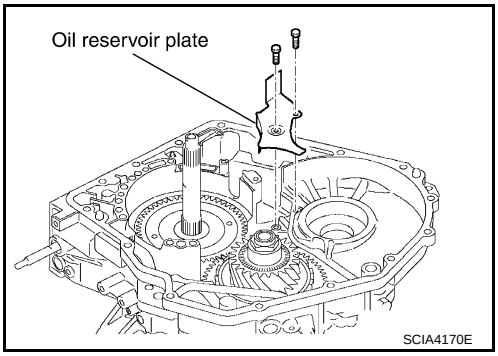

21. Install oil strainer sub assembly in transaxle case.
22. Tighten oil strainer sub assembly bolt to specified torque. Refer to AT-225, "Component".

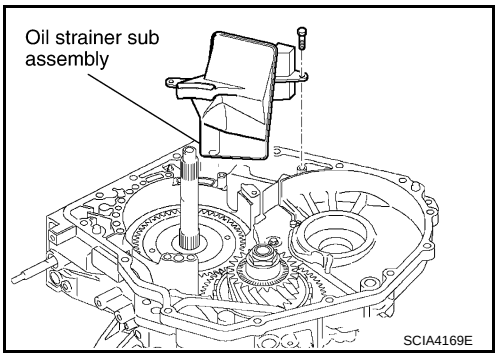

23. Install differential gear assembly.

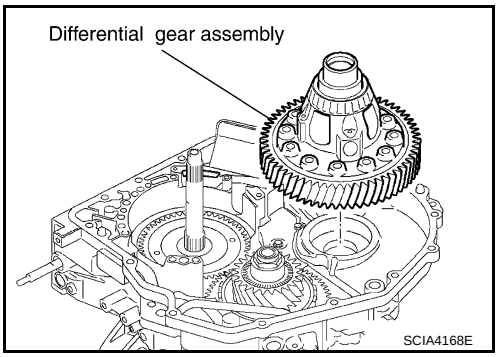

24. Drive new differential side oil seal into transaxle housing using Tool.

Tool number : ST33400001 (J-26082)

Distance : 14.8 - 15.8 mm (0.583 - 0.622 in)

CAUTION:
- **Do not reuse differential side oil seal.**
- **Apply ATF to differential side oil seal.**

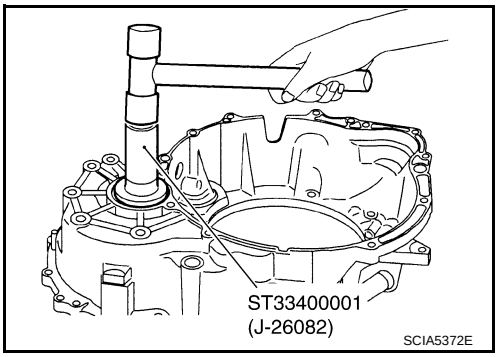

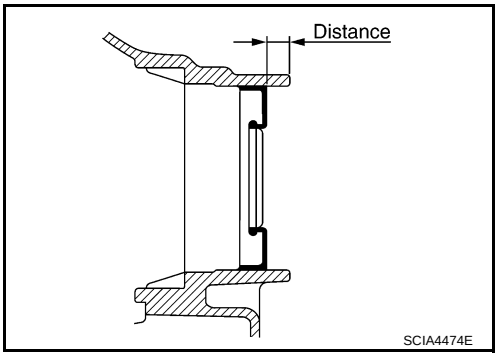

25. Install new thrust roller bearing in transaxle housing using Tool.

Tool number : ST30720000 (J-25405)

CAUTION:
Do not reuse thrust roller bearing.

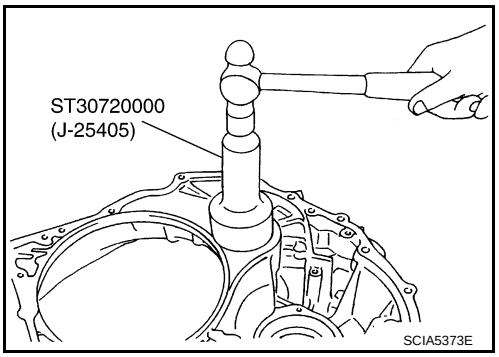

26. Install oil cleaner magnets on oil reservoir plate.

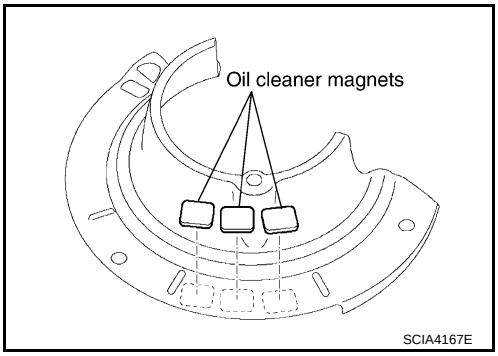

27. Install oil reservoir plate in transaxle housing.
28. Tighten oil reservoir plate bolts to specified torque. Refer to AT-225, "Component".

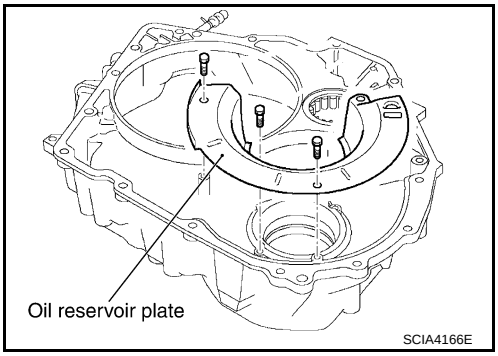

29. install differential gear lube apply tube using suitable tool.
    CAUTION:
    Be careful not to bend or damage differential gear lube apply tube.

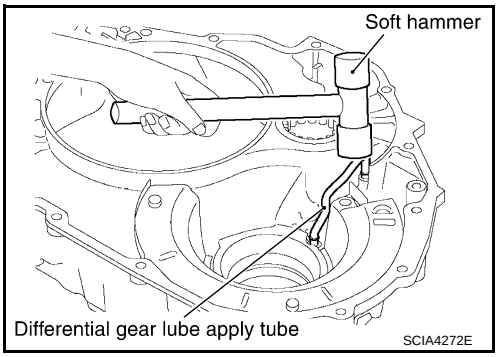

30. Tighten tube clamp bolt to specified torque. Refer to AT-225, "Component".

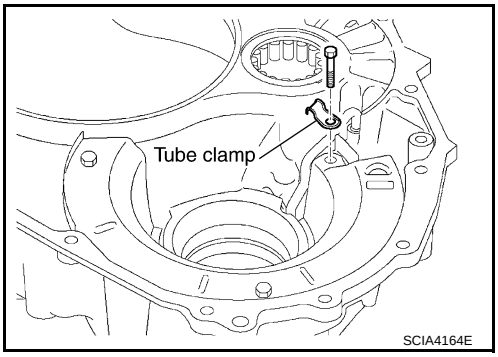

31. Install new governor apply gasket.
    CAUTION:
    - **Do not reuse governor apply gasket.**
    - **Apply petroleum jelly to governor apply gasket.**
32. Install new seal ring.
    CAUTION:
    - **Do not reuse seal ring.**
    - **Apply ATF to seal ring.**

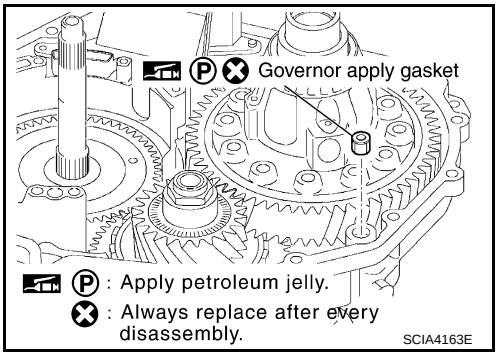

33. Apply silicone RTV to transaxle housing as shown. Refer to GI-42, "Recommended Chemical Product and Sealant".
CAUTION:
Completely remove all moisture, oil and sealant from transaxle housing and transaxle case.

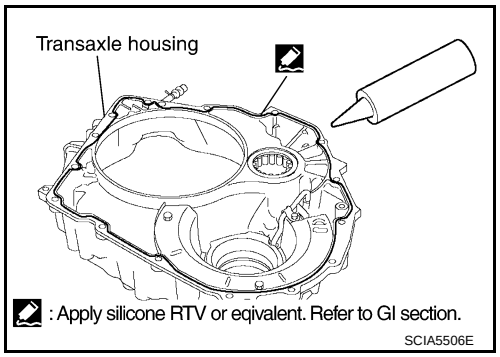

34. Install transaxle housing in transaxle case.
35. Tighten transaxle housing and transaxle case bolts to specified torque. Refer to AT-225, "Component".
CAUTION:
Do not reuse seal bolts.

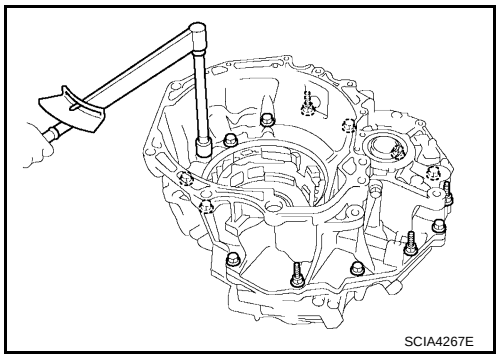

Bolt symbol	Length mm (in)	Number of bolts
A	30 (1.18)	13
B	35 (1.38)	2
C	45 (1.77)	1
D*	—	1

*:Torx bolt

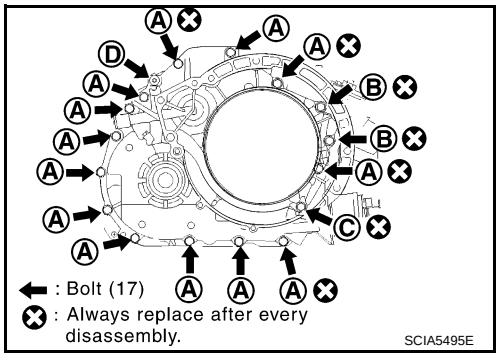

36. Install new oil seal into oil pump assembly until it is flush using Tool.

Tool number : ST30720000 (J-25405)

CAUTION:
- **Do not reuse oil seal.**
- **Apply ATF to oil seal.**

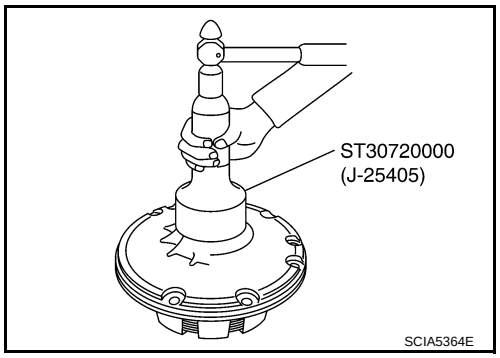

37. Install thrust washer and one- way clutch outer race sub assembly in oil pump assembly.
CAUTION:
Apply petroleum jelly to thrust washer.

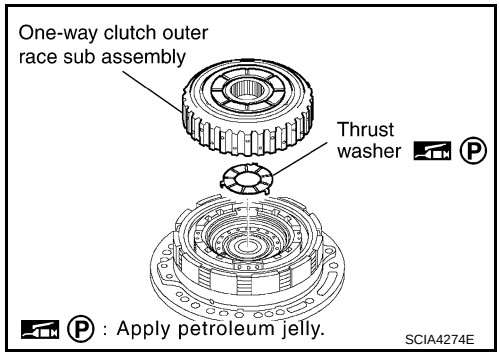

38. Check the distance of “B”.

“B” : 51.09 - 51.71 mm (2.0114 - 2.0358 in)

CAUTION:
If the distance is out of standards, adjust within standards again.

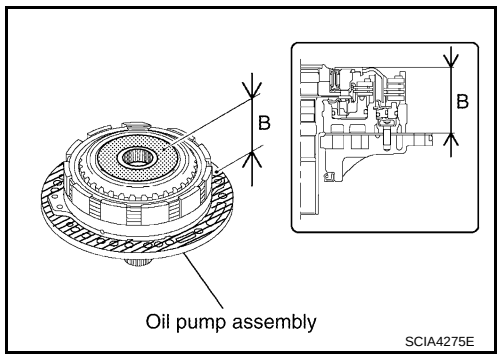

39. Place oil pump assembly through the input shaft in horizontal position, and align the bolt holes of the oil pump assembly with transaxle case. Lightly press oil pump assembly.
CAUTION:
Be careful not to drop one-way clutch outer race sub assembly.

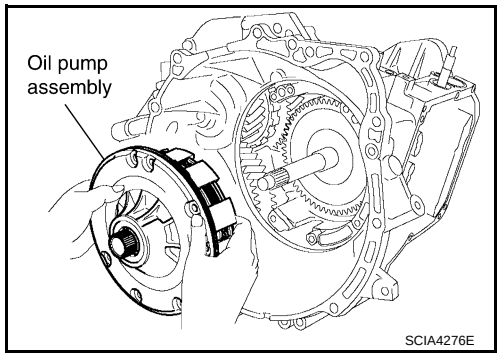

40. Tighten oil pump assembly bolts to specified torque. Refer to AT-225, "Component".

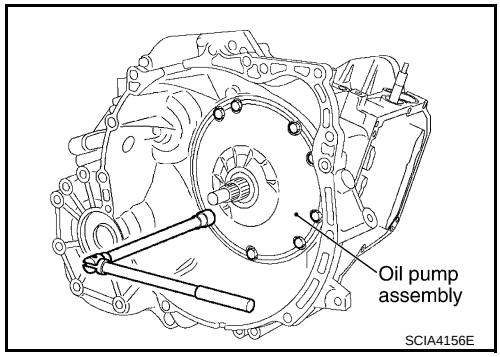

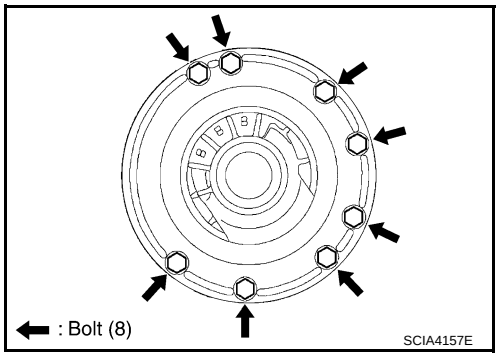

41. Set a dial indicator as shown, move the input shaft and measure the end play.

End play : 0.188 - 0.570 mm (0.0074 - 0.0224 in)

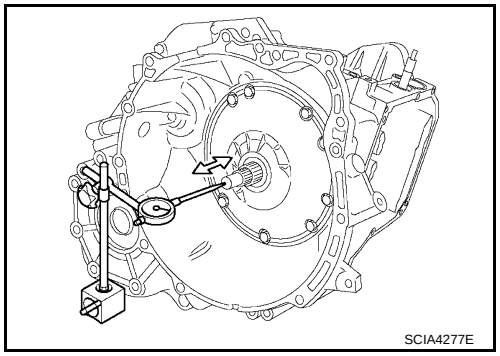

If the end play is out of standards, select another thrust bearing race. Refer to AT-294, "Clutch, Gear and Brakes".

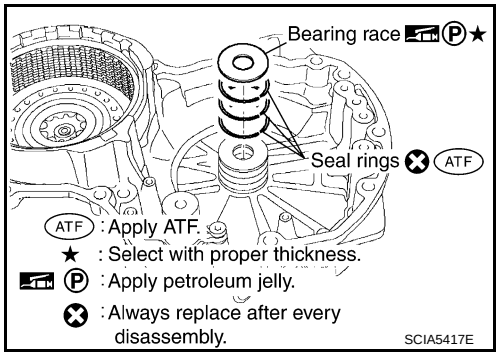

42. Remove transaxle case cover.
43. Apply silicone RTV to transaxle case cover as shown. Refer to GI-42, "Recommended Chemical Product and Sealant".
CAUTION:
Completely remove all moisture, oil and sealant from transaxle case cover and transaxle.

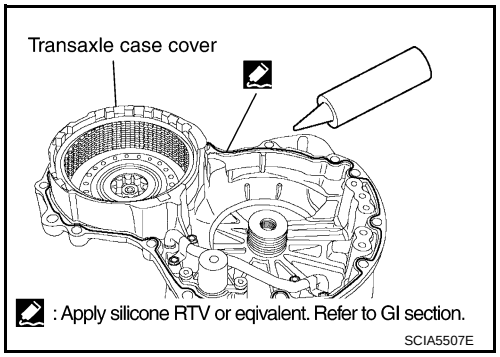

44. Install transaxle case cover in transaxle case.

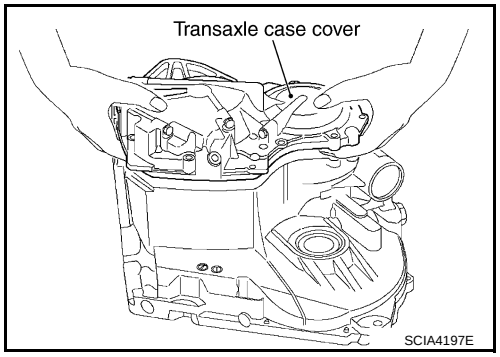

45. Tighten transaxle case cover bolts to specified torque. Refer to AT-225, "Component".
CAUTION:
Do not reuse seal bolts.

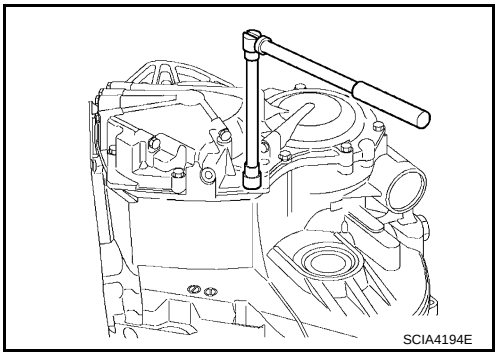

Bolt symbol	Length mm (in)	Number of bolts
A	30 (1.18)	8
B	45 (1.77)	2
C	48 (1.89)	2
D*	—	1

*:Stud bolt

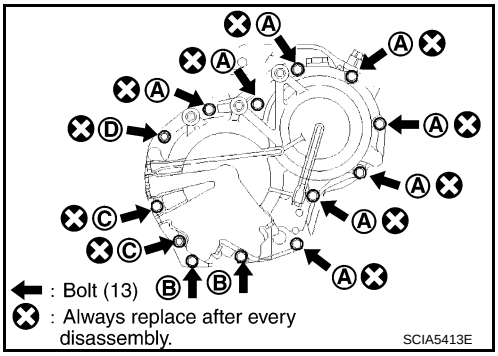

46. Install new governor apply gaskets.
CAUTION:
- **Apply petroleum jelly to governor apply gaskets.**
- **Do not reuse governor apply gaskets.**

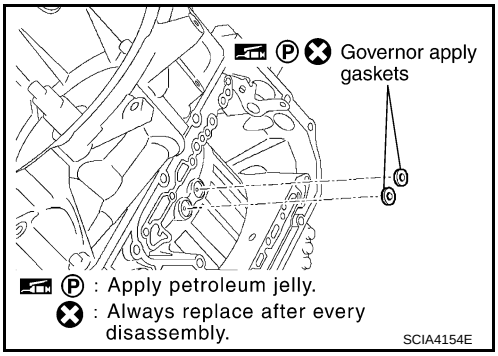

47. Install transmission wire.
CAUTION:
- **Be careful not to break the solenoid connector and A/T fluid temperature sensor.**
- **Apply ATF to O-ring.**

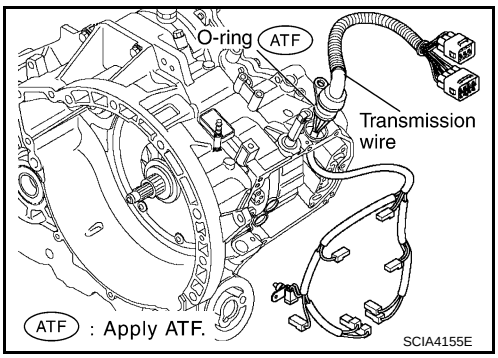

48. While holding control valve assembly, connect the parking lock rod sub assembly to manual valve lever sub assembly.
NOTE:
Shift position is “N”.

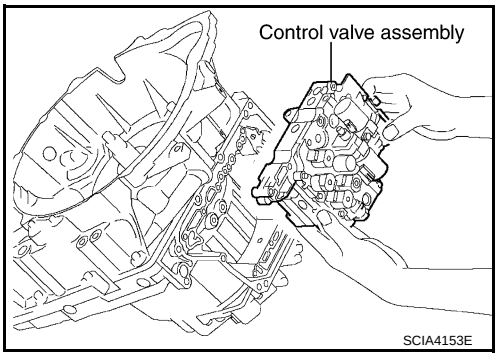

49. Tighten control valve assembly bolts to specified torque. Refer to AT-225, "Component".

Bolt symbol	Length mm (in)	Number of bolts
A	55 (2.17)	2
B	50 (1.97)	2
C	16 (0.63)	2

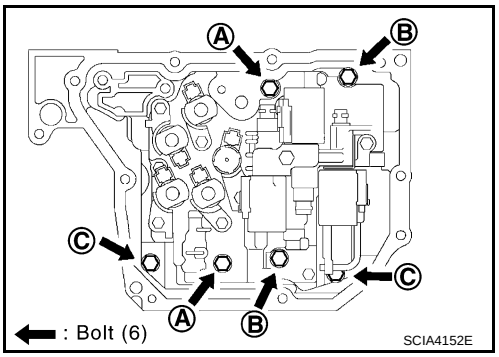

50. Install new suction cover and suction cover gasket in control valve assembly.
CAUTION:
Do not reuse suction cover gasket.

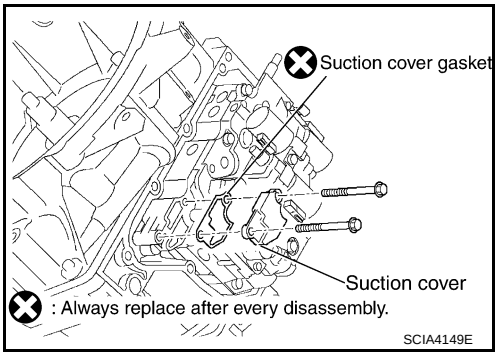

51. Tighten suction cover gasket and suction cover bolts to specified torque. Refer to AT-225, "Component".

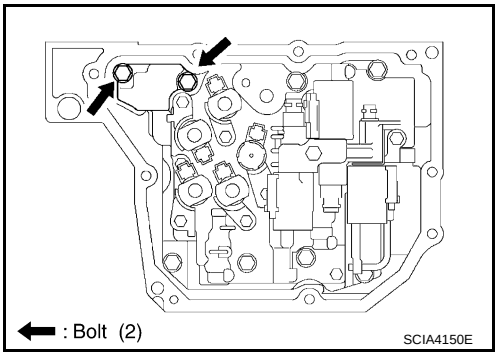

52. Install sensor clamp and A/T fluid temperature sensor in control valve assembly.

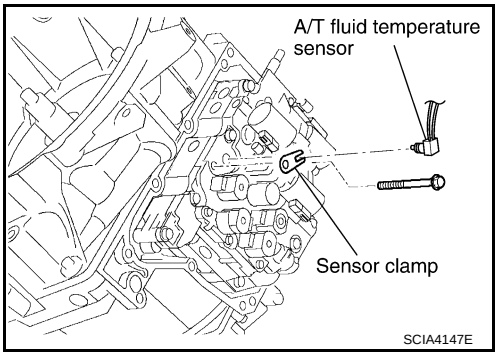

53. Tighten sensor clamp bolt to specified torque. Refer to AT-225, "Component".

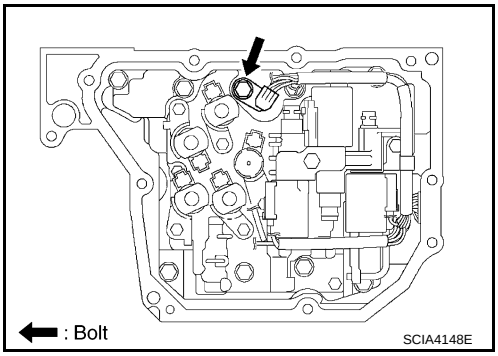

54. Connect the solenoid connectors.

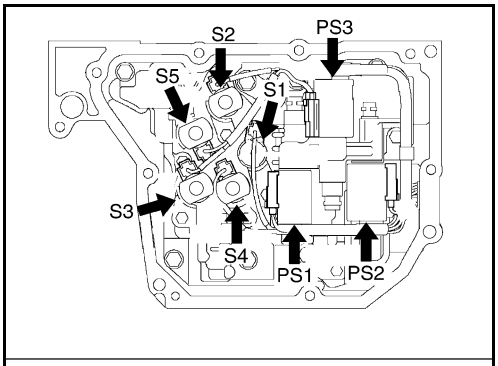

S1 : Shift solenoid valve A
S2 : Shift solenoid valve B
S3 : Shift solenoid valve C
S4 : Shift solenoid valve D
S5 : Shift solenoid valve E
PS1 : Pressure control solenoid valve A
PS2 : Pressure control solenoid valve B
PS3 : Pressure control solenoid valve C

SCIA4146E

55. Apply silicone RTV to side cover as shown. Refer to GI-42, "Recommended Chemical Product and Sealant".

CAUTION:

Completely remove all moisture, oil and sealant from side cover and transaxle case.

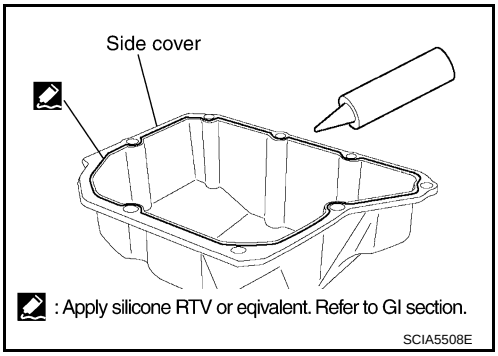

56. Install side cover in transaxle case.

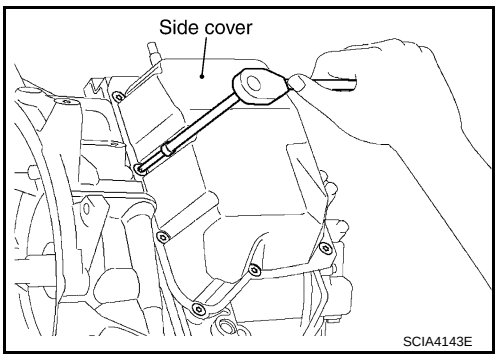

57. Tighten new side cover torx bolts to specified torque. Refer to AT-225, "Component".
CAUTION:
Do not reuse seal bolts.

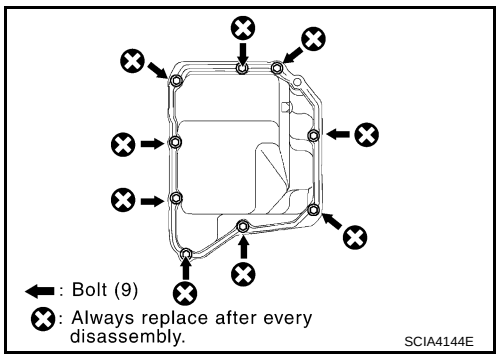

58. Install new O-rings in ATF cooler assembly.
CAUTION:
- **Do not reuse O-rings.**
- **Apply ATF to O-rings.**

59. Install ATF cooler assembly, washer and new spring washer.
CAUTION:
Do not reuse spring washer.

60. Tighten hexagon bolt to specified torque. Refer to AT-225, "Component".

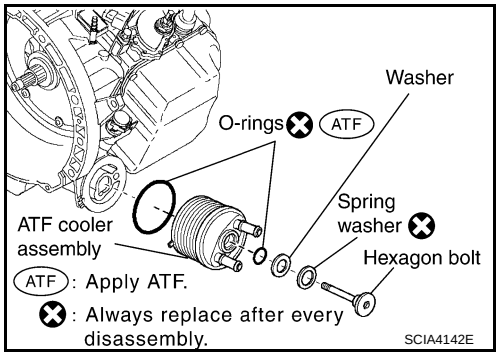

61. Install PNP switch to manual valve lever sub assembly.
62. Temporarily tighten the bolts.

Bolt symbol	Length mm (in)	Number of bolts
A	20 (0.79)	1
B	33 (1.30)	1

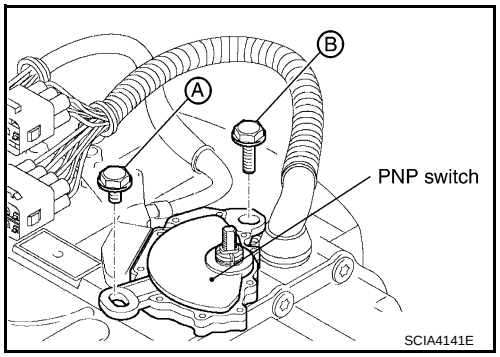

63. Install new washer plate and new lock washer.
CAUTION:
Do not reuse washer plate and lock washer.

64. Tighten nut to specified torque. Refer to AT-225, "Component".

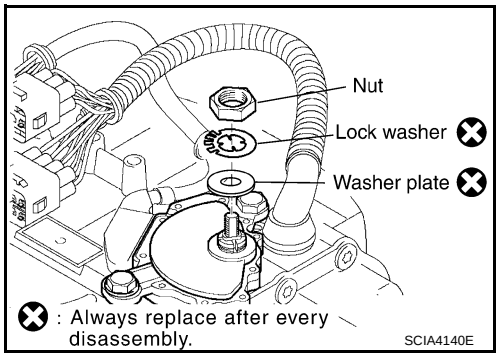

65. Install Tool.

Tool number : KV991J0060 (J-45404)

66. Adjust PNP switch so that Tool pointer aligns with neutral base line on PNP switch body.

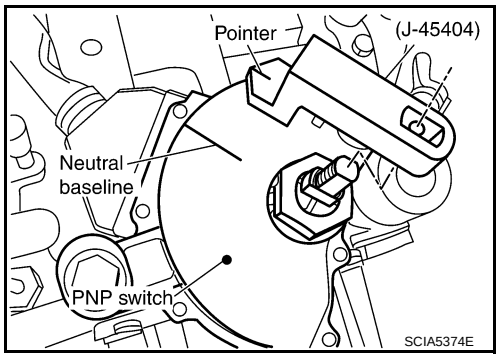

67. Tighten PNP switch torx bolts to specified torque. Refer to AT-225, "Component".

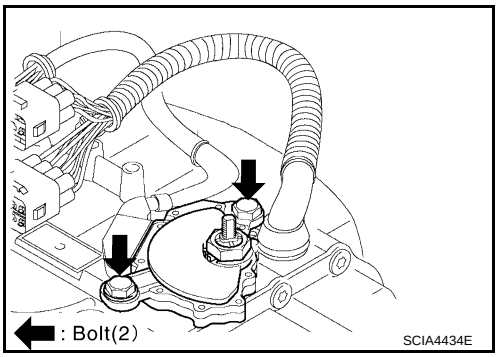

68. Bend the lock washer using suitable tool.

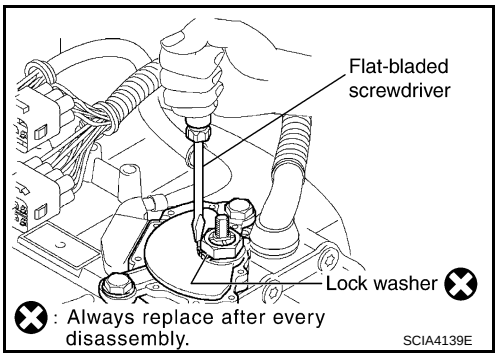

69. Install range lever in manual valve lever sub assembly.
70. Tighten range lever nut to specified torque. Refer to AT-225, "Component".

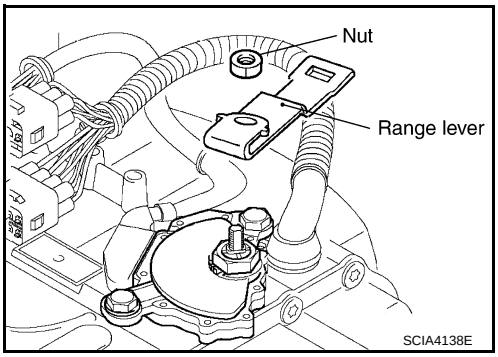

71. Install turbine revolution sensor in transaxle case.
72. Tighten new turbine revolution sensor bolt to specified torque. Refer to AT-225, "Component".
CAUTION:
- **Do not reuse seal bolt.**
- **Apply ATF to O-ring.**

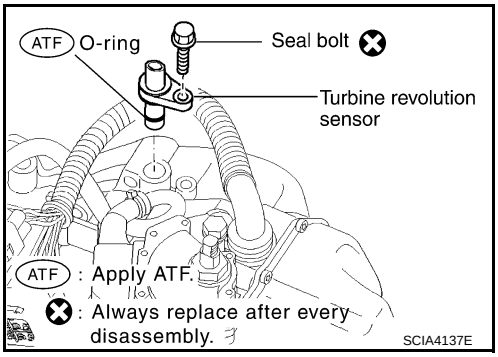

73. Install revolution sensor in transaxle case.
74. Tighten new revolution sensor bolt to specified torque. Refer to AT-225, "Component".
CAUTION:
- **Do not reuse seal bolt.**
- **Apply ATF to O-ring.**

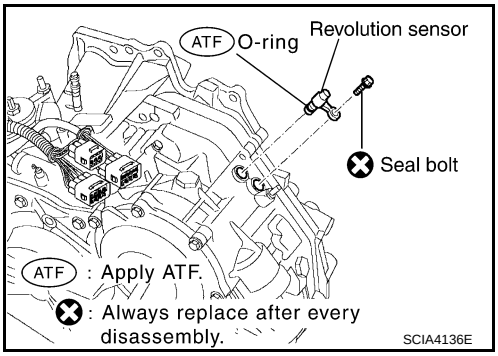

75. Install new O-ring in A/T fluid charging pipe.
    CAUTION:
    - **Do not reuse O-ring.**
    - **Apply petroleum jelly to O-ring.**
76. Install A/T fluid charging pipe in transaxle housing.
77. Install fluid cooler tube with new copper washers.
    CAUTION:
    Do not reuse copper washer.
78. Tighten fluid cooler tube union to specified torque. Refer to AT-225, "Component".
79. Install air breather hose.
80. Install A/T fluid level gauge.

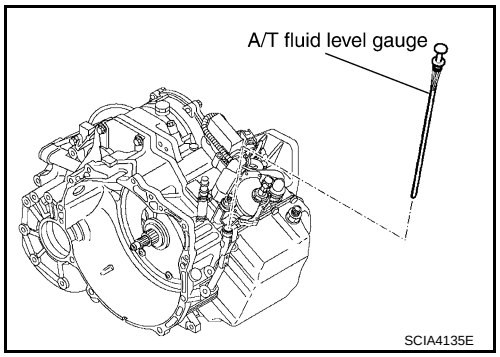

81. Install drain plug and new gasket in transaxle housing.
    CAUTION:
    Do not reuse gasket.
82. Tighten drain plug to specified torque. Refer to AT-225, "Component".
83. Install torque converter.

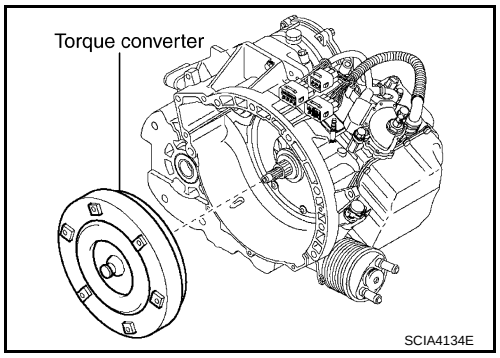

84. Check the distance of “C”.

    “C” : 14.0 mm (0.551 in)

    CAUTION:
    If the distance is out of standards, adjust within standards again.

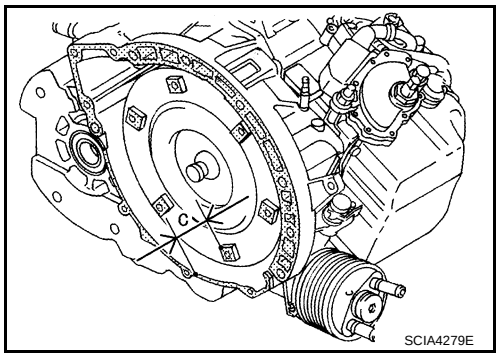

SERVICE DATA AND SPECIFICATIONS (SDS)

General Specification

INFOID:0000000001718112

Engine		VQ35DE
Automatic transaxle model		RE5F22A
Automatic transaxle model code number		CK710
Stall torque ratio		1.8: 1
Transaxle gear ratio	1st	4.657
	2nd	3.032
	3rd	1.982
	4th	1.341
	5th	1.018
	Reverse	5.114
	Final drive	2.269
Recommended fluid		Genuine NISSAN Matic K ATF *
Fluid capacity		7.4 ℓ (7-7/8 US qt, 6-1/2 Imp qt)

CAUTION:
- **Use only Genuine Nissan Matic K ATF. Do not mix with other fluid.**
- **Using automatic transaxle fluid other than Genuine Nissan Matic K ATF will deteriorate in driveability and automatic transaxle durability, and may damage the automatic transaxle, which is not covered by the warranty.**

*: Refer to MA-11.

Shift Schedule

INFOID:0000000001718113

VEHICLE SPEED WHEN SHIFTING GEARS

Accelerator angle	Vehicle speed km/h (MPH) (Approx.)							
	$D_1 \rightarrow D_2$	$D_2 \rightarrow D_3$	$D_3 \rightarrow D_4$	$D_4 \rightarrow D_5$	$D_5 \rightarrow D_4$	$D_4 \rightarrow D_3$	$D_3 \rightarrow D_2$	$D_2 \rightarrow D_1$
100 %	67 (42)	105 (65)	170 (106)	241 (150)	230 (143)	160 (99)	92 (57)	45 (28)
90 %	67 (42)	105 (65)	170 (106)	241 (150)	230 (143)	160 (99)	92 (57)	45 (28)
80 %	65 (40)	100 (62)	152 (94)	227 (141)	178 (111)	142 (88)	86 (53)	45 (28)
70 %	53 (33)	80 (50)	125 (78)	185 (115)	147 (91)	137 (85)	68 (42)	38 (24)
60 %	46 (29)	71 (44)	106 (66)	156 (97)	108 (67)	78 (48)	46 (29)	22 (14)
50 %	43 (27)	67 (42)	97 (60)	145 (90)	98 (61)	68 (42)	40 (25)	18 (11)
40 %	38 (24)	60 (37)	89 (55)	130 (81)	89 (55)	56 (35)	30 (19)	13 (8)
30 %	33 (21)	50 (31)	70 (43)	108 (67)	68 (42)	45 (28)	25 (16)	12 (7)
20 %	23 (14)	35 (22)	49 (30)	77 (48)	49 (30)	32 (20)	22 (14)	8 (5)
10 %	17 (11)	29 (18)	39 (24)	58 (36)	44 (27)	32 (20)	22 (14)	8 (5)

VEHICLE SPEED WHEN PERFORMING AND RELEASING COMPLETE LOCK-UP

Accelerator angle	Vehicle speed km/h (MPH) (Approx.)	
	Lock-up “ON”	Lock-up “OFF”
50 %	190 (118)	137 (85)
15%	101 (63)	72 (45)
0 - 8 %	73 (45)	70 (43)

- Lock-up vehicle speed indicates the speed in D position.
- Perform lock-up inspection after warming up engine.
- Lock-up vehicle speed may vary depending on the driving conditions and circumstances.

VEHICLE SPEED WHEN PERFORMING AND RELEASING SLIP LOCK-UP

Accelerator angle	Gear position	Vehicle speed km/h (MPH) (Approx.)	
		Slip lock-up “ON”	Slip lock-up “OFF”
0 - 10 %	4th	45 (28)	42 (26)
	5th	58 (36)	55 (34)

- Slip lock-up vehicle speed indicates the speed in D position.
- Perform slip lock-up inspection after warming up engine.
- Slip lock-up vehicle speed may vary depending on the driving conditions and circumstances.

Stall Speed

INFOID:0000000001718114

Stall speed	2,430 - 2,730 rpm

Line Pressure

INFOID:0000000001718115

Engine speed	Line pressure kPa (kg/cm^2, psi)	
	D, L positions	R position
At idle speed	333 - 392 (3.4 - 4.0, 48 - 57)	500 - 608 (5.1 - 6.2, 73 - 88)
At stall speed	1,285 - 1,393 (13.1 - 14.2, 186 - 202)	1,706 - 1,981 (17.4 - 20.2, 247 - 287)

Time Lag

INFOID:0000000001718116

Selector lever	Time
N to D position	Less than 0.7 sec.
N to R position	Less than 1.2 sec.

Shift Solenoid Valves

INFOID:0000000001718117

Shift position	Shift solenoid valve					Remarks
	A	B	C	D	E	
P	OFF (Open)	OFF (Closed)	OFF (Closed)	OFF (Open)	OFF (Closed)	PARK POSITION
R	OFF (Open)	OFF (Closed)	ON (Open)	OFF (Open)	ON (Open)	REVERSE POSITION
N	OFF (Open)	OFF (Closed)	OFF (Closed)	OFF (Open)	OFF (Closed)	NEUTRAL POSITION

Shift position		Shift solenoid valve					Remarks
		A	B	C	D	E	
D	1st	ON (Closed)	ON (Open)	ON (Open)	OFF (Open)	OFF (Closed)	Automatic shift 1 ⇔ 2 ⇔ 3 ⇔ 4 ⇔ 5
	1 ⇔ 2	OFF (Open)	OFF (Closed)	ON (Open)	OFF (Open)	OFF (Closed)	
	2nd	OFF (Open)	OFF (Closed)	ON (Open)	OFF (Open)	OFF (Closed)	
	2 ⇔ 3	OFF (Open)	OFF (Closed)	ON (Open)	ON (Closed)	ON (Open)	
	3rd	OFF (Open)	OFF (Closed)	ON (Open)	ON (Closed)	OFF (Closed)	
	3 ⇔ 4	OFF (Open)	OFF (Closed)	OFF (Closed)	ON (Closed)	ON (Open)	
	4th	OFF (Open)	OFF (Closed)	OFF (Closed)	ON (Closed)	OFF (Closed)	
	4 ⇔ 5	OFF (Open)	ON (Open)	OFF (Closed)	ON (Closed)	OFF (Closed)	
	5th	OFF (Open)	ON (Open)	OFF (Closed)	ON (Closed)	OFF (Closed)	
L	1st	ON (Closed)	ON (Open)	ON (Open)	OFF (Open)	OFF (Closed)	Automatic shift 1 ⇔ 2 ⇔ 3
	1 ⇔ 2	OFF (Open)	OFF (Closed)	ON (Open)	OFF (Open)	OFF (Closed)	
	2nd	OFF (Open)	OFF (Closed)	ON (Open)	OFF (Open)	OFF (Closed)	
	2 ⇔ 3	OFF (Open)	OFF (Closed)	ON (Open)	ON (Closed)	ON (Open)	
	3rd	OFF (Open)	OFF (Closed)	ON (Open)	ON (Closed)	OFF (Closed)	

NOTE:

When shifting D to L position or lever switch sets in “ON” position (indicated O/D OFF indicator lamp), down shift permission control is activated. Refer to AT-33, "Shift Control".

Solenoid Valves

INFOID:0000000001718118

Solenoid valves	Resistance (Approx.)	Connector (Color)	Terminal
Shift solenoid valve A	11 - 16 Ω	F30 (BR)	2
Shift solenoid valve B		F62(GR)	1
Shift solenoid valve C		F62(GR)	4
Shift solenoid valve D		F30 (BR)	1
Shift solenoid valve E		F30 (BR)	5
Pressure control solenoid valve A	5.0 - 5.6 Ω	F62(GR)	3 - 6
Pressure control solenoid valve B		F30 (BR)	3 - 7
Pressure control solenoid valve C		F62(GR)	2 - 5

Specified resistance at 20°C (68°F).

Clutch, Gear and Brakes

INFOID:0000000001718119

2ND BRAKE

Number of 2nd brake plates	4	
Number of 2nd brake discs	4	
Number of 2nd brake flange	1	
Piston stroke mm (in)	1.10 - 1.50 (0.0433 - 0.0591)	
Thickness of 2nd brake flanges	Thickness mm (in)	Part number*
	3.6 (0.142) 3.8 (0.150) 4.0 (0.157)	31537 8Y011 31537 8Y012 31537 8Y013

*: Always check with the Parts Department for the latest parts information.

2ND COAST BRAKE

Number of 2nd coast brake plates	3
Number of 2nd coast brake discs	3
Number of 2nd coast brake flange	1
Piston stroke mm (in)	0.76 - 1.44 (0.0299 - 0.0567)

B5 BRAKE

Number of B5 brake plates	6	
Number of B5 brake discs	6	
Number of B5 brake flange	1	
Number of B5 brake cushion plate	1	
Piston stroke mm (in)	2.34 - 2.70 (0.0921 - 0.1063)	
Thickness of B5 brake flanges	Thickness mm (in)	Part number*
	5.0 (0.197)	31667 8Y016
	5.1 (0.202)	31667 8Y017
	5.2 (0.205)	31667 8Y018
	5.3 (0.209)	31667 8Y019
	5.5 (0.217)	31667 8Y020

*: Always check with the Parts Department for the latest parts information.

1ST AND REVERSE BRAKE

Number of 1st and reverse brake plates	4
Number of 1st and reverse brake discs	5
Number of 1st and reverse brake flanges	2
Piston stroke mm (in)	1.39 - 2.21 (0.0547 - 0.0870)

FORWARD AND DIRECT CLUTCH ASSEMBLY

Thickness of thrust washer races	Thickness mm (in)	Part number*
	0.81 (0.0319)	31435 8Y060
	0.90 (0.0350)	31435 8Y061
	1.00 (0.0400)	31435 8Y062
	1.10 (0.0430)	31435 8Y063
	1.20 (0.0470)	31435 8Y064
	1.30 (0.0510)	31435 8Y065
	1.40 (0.0550)	31435 8Y066
	1.50 (0.0590)	31435 8Y067
End play mm (in)	0.188 - 0.570 mm (0.0074 - 0.0224)	

*: Always check with the Parts Department for the latest parts information.

U/D BRAKE

Piston type	Mark	Piston length mm (in)	Part number*
A	—	63.7 (2.508)	31615 8Y005
B	1	64.2 (2.528)	31615 8Y004
C	2	64.7 (2.547)	31615 8Y003
D	3	65.2 (2.567)	31615 8Y002
E	4	65.7 (2.587)	31615 8Y001
Piston stroke mm (in)		5.76 - 6.76 mm (0.2268 - 0.2661)	

*: Always check with the Parts Department for the latest parts information.

U/D RR PLANETARY RING GEAR SUB ASSEMBLY

	Thickness mm (in)	Part number*
Thickness of adjust shims	0.81 (0.0319)	31435 8Y100
	0.90 (0.0350)	31435 8Y101
	1.00 (0.0400)	31435 8Y102
	1.10 (0.0430)	31435 8Y103
	1.20 (0.0470)	31435 8Y104
	1.30 (0.0510)	31435 8Y105
	1.40 (0.0550)	31435 8Y106
	1.50 (0.0590)	31435 8Y107
	1.60 (0.0630)	31435 8Y108

*: Always check with the Parts Department for the latest parts information.

U/D GEAR ASSEMBLY

	Thickness mm (in)	Part number*
Thickness of thrust washer races	0.80 (0.0310)	31435 8Y021
	0.90 (0.0350)	31435 8Y068
	1.00 (0.0400)	31435 8Y069
	1.10 (0.0430)	31435 8Y070
	1.20 (0.0470)	31435 8Y071
	1.30 (0.0510)	31435 8Y072
	1.40 (0.0550)	31435 8Y073
	1.50 (0.0590)	31435 8Y074

*: Always check with the Parts Department for the latest parts information.

PLANETARY SUN GEAR SUB ASSEMBLY

Inner diameter of planetary sun gear sub assembly bushing mm (in)	Standard	22.200 - 22.226 (0.8740 - 0.8750)
	Allowable limit	22.276 (0.8770)

PLANETARY GEAR ASSEMBLY

Inner diameter of planetary gear assembly bushing mm (in)	Standard	30.056 - 30.082 (1.1833 - 1.1843)
	Allowable limit	30.132 (1.1863)

Final Drive

INFOID:0000000001718120

DIFFERENTIAL SIDE BEARING ADJUSTING SHIMS

Thickness mm (in)	Part number*	Thickness mm (in)	Part number*
1.00 (0.0394)	31438 8Y001	1.48 (0.0583)	31438 8Y013
1.05 (0.0413)	31438 8Y002	1.51 (0.0594)	31438 8Y014
1.10 (0.0433)	31438 8Y003	1.54 (0.0606)	31438 8Y015
1.15 (0.0453)	31438 8Y004	1.57 (0.0618)	31438 8Y016
1.20 (0.0472)	31438 8Y005	1.60 (0.0630)	31438 8Y017
1.25 (0.0492)	31438 8Y006	1.65 (0.0650)	31438 8Y018
1.30 (0.0512)	31438 8Y007	1.70 (0.0669)	31438 8Y019
1.33 (0.0524)	31438 8Y008	1.75 (0.0689)	31438 8Y020
1.36 (0.0535)	31438 8Y009	1.80 (0.0709)	31438 8Y021
1.39 (0.0547)	31438 8Y010	1.85 (0.0728)	31438 8Y022
1.42 (0.0559)	31438 8Y011	1.90 (0.0748)	31438 8Y023
1.45 (0.0571)	31438 8Y012		

*: Always check with the Parts Department for the latest parts information.

TURNING TORQUE

Turning torque of final drive assembly	0.7 - 1.2 N·m (0.08 - 0.12kg-m, 7 - 10 in-lb)

A/T Fluid Temperature Sensor

INFOID:0000000001718121

Condition		Voltage (Approx.)	Resistance (Approx.)
ATF temperature	0°C (32°F)	4.0V	9.8 kΩ
	20°C (68°F)	3.0V	4.2 kΩ
	80°C (176°F)	0.8V	0.54 kΩ
	100°C (212°F)	0.5V	0.31 kΩ

Turbine Revolution Sensor

INFOID:0000000001718122

Condition	Signal	Voltage* (Approx.)
Connect 12V power supply and 100 Ω resistance, and then shake magnetic body.	HIGH	1.2 - 1.6V
	LOW	0.4 - 0.8V

*: Voltage with both end of 100 Ω resistance.

Revolution Sensor

INFOID:0000000001718123

Condition	Signal	Voltage* (Approx.)
Connect 12V power supply and 100 Ω resistance, and then shake magnetic body.	HIGH	1.2 - 1.6V
	LOW	0.4 - 0.8V

*: Voltage with both end of 100 Ω resistance.