MANUAL TRANSMISSION

SECTION MT

CONTENTS

CONTENTS (Cont'd)

Special Service Tools

NGMT0045

The actual shapes of Kent-Moore tools may differ from those of special service tools illustrated here.

Tool number (Kent-Moore No.) Tool name	Description	
ST23810001 (—) Adapter setting plate	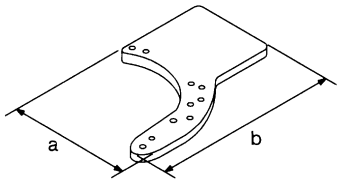 NT407	Fixing adapter plate with gear assembly **a: 166 mm (6.54 in)** **b: 270 mm (10.63 in)**
KV32101330 (See J26349-A) Puller	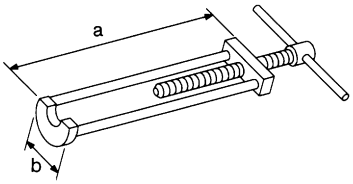 NT408	Removing overdrive mainshaft bearing **a: 447 mm (17.60 in)** **b: 100 mm (3.94 in)**
KV31100401 (—) Transmission press stand	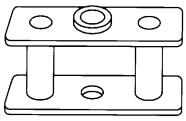 NT068	Pressing counter gear and mainshaft
ST22520000 (J26348) Wrench	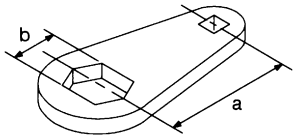 NT409	Tightening mainshaft lock nut **a: 100 mm (3.94 in)** **b: 41 mm (1.61 in)**
ST23540000 (J25689-A) Pin punch	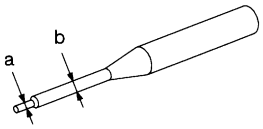 NT442	Removing and installing fork rod retaining pin **a: 2.3 mm (0.091 in) dia.** **b: 4 mm (0.16 in) dia.**
ST30031000 (J22912-01) Puller	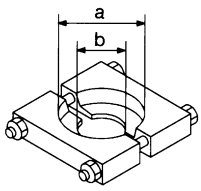 NT411	Removing and installing 1st gear bushing Removing main drive gear bearing **a: 90 mm (3.54 in) dia.** **b: 50 mm (1.97 in) dia.**
ST23860000 (—) Drift	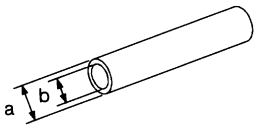 NT065	Installing counter drive gear **a: 38 mm (1.50 in) dia.** **b: 33 mm (1.30 in) dia.**
ST22360002 (J25679-01) Drift	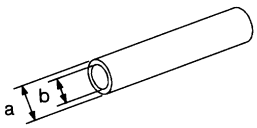 NT065	Installing counter gear front and rear end bearings **a: 29 mm (1.14 in) dia.** **b: 23 mm (0.91 in) dia.**

Special Service Tools (Cont'd)

Tool number (Kent-Moore No.) Tool name	Description	
ST22350000 (J25678-01) Drift	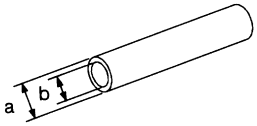 NT065	Installing OD gear bushing **a: 34 mm (1.34 in) dia.** **b: 28 mm (1.10 in) dia.**
ST23800000 (J25691-01) Drift	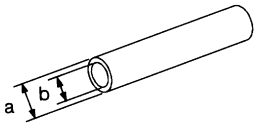 NT065	Installing front cover oil seal **a: 44 mm (1.73 in) dia.** **b: 31 mm (1.22 in) dia.**
ST33400001 (J26082) Drift	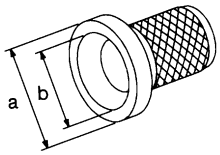 NT086	Installing rear oil seal **a: 60 mm (2.36 in) dia.** **b: 47 mm (1.85 in) dia.**
ST33290001 (J34286) Puller	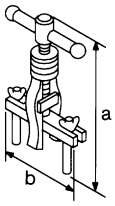 NT414	Removing rear oil seal **a: 250 mm (9.84 in)** **b: 160 mm (6.30 in)**
ST30720000 (J25405) Drift	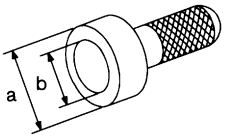 NT115	Installing mainshaft ball bearing **a: 77 mm (3.03 in) dia.** **b: 55.5 mm (2.185 in) dia.**
ST30613000 (J25742-3) Drift	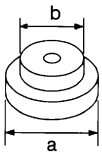 NT073	Installing main drive gear bearing **a: 71.5 mm (2.815 in) dia.** **b: 47.5 mm (1.870 in) dia.**
ST33200000 (J26082) Drift	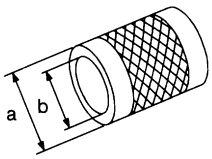 NT091	Installing counter rear bearing **a: 60 mm (2.36 in) dia.** **b: 44.5 mm (1.752 in) dia.**
(J-26349-A) Bearing Remover and Puller Set	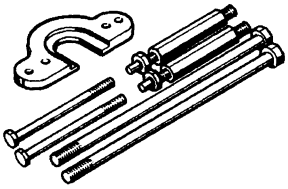 WMT065	Removing and installing mainshaft bearing (Use with J-25726-B)

Tool number (Kent-Moore No.) Tool name	Description	
(J-34286) Rear Race Puller	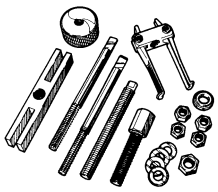 WMT066	Removing races
(J-39856) Gear and Bearing Removal Kit	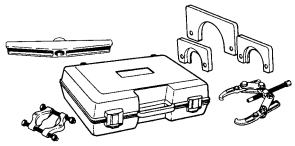 WMT067	Removing gears and bearing

Commercial Service Tools

NGMT0046

Tool name	Description	
Puller	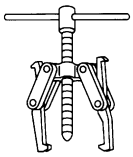 NT077	Removing counter bearings, counter drive and OD gears
Drift	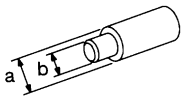 NT074	Installing countershaft rear end bearing **a: 40 mm (1.57 in) dia.** **b: 30 mm (1.18 in) dia.**

NVH Troubleshooting Chart

NGMT0047S01

Use the chart below to help you find the cause of the symptom. The numbers indicate the order of the inspection. If necessary, repair or replace these parts.

MANUAL TRANSMISSION

NGMT0047S0101

Reference page			Refer to ***MA-38***, "Checking M/T Oil".		MT-11	MT-11	MT-13	MT-13	MT-12	MT-12	MT-12	MT-12
SUSPECTED PARTS (Possible cause)		OIL (Oil level is low.)	OIL (Wrong oil.)	OIL (Oil level is high.)	GASKET (Damaged)	OIL SEAL (Worn or damaged)	CHECK PLUG RETURN SPRING AND CHECK BALL (Worn or damaged)	SHIFT FORK (Worn)	GEAR (Worn or damaged)	BEARING (Worn or damaged)	BAULK RING (Worn or damaged)	INSERT SPRING (Damaged)
Symptom	Noise	1	2						3	3		
	Oil leakage		3	1	2	2						
	Hard to shift or will not shift		1	1							2	2
	Jumps out of gear						1	2	2			

Cross-sectional View

NGMT0048S01

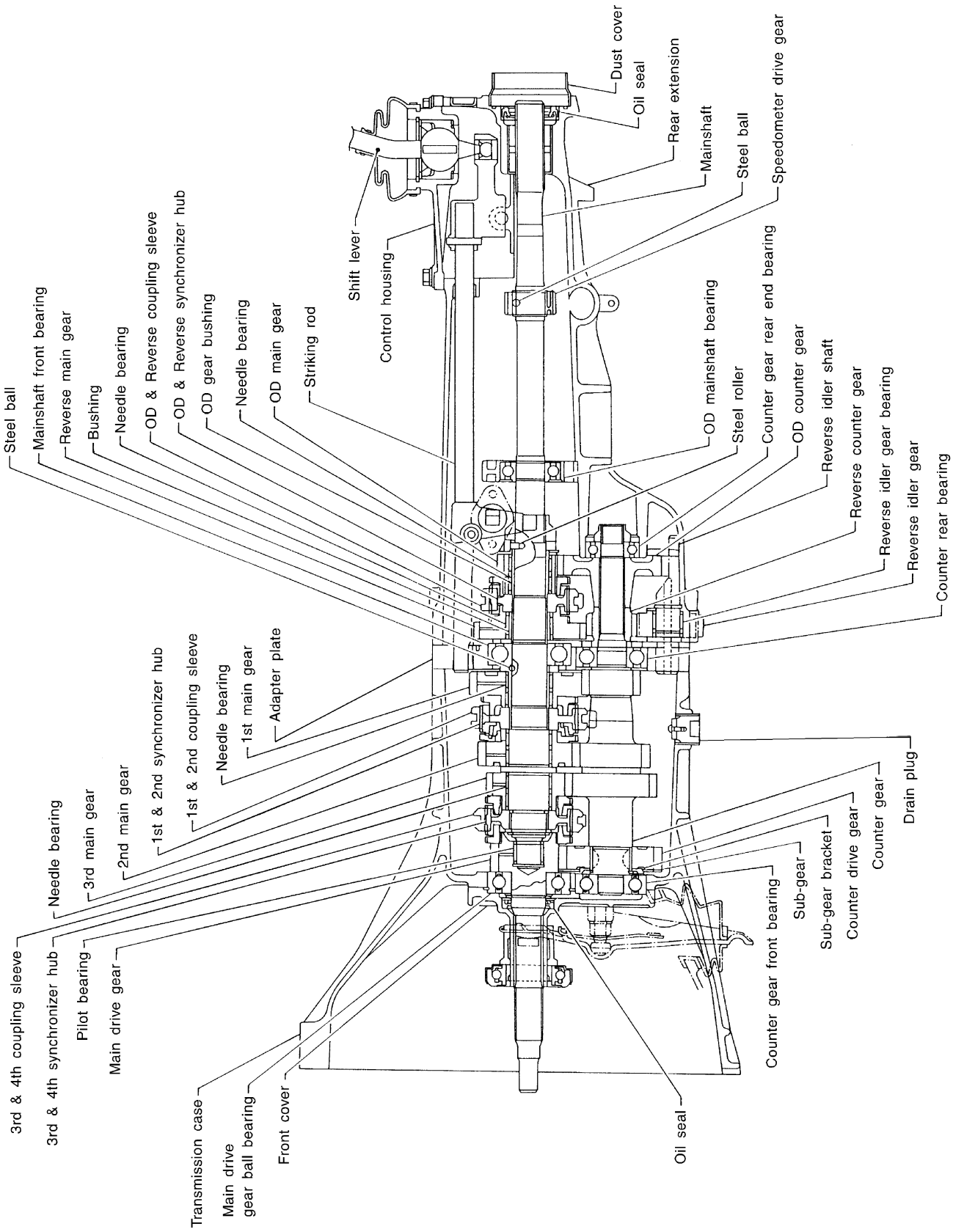

SMT153D

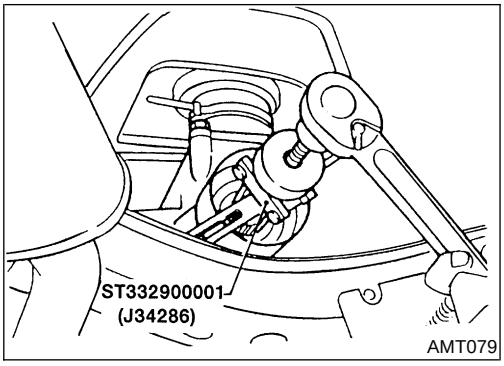

Replacing Rear Oil Seal

NGMT0028

REMOVAL

NGMT0028S01

1. Remove the propeller shaft. Refer to ***PD-8***, “Removal and Installation”.
2. Remove rear oil seal using Tool.

- **Always replace with a new seal once it has been removed.**

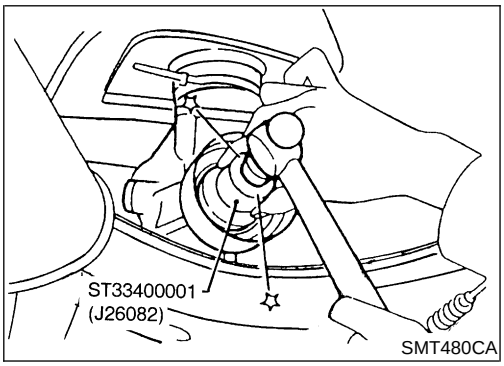

INSTALLATION

NGMT0028S02

1. Install new oil seal until it stops.

- **Apply multi-purpose grease to seal lip of oil seal before installing.**

2. Install any part removed.

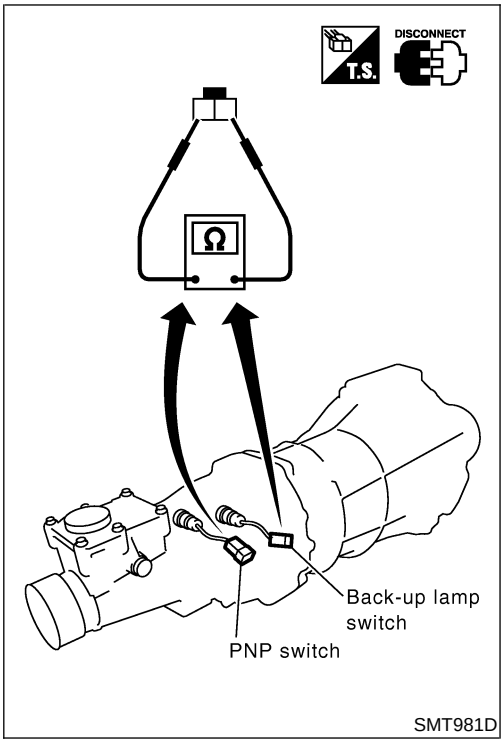

Position Switch Check

NGMT0029

- Check continuity.

Switch	Gear position	Continuity
Back-up lamp switch	Reverse	Yes
	Except reverse	No
Park/neutral position (PNP) switch	Neutral	Yes
	Except neutral	No

Removal

NGMT0030S01

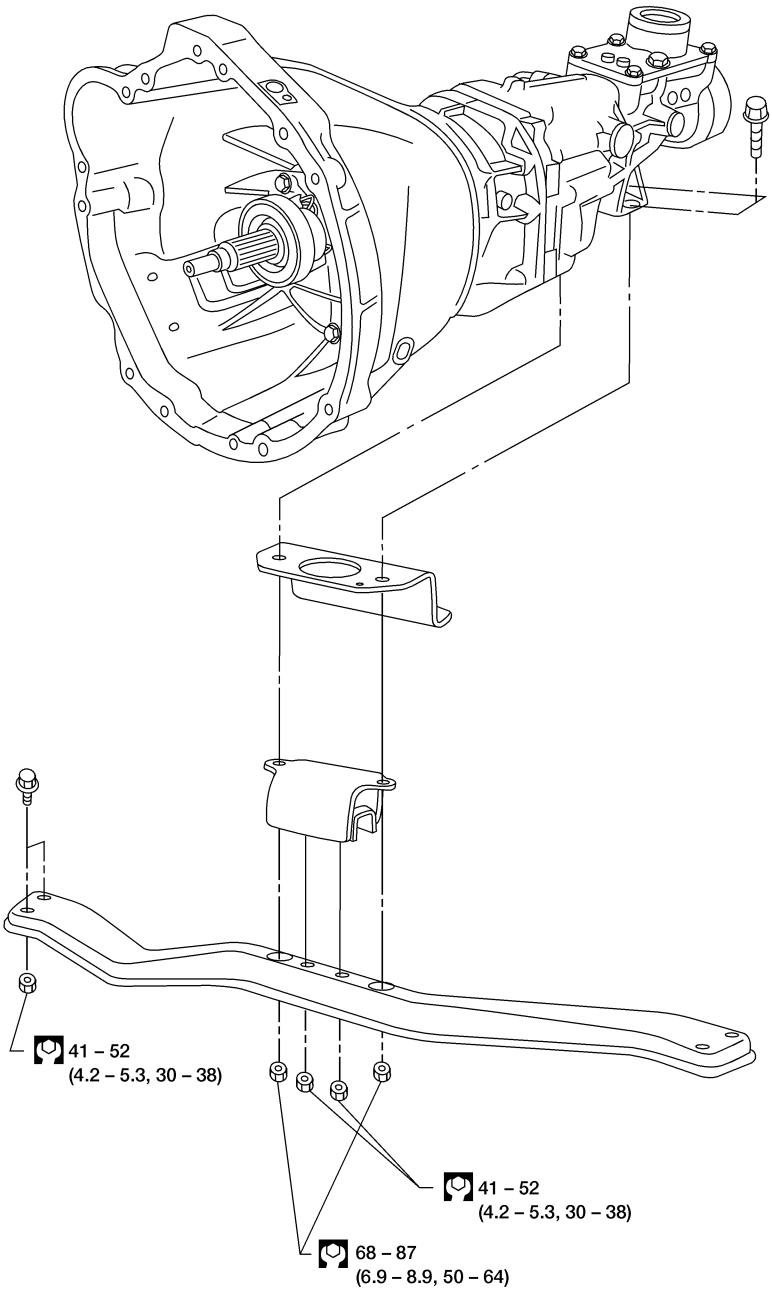

: N·m (kg-m, ft-lb)

WMT030

CAUTION:
Before separating the transmission from the engine, remove the crankshaft position sensor (OBD) from the transmission. Be careful not to damage sensor edge or ring gear teeth.

NOTE:
To prevent oil spills, drain transmission oil before removing transmission or insert plug into rear oil seal after removing propeller shaft.

- **Be careful not to damage spline, sleeve yoke and rear oil seal when removing propeller shaft.**

1. Remove the battery negative terminal.
2. Remove the crankshaft position sensor (OBD) from the transmission upper side.
3. Remove the clutch operating cylinder from the transmission.
4. Disconnect the vehicle speed sensor, back-up switch, and park/neutral position (PNP) switch harness connectors.
5. Remove the starter motor from the transmission.
6. Disconnect the exhaust hanger.
7. Remove the propeller shaft. Refer to ***PD-8***, "Removal and Installation".

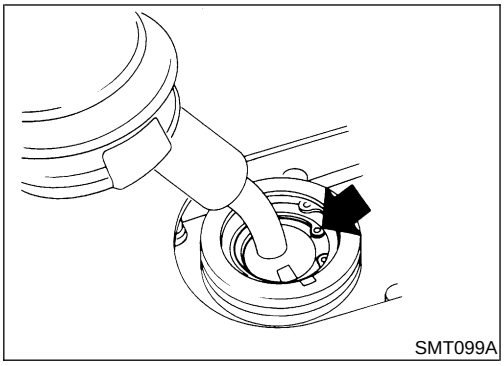
SMT099A

8. Remove the shift lever.
9. Support the engine by placing a jack under the oil pan.
- **Do not place jack under oil pan drain plug.**

10. Remove the transmission crossmember.
11. Separate the transmission from the engine.

WARNING:
Support manual transmission while removing it.

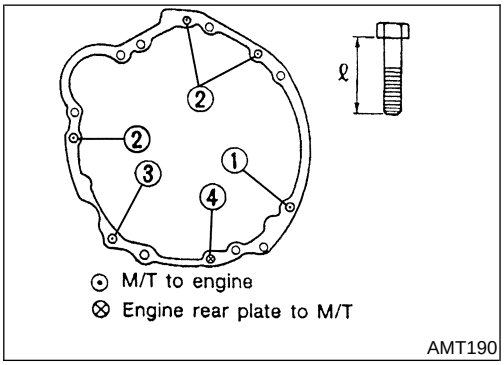

AMT190

Installation

NGMT0030S02

1. Tighten bolts securing transmission.

Bolt No.	Tightening torque N·m (kg-m, ft-lb)	ℓ mm (in)
1	40 - 49 (4.0 - 5.0, 29 - 36)	65 (2.56)
2	40 - 49 (4.0 - 5.0, 29 - 36)	58 (2.28)
3*	16 - 21 (1.6 - 2.2, 12 - 15)	25 (0.98)
4	16 - 21 (1.6 - 2.2, 12 - 15)	16 (0.63)

*: With nut

2. Installation is in the reverse order of removal.

Case Components

NGMT0031S01

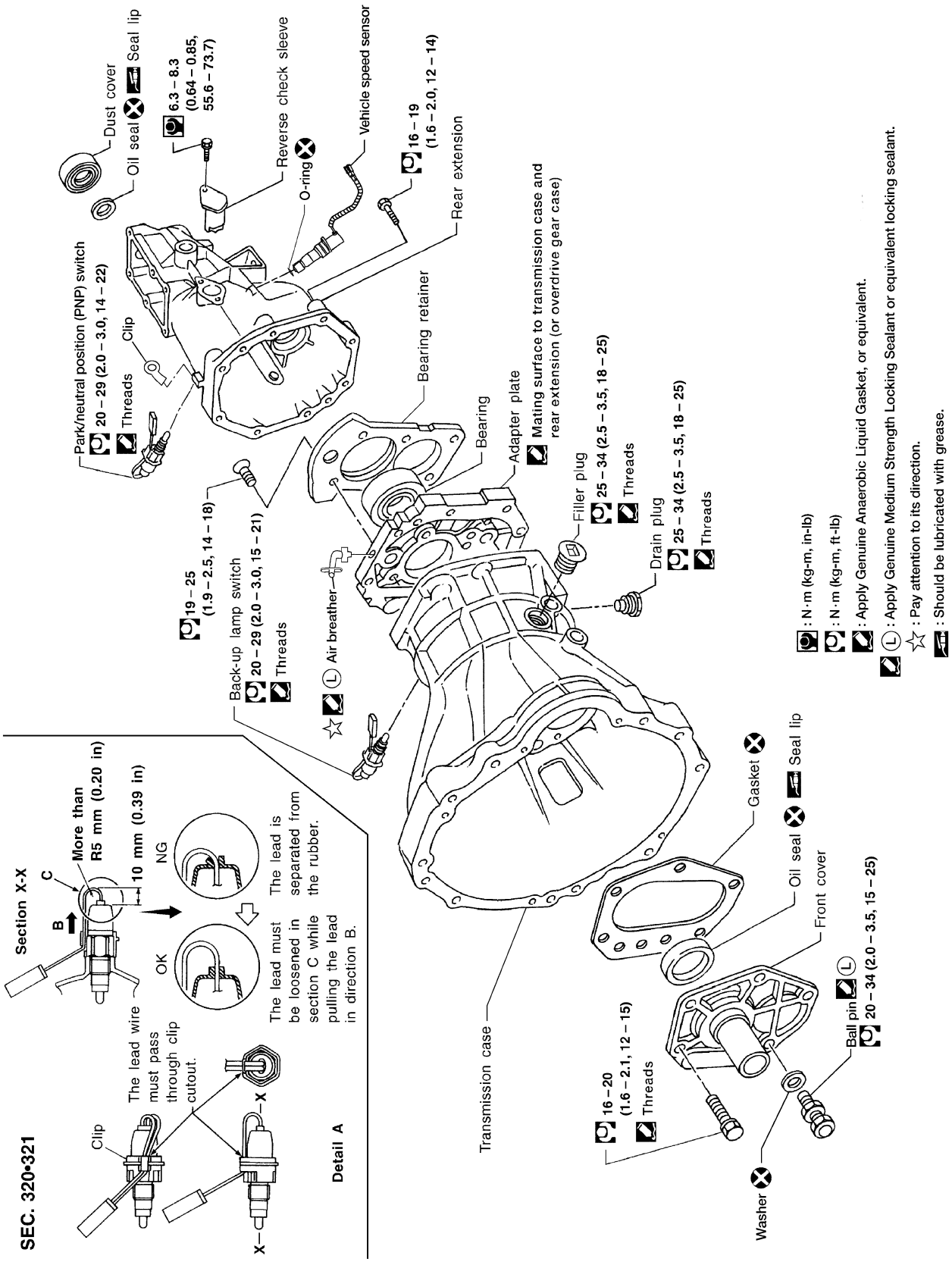

WMT062

Gear Components

NGMT0031S02

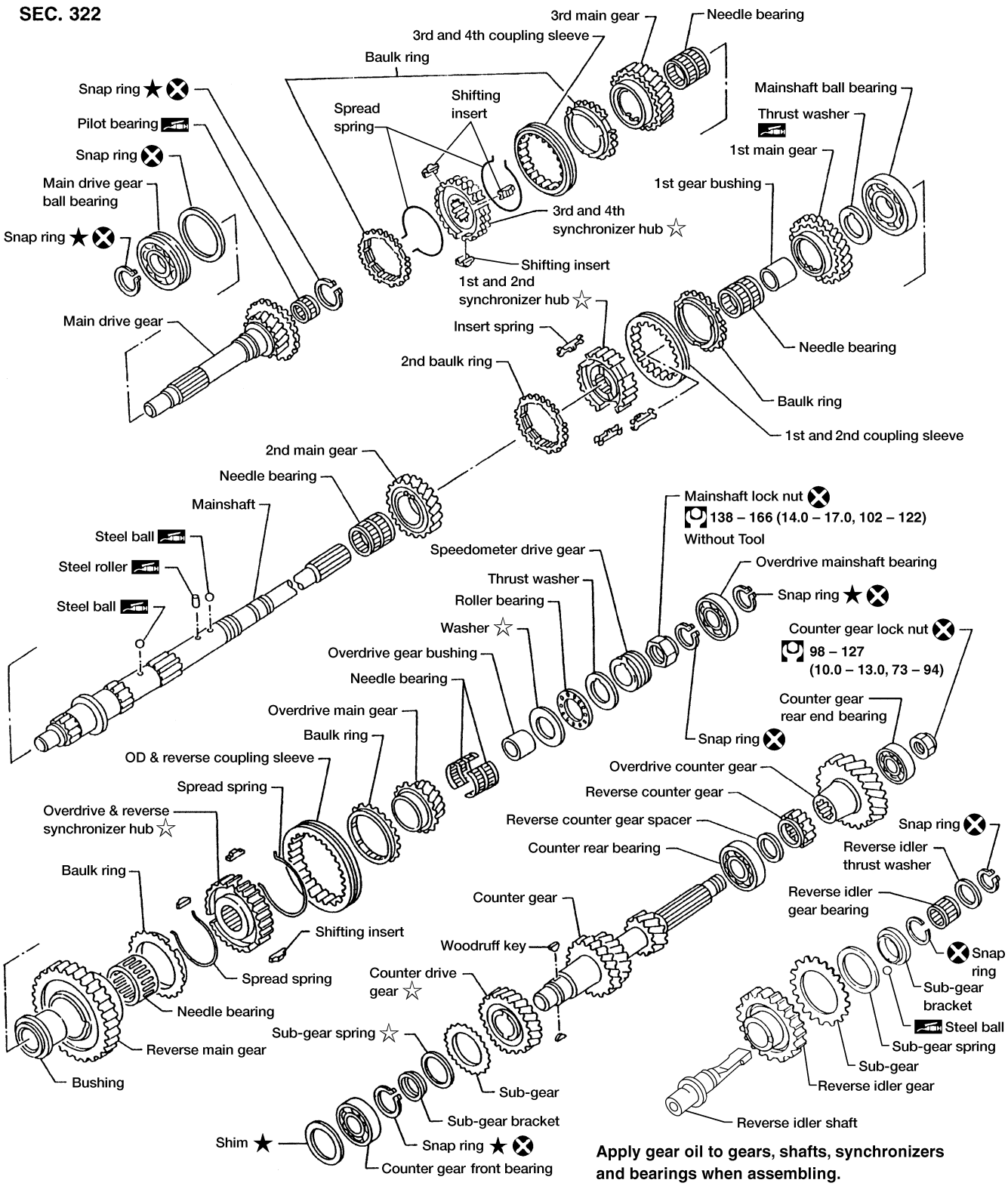

Shift Control Components

NGMT0031S04

CAUTION:
To avoid damage when replacing shift knob, remove shift lever with knob, as assembled.

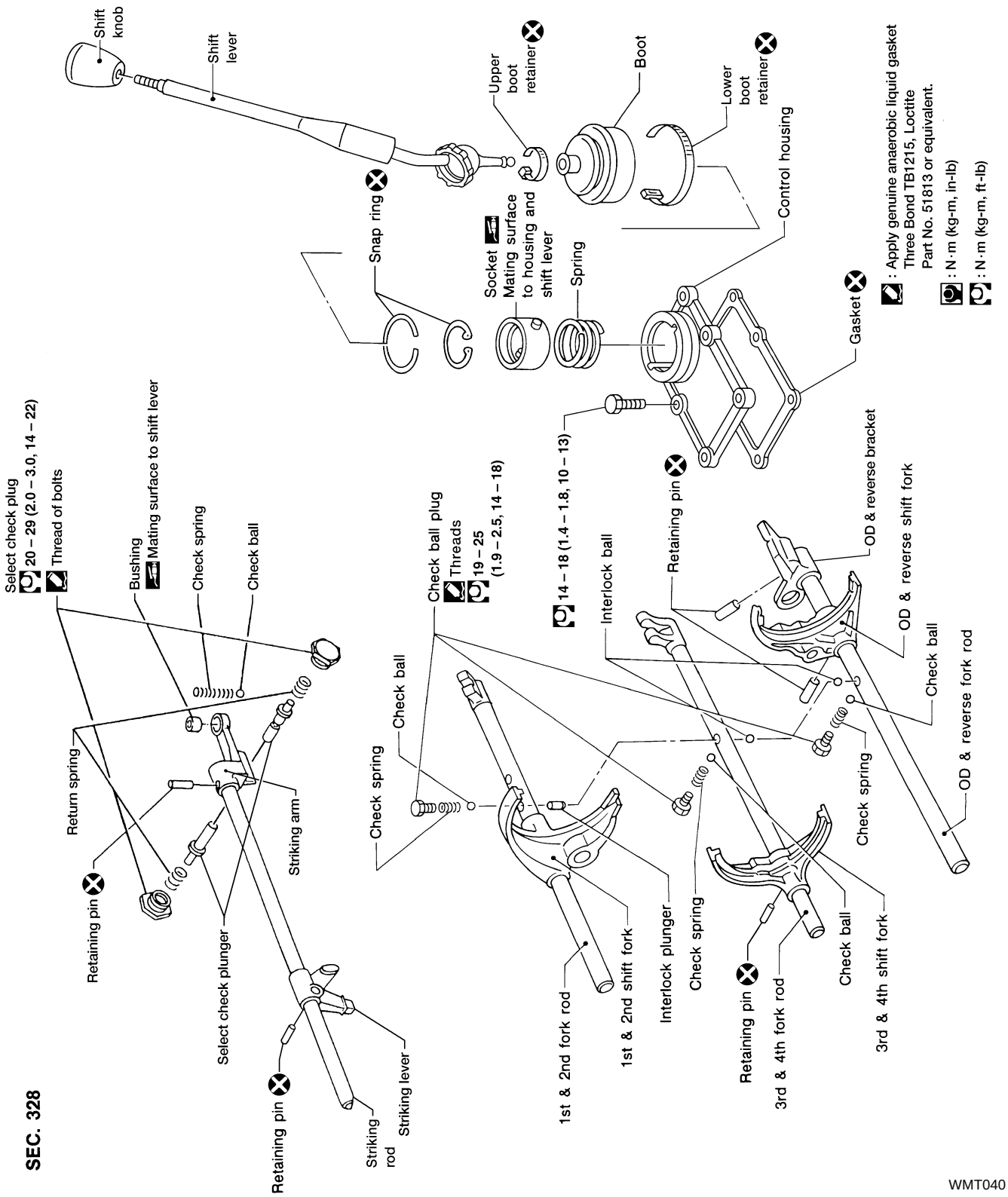

Case Components

DISASSEMBLY

NGMT0032

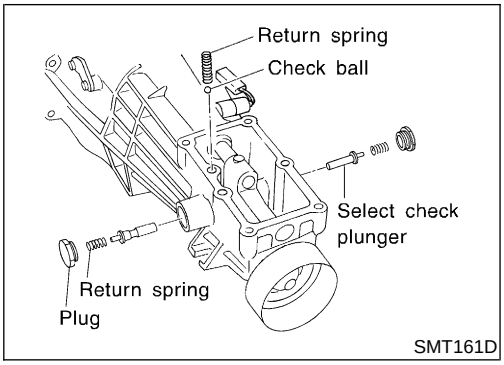

1. Remove rear extension.

a. Remove control housing, check ball, return spring plugs, select check plungers and return springs. Also remove reverse check plug, check spring and check ball.

- **Be careful not to lose check balls.**

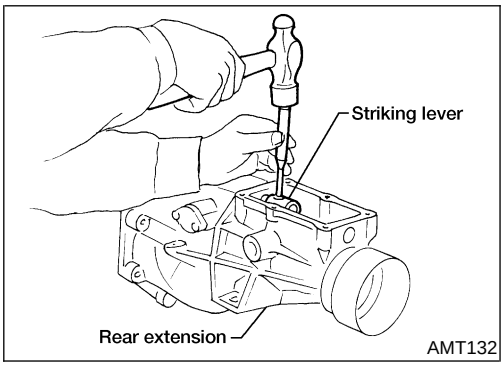

b. Drive out striking lever retaining pin.

c. Remove striking lever from striking rod.

d. Remove rear extension by lightly tapping on it.

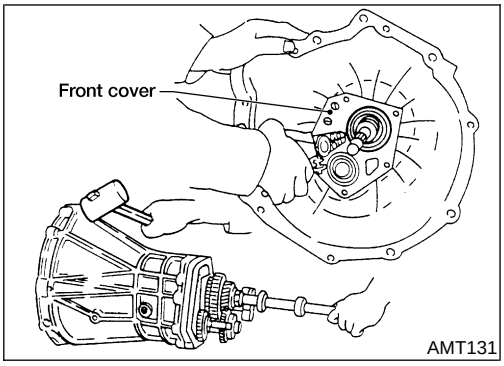

2. Remove front cover, gasket, counter gear front bearing shim and main drive gear ball bearing snap ring.
3. Separate transmission case from adapter plate by lightly tapping on it.

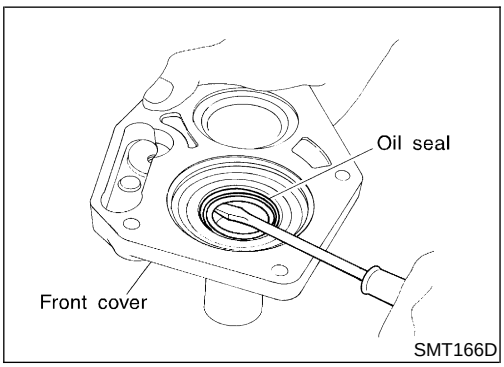

4. Remove oil seal from front cover.

- **Be careful not to damage mating surface of front cover.**

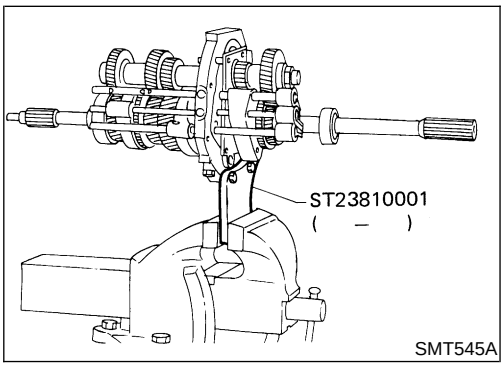

Shift Control Components

DISASSEMBLY

NGMT0033

1. Set up Tool on adapter plate.
2. Remove striking rod from adapter plate.
3. Remove check ball plugs, check springs, and check balls.

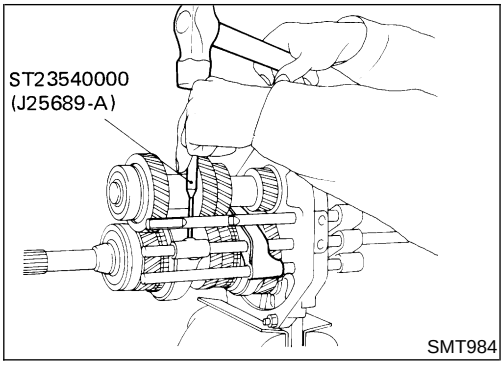

SMT984

4. Drive out retaining pins. Then drive out fork rods and remove interlock balls.

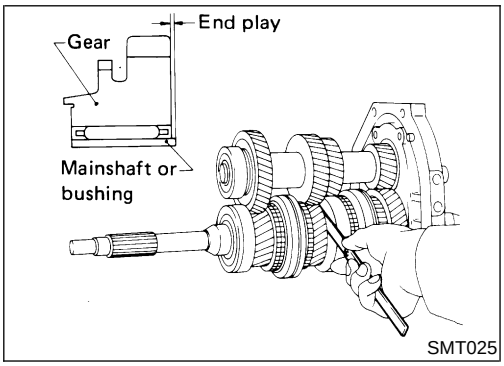

SMT025

Gear Components

DISASSEMBLY

NGMT0034

1. Before disassembly, measure the end play of each gear.
- If end play is not within the specified limit, disassemble and inspect the parts.
- Replace any part which is worn or damaged. Refer to "Gear End Play", MT-30.

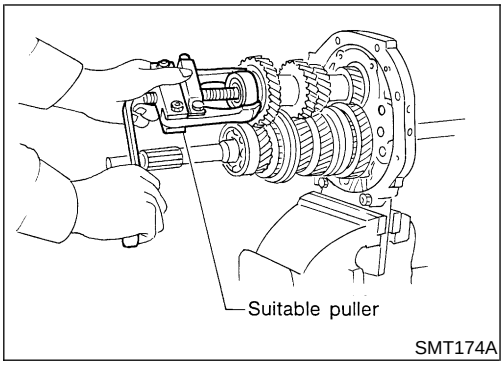

SMT174A

2. Mesh 2nd and reverse gear, then remove counter gear front bearing using a suitable puller.
3. Remove snap ring, then remove sub-gear bracket, sub-gear spring and sub-gear.

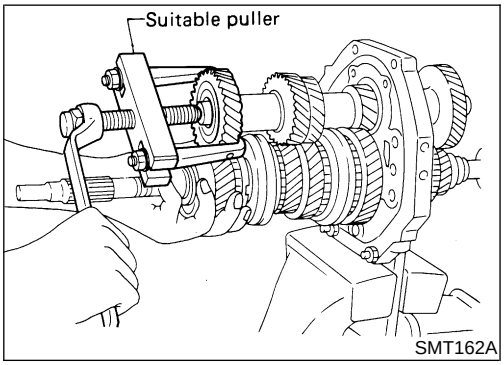

SMT162A

4. Remove counter drive gear together with main drive gear assembly using a suitable puller.
- **When removing main drive gear assembly, be careful not to drop pilot bearing or baulk ring.**
5. Remove snap ring, then remove 3rd and 4th synchronizer assembly and 3rd main gear.

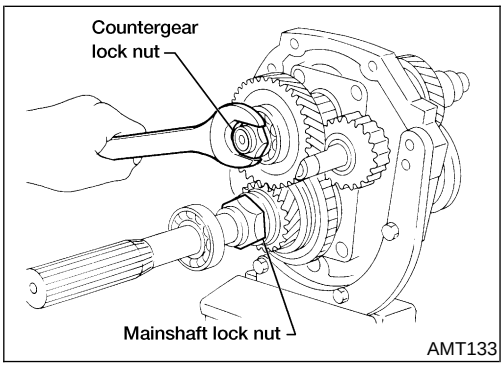

AMT133

6. Disassemble parts at rear of adapter plate as follows:

a. Release staking on both counter gear and mainshaft lock nuts, then loosen both nuts.

Mainshaft lock nut: Left-hand thread

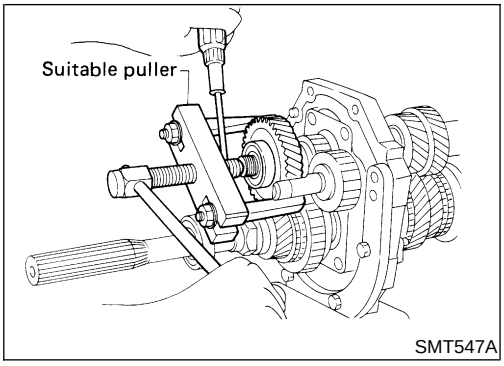

b. Remove overdrive counter gear together with counter gear rear end bearing using a suitable puller.
c. Remove reverse counter gear and spacer.
d. Remove snap rings from reverse idler shaft, then remove reverse idler gear, thrust washers and reverse idler gear bearing.
e. Remove snap ring and pull out overdrive mainshaft bearing, then remove snap ring.
f. Remove mainshaft lock nut.
g. Remove speedometer drive gear and steel ball.
h. Remove thrust washer, steel roller, roller bearing and washer.
i. Remove overdrive main gear, needle bearing and baulk ring (overdrive).
j. Remove counter gear by tapping on rear end of counter gear.
k. Press out overdrive gear bushing and overdrive & reverse synchronizer assembly.
l. Remove reverse main gear and needle bearing.

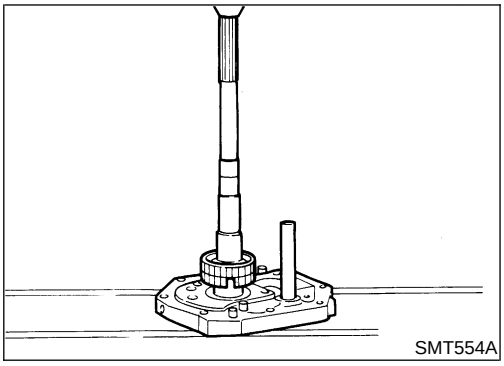

m. Press out reverse gear bushing.

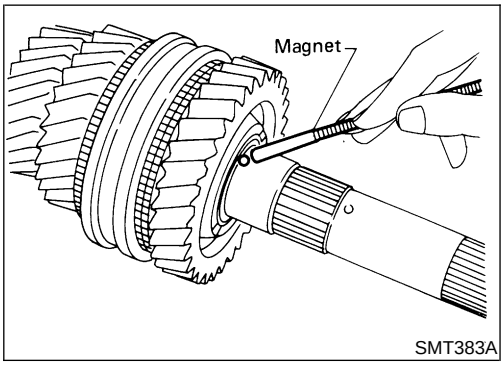

7. Remove thrust washer, steel ball, 1st main gear and needle bearing.

- **Be careful not to lose steel ball.**

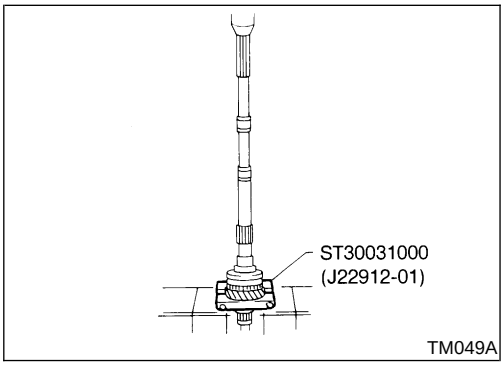

8. Press out 1st gear bushing together with 2nd main gear using Tool.
   Remove 2nd gear needle bearing.

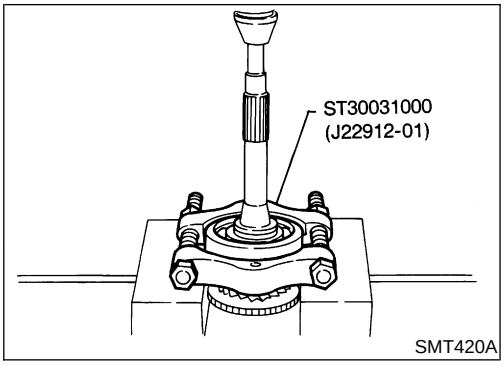

9. Remove main drive gear ball bearing.
a. Remove snap ring.
b. Remove main drive gear ball bearing.

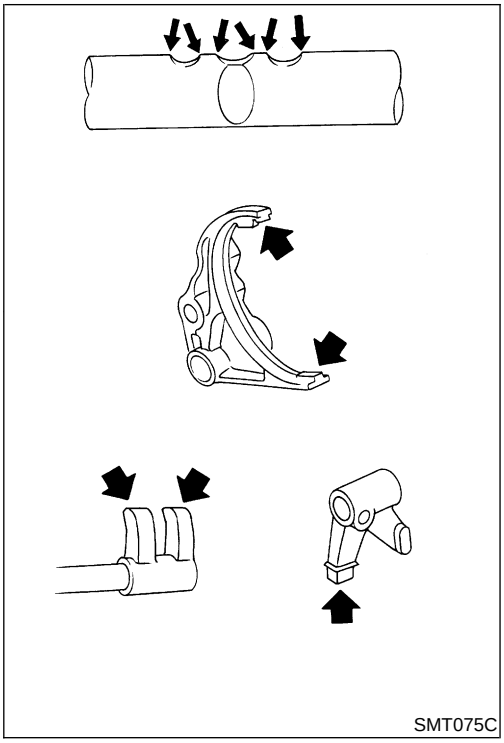
SMT075C

Shift Control Components

INSPECTION

NGMT0035

- Check contact and sliding surfaces of fork rods for wear, scratches, projections and other damage.

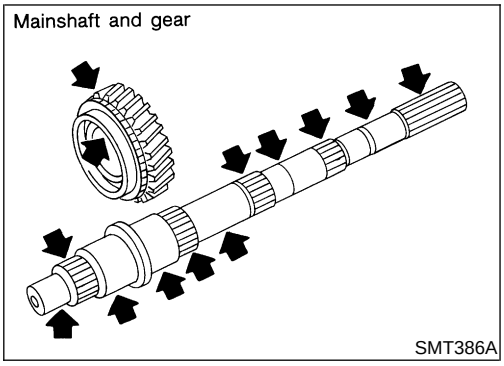

SMT386A

Gear Components

INSPECTION

NGMT0036

Gears and Shafts

NGMT0036S01

- Check shafts for cracks, wear and bending.
- Check gears for excessive wear, chips and cracks.

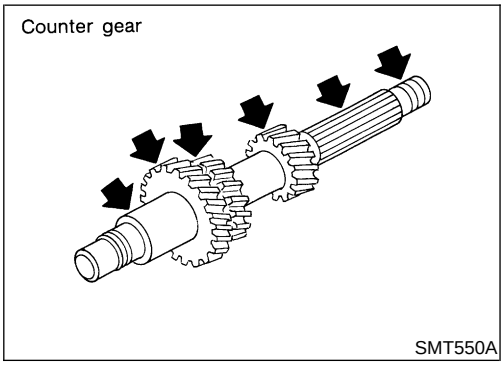

SMT550A

Synchronizers

NGMT0036S02

- Check spline portion of coupling sleeves, synchronizer hubs, and gears for wear, chips, and cracks.
- Check baulk rings for cracks and deformation.
- Check shifting inserts for wear and deformation.
- Check insert spread springs for deformation.

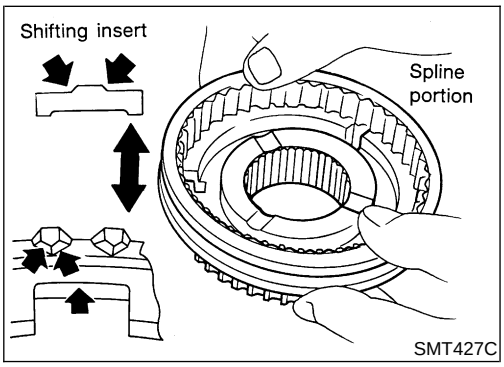

SMT427C

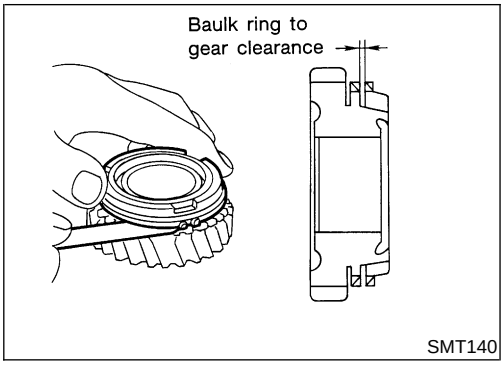

- Measure baulk ring wear.

1) Measure clearance between baulk ring and gear. Refer to "Clearance Between Baulk Ring and Gear", MT-31.

- If the clearance is less than the wear limit, replace baulk ring.

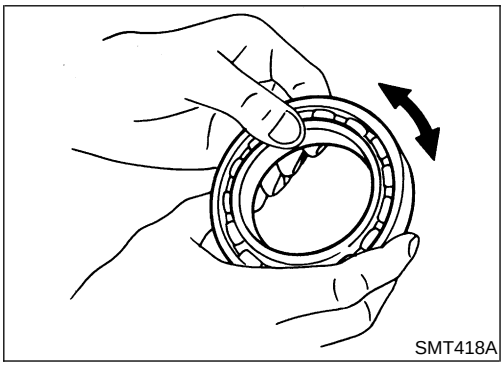

Bearings

NGMT0036S03

- Make sure all bearings roll freely and are free from noise, cracks, pitting or wear.

Gear Components
ASSEMBLY

NGMT0037

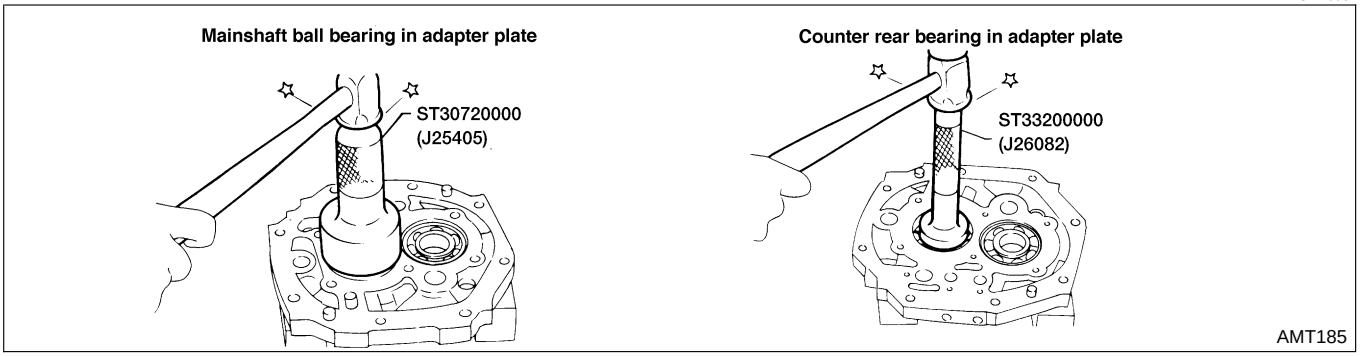

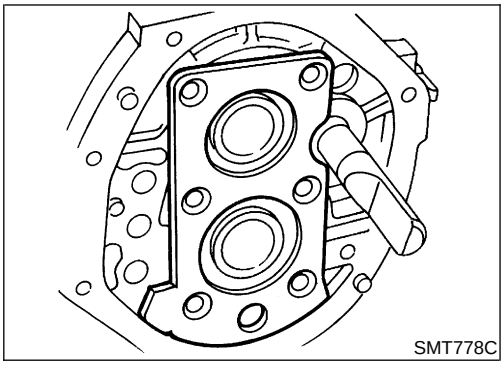

1. Install bearings into case components.
2. Assemble adapter plate parts.

- Install oil gutter on adapter plate and expand on rear side.
- Install bearing retainer.

a. Insert reverse idler shaft, then install bearing retainer.

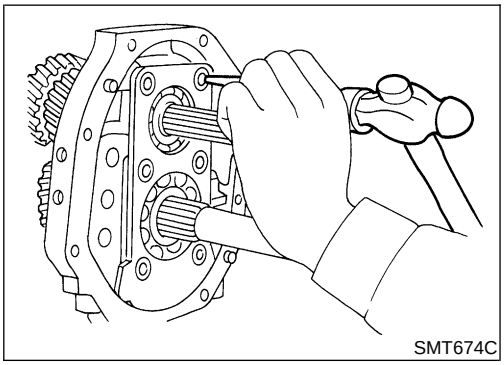

b. Tighten each screw, then stake each one at two points.

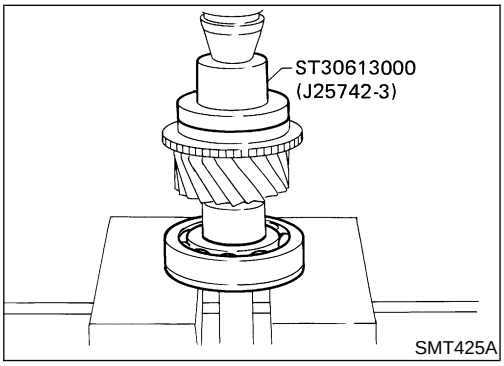

3. Install main drive gear ball bearing.

a. Press main drive gear ball bearing.

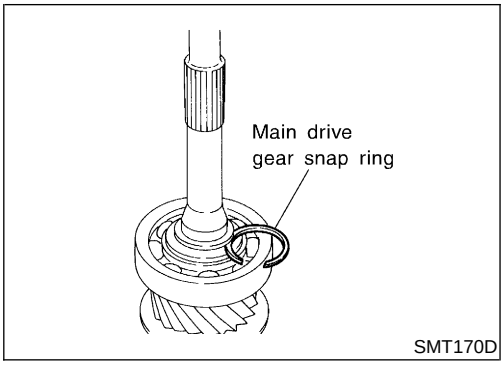

b. Select and install proper main drive gear snap ring to achieve proper clearance of groove. Refer to "MAIN DRIVE GEAR BEARING", MT-31.

Allowable clearance of groove:
0 - 0.13 mm (0 - 0.0051 in)

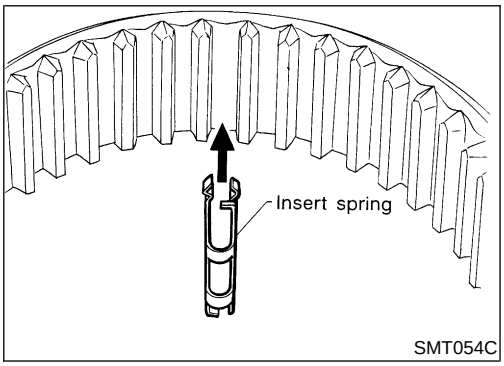

4. Assemble synchronizers.

- Assemble the 1st and 2nd synchronizer.

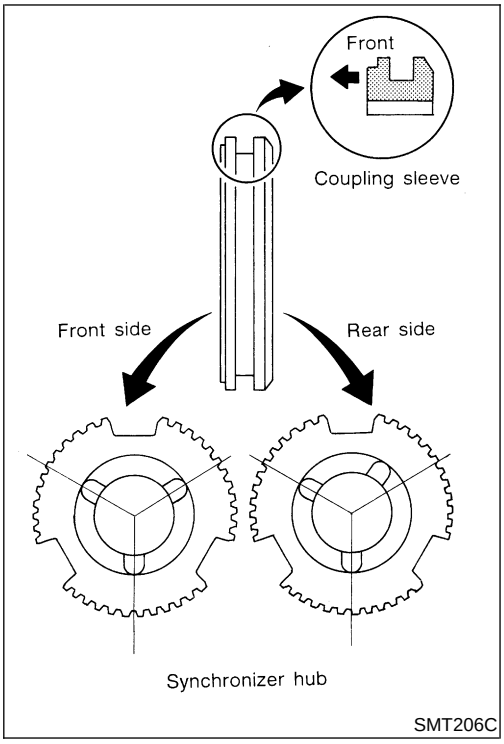

- Check coupling sleeve and synchronizer hub orientation.

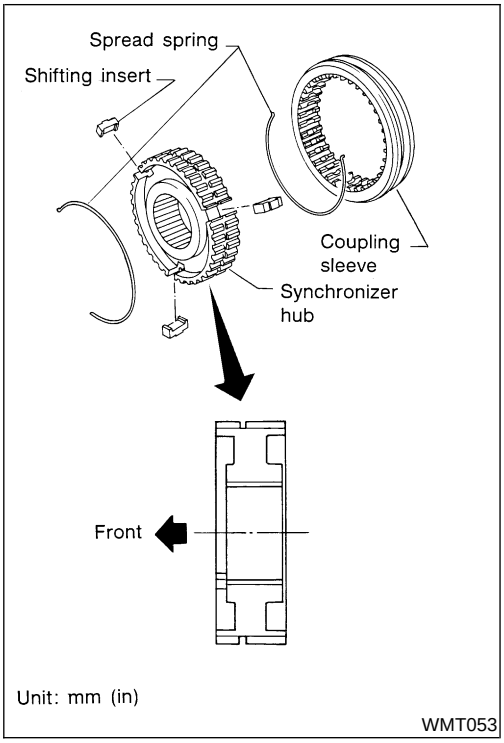

- Assemble the 3rd and 4th synchronizer.

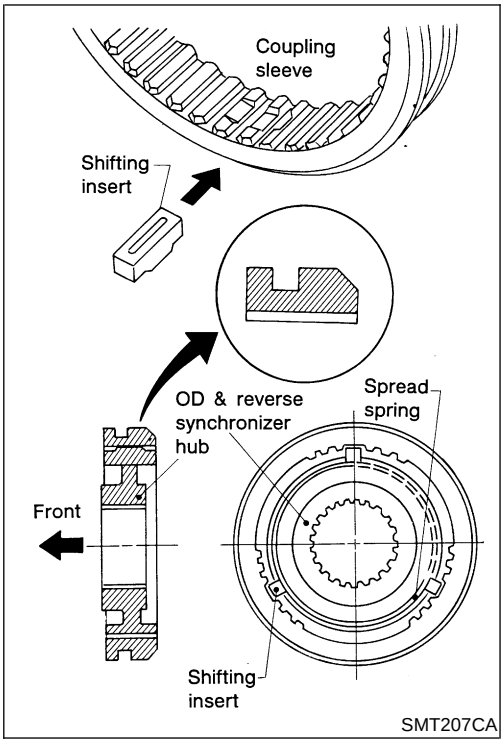

- Assemble the overdrive and reverse synchronizer.

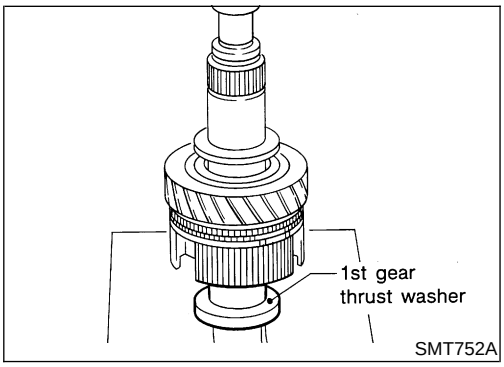

5. Assemble the front side components onto the mainshaft.
a. Install 2nd main gear, needle bearing and 1st and 2nd synchronizer assembly, then press 1st gear bushing on mainshaft.
b. Install 1st main gear.

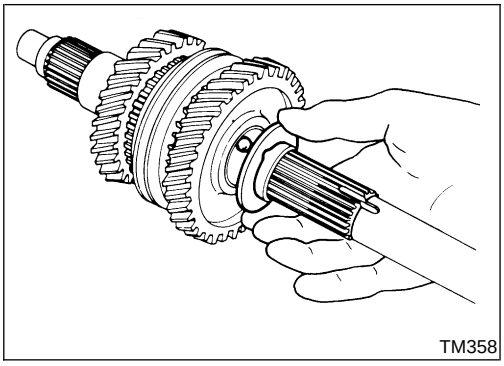
TM358

c. Install steel ball and 1st gear washer.

- **Before installation, apply multi-purpose grease to steel ball and to both sides of the 1st gear washer.**

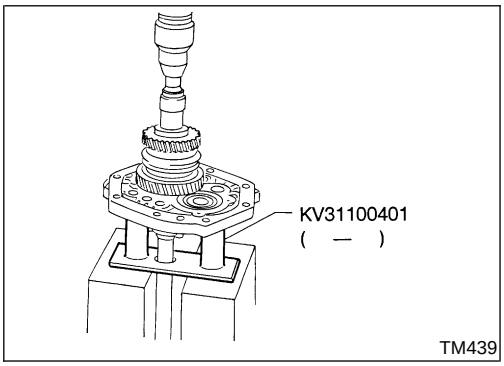

TM439

6. Install mainshaft and counter gear on adapter plate and main drive gear on mainshaft as follows:

a. Press mainshaft assembly into adapter plate using Tool.

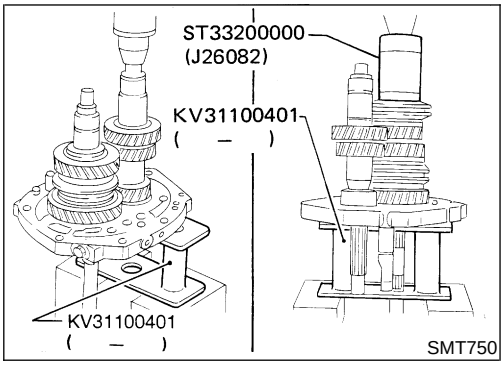

SMT750

b. Press counter gear into adapter plate using Tool.

c. Install 3rd main gear and needle bearing, then press 3rd and 4th synchronizer assembly onto mainshaft.

- **Pay attention to the direction of 3rd and 4th synchronizer.**

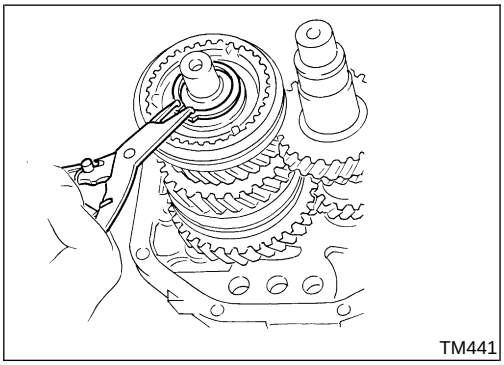
TM441

d. Install front mainshaft snap ring.
Select proper front mainshaft snap ring to achieve proper clearance of groove. Refer to "MAINSHAFT FRONT", MT-31.

Allowable clearance of groove:
0 - 0.13 mm (0 - 0.0051 in)

e. Apply gear oil to mainshaft pilot bearing and install it on mainshaft.

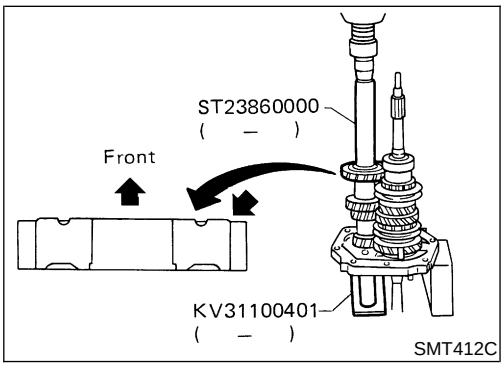

SMT412C

f. Press counter drive gear together with main drive gear using Tool.

- **Pay attention to the direction of counter drive gear.**

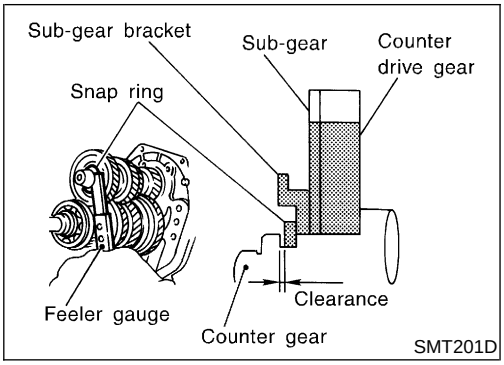

g. Install sub-gear components.

i. Install sub-gear and sub-gear bracket on counter drive gear and then select proper snap ring that will minimize clearance of groove in counter gear. Refer to "COUNTER DRIVE GEAR", MT-31.

- **Do not install sub-gear spring at this time.**

  Allowable clearance of groove:

  0 - 0.18 mm (0 - 0.0071 in)

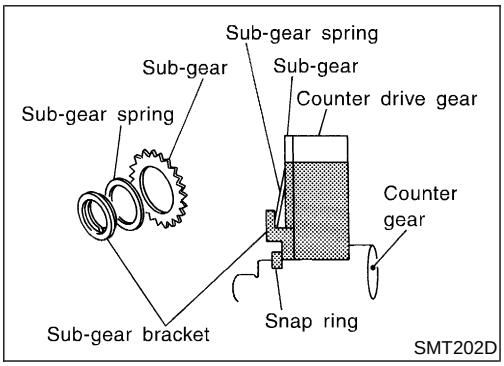

ii. Remove snap ring, sub-gear bracket and sub-gear from counter gear.

iii. Reinstall sub-gear, sub-gear spring, sub-gear bracket and snap ring.

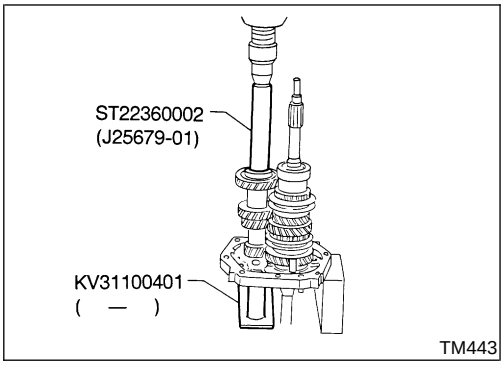

h. Press counter/gear front bearing onto counter gear using Tool.

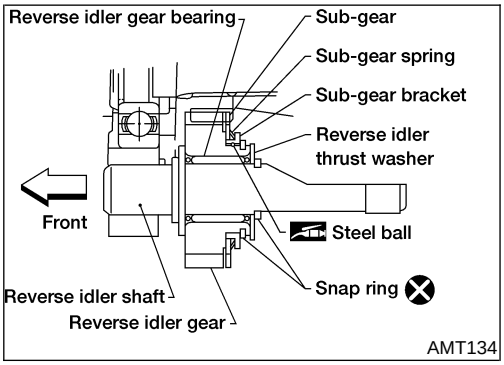

7. Install rear side components on mainshaft and counter gear as follows:

a. Install sub-gear parts (sub-gear, sub-gear spring, sub-gear bracket, steel ball and snap ring) on the reverse idler gear.

b. Install reverse idler gear to reverse idler shaft along with reverse idler thrust washer, snap rings and reverse idler gear bearing.

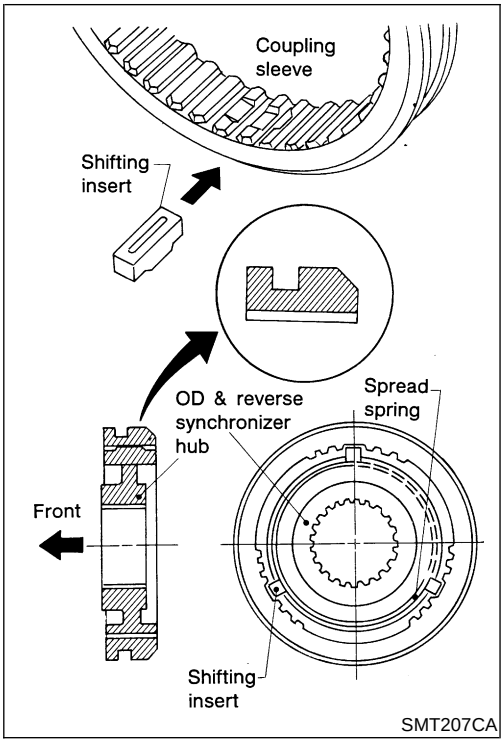

c. Install bushing, reverse main gear and overdrive and reverse synchronizer to mainshaft.

- **Pay attention to the direction of synchronizer hub.**

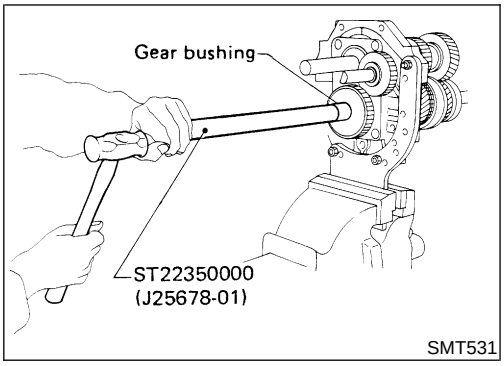

d. Install overdrive gear bushing to mainshaft using Tool.
e. Install overdrive main gear and needle bearing to mainshaft.
f. Install spacer, reverse counter gear and overdrive counter gear to counter/gear.

- **OD main gear and OD counter gear should be handled as a matched set.**

g. Install washer, roller bearing, steel roller and thrust washer.
h. Tighten mainshaft lock nut temporarily.

- **Always use new lock nut.**

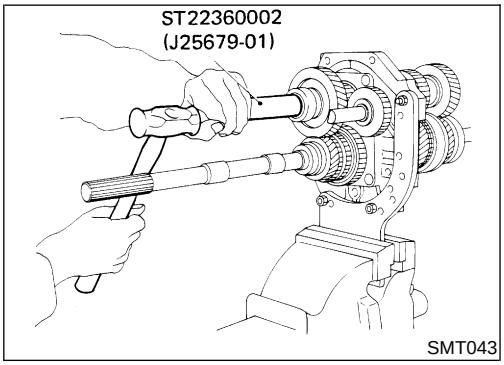

i. Install counter/gear rear end bearing using Tool.

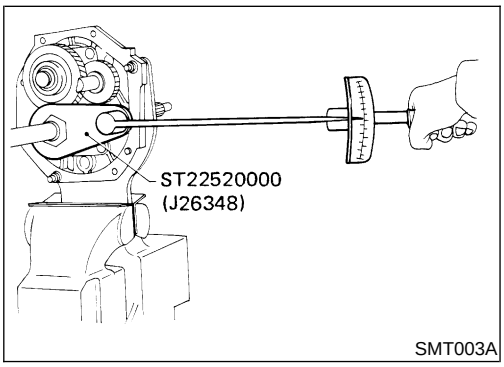

8. Mesh 2nd and reverse gears, then tighten mainshaft lock nut using Tool.

- **Always use new lock nut.**

Mainshaft lock nut:

: 137 - 167 N·m (14.0 - 17.0 kg-m, 101 - 123 ft-lb)

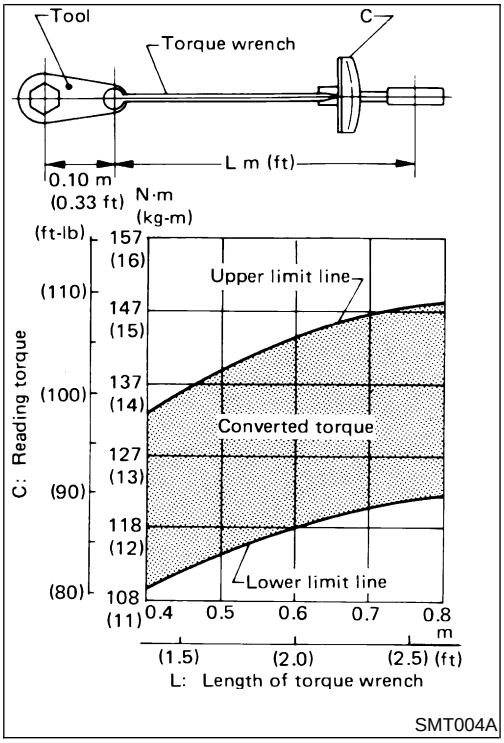

- Use the chart shown at left to determine the proper reading torque.
  (Length of torque wrench vs. setting or reading torque)
  Reference: Formula to convert torque wrench indication to the true torque value:
  $T = (0.1\ m\ (0.33\ ft) + L) / L \times C$
  If the specified torque is T kg-m (ft-lb), the torque wrench scale indication C is determined using the following formula.
  $C = (T \times L) / (0.1\ m\ (0.33\ ft) + L)$

9. Tighten counter gear lock nut.

- **Always use new lock nut.**

  Counter gear lock nut:

  : 98 - 127 N·m (10.0 - 13.0 kg-m, 72 - 94 ft-lb)

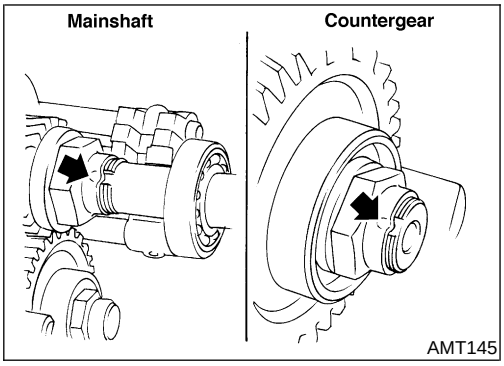

10. Stake mainshaft lock nut and counter gear lock nut using a punch.
11. Measure gear end play. Refer to "DISASSEMBLY", MT-15.
12. Install snap ring and OD mainshaft bearing, then snap ring. Refer to "OD MAINSHAFT BEARING", MT-32.

    Allowable clearance:

    0 - 0.14 mm (0 - 0.0055 in)

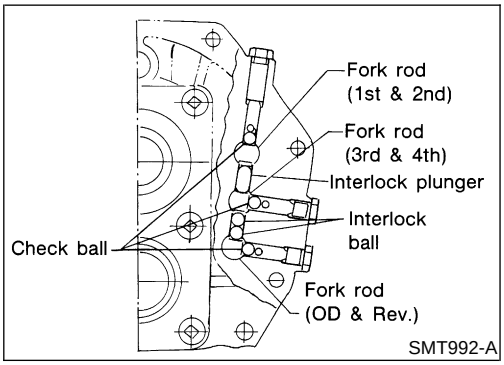

Shift Control Components

ASSEMBLY

NGMT0038

1. Install fork rods, interlock plunger, interlock balls and check balls.

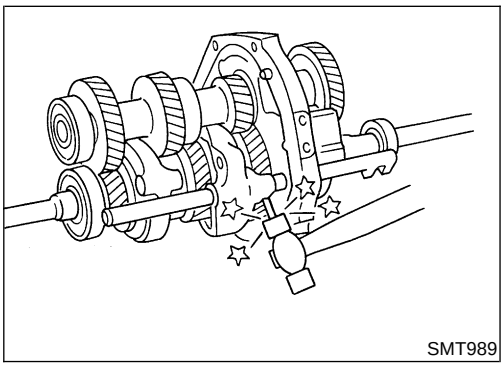

2. Install 1st and 2nd shift fork, then drive in retaining pin.

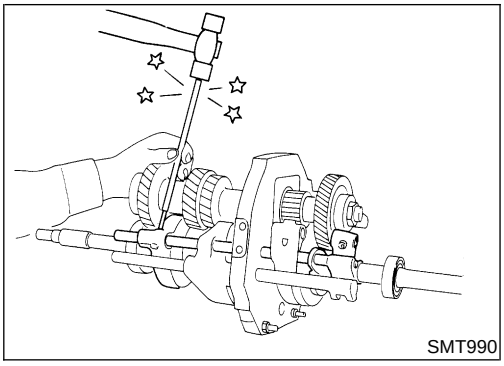
SMT990

3. Install 3rd and 4th shift fork, then drive in retaining pin.

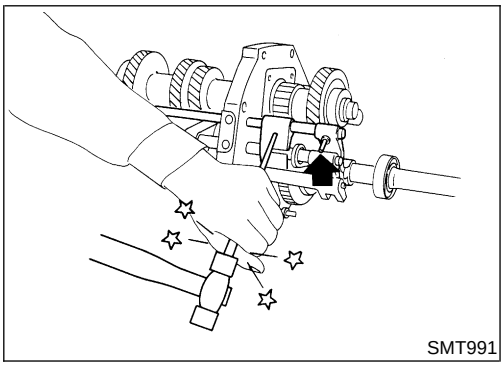
SMT991

4. Install overdrive and reverse shift fork, then drive in retaining pin.

Case Components

ASSEMBLY

NGMT0039

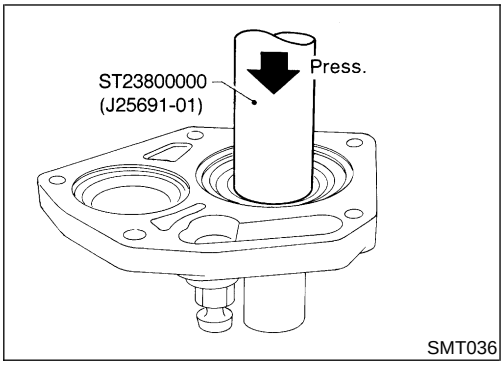

SMT036

1. Install front cover oil seal using Tool.
- **Apply multi-purpose grease to seal lip.**

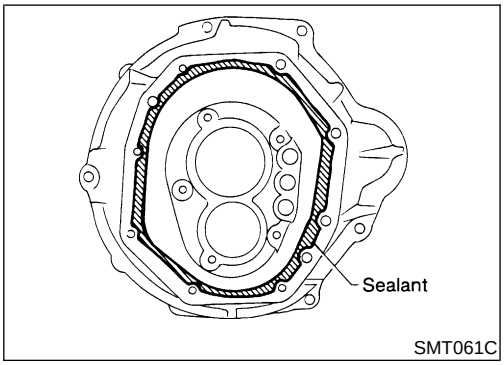

SMT061C

2. Apply sealant to mating surface of transmission case as shown in the figure at left.
- **Use Genuine Anaerobic Liquid Gasket, or equivalent.**

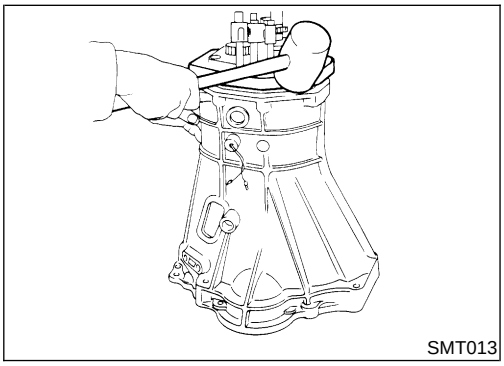
SMT013

3. Slide gear assembly onto adapter plate by lightly tapping it using a soft hammer.

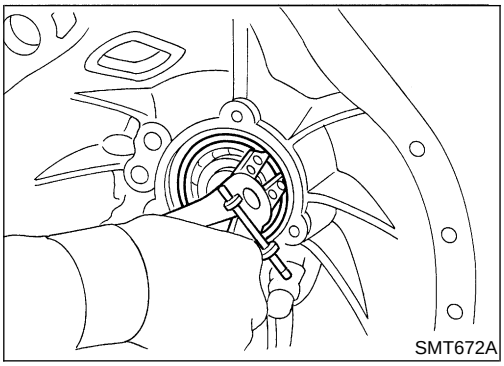
SMT672A

4. Install main drive gear ball bearing snap ring.

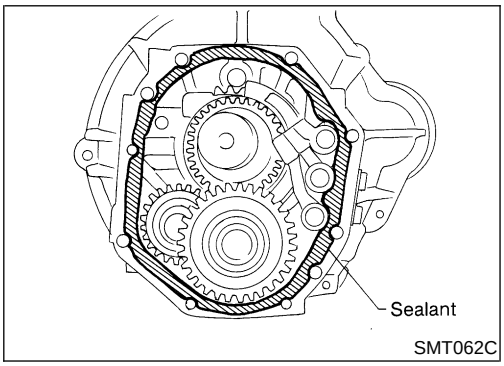

SMT062C

5. Apply sealant to mating surface of adapter plate as shown at left.
- **Use Genuine Anaerobic Liquid Gasket, or equivalent.**

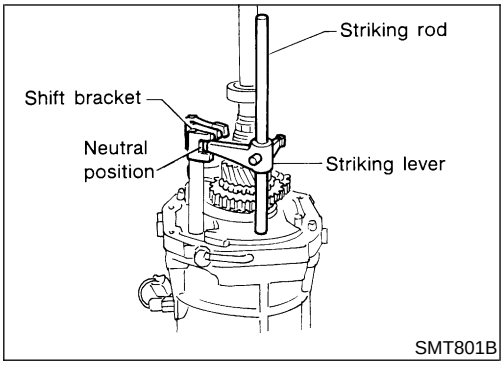

SMT801B

6. Place shift forks in neutral position.
7. Install striking lever and rod onto adapter plate and align striking lever with shift brackets.

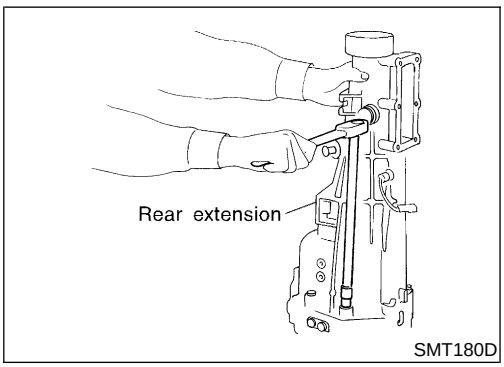

SMT180D

8. Install rear extension.
- Tighten mounting bolts equally in a criss-cross pattern.

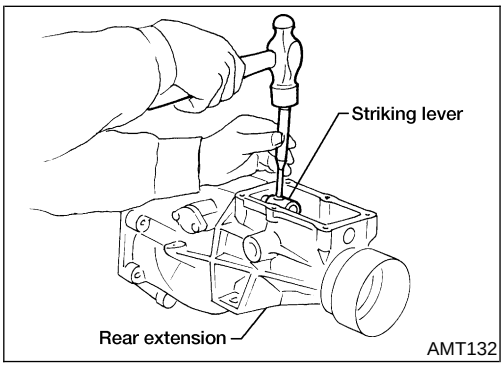

AMT132

9. Install striking lever retaining pin.

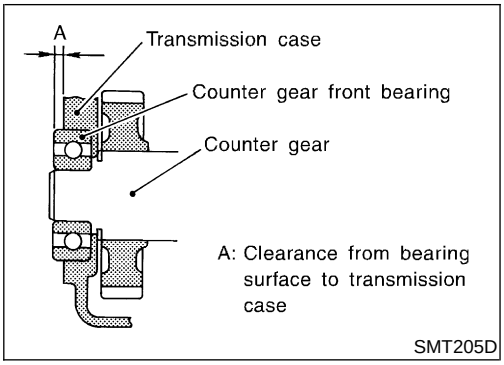

10. Select counter gear front bearing shim. Refer to "COUNTER-SHAFT FRONT BEARING", MT-32.

    Allowable clearance (A) from bearing surface to transmission case:

    0 - 0.16 mm (0 - 0.0063 in)

11. Install gasket and front cover.

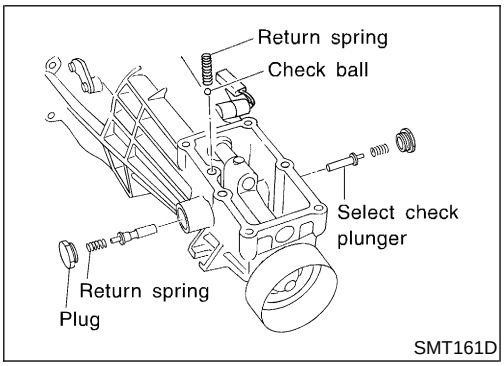

12. Install check ball, return springs, select check plungers and plugs.
13. Install control housing and gasket.

General Specifications

NGMT0040

Applied model		KA24DE (2WD)
Transmission		FS5W71C
Number of speed		5
Shift pattern		 MT-SDS-2
Synchromesh type		Warner
Gear ratio	1st	3.592
	2nd	2.246
	3rd	1.415
	4th	1.000
	OD	0.821
	Reverse	3.657
Mainshaft (Number of teeth)	Drive	21
	1st	33
	2nd	28
	3rd	26
	OD	21
	Reverse	36
Countershaft gear (Number of teeth)	Drive	32
	1st	14
	2nd	19
	3rd	28
	OD	39
	Reverse	15
Reverse idler gear (Number of teeth)		21
Oil capacity ℓ (US pt, Imp pt)		2.0 (4-1/4, 3-1/2)
Remarks	Reverse synchronizer	Installed
	Double cone synchronizer	2nd & 3rd
	Sub-gear	Counter drive gear & reverse idler gear

Gear End Play

NGMT0041

Unit: mm (in)

1st gear	0.31 - 0.41 (0.0122 - 0.0161)
2nd gear	0.11 - 0.21 (0.0043 - 0.0083)
3rd gear	0.11 - 0.21 (0.0043 - 0.0083)
Overdrive gear	0.24 - 0.41 (0.0094 - 0.0161)

Clearance Between Baulk Ring and Gear

NGMT0042
Unit: mm (in)

Standard	1st	1.20 - 1.60 (0.0473 - 0.0629)
	Main drive	1.20 - 1.60 (0.0473 - 0.0629)
	Overdrive	1.20 - 1.60 (0.0473 - 0.0629)
	Reverse	1.10 - 1.55 (0.0433 - 0.0610)
Wear limit	1st	0.80 (0.0315)
	main drive	0.80 (0.0315)
	Overdrive	0.80 (0.0315)
	Reverse	0.70 (0.0276)

2ND & 3RD BAULK RING

NGMT0042S03
Unit: mm (in)

Dimension	Standard	Wear limit
A	0.7 - 0.9 (0.028 - 0.035)	0.2 (0.008)
B	0.6 - 1.1 (0.024 - 0.043)	

Available Snap Rings

NGMT0043

MAIN DRIVE GEAR BEARING

NGMT0043S01
Unit: mm (in)

Allowable clearance 0 - 0.13 (0 - 0.0051)

Thickness	Part number*
1.87 (0.0736)	32204-78001
1.94 (0.0764)	32204-78002
2.01 (0.0791)	32204-78003

*Always check with the Parts Department for the latest parts information.

MAINSHAFT FRONT

NGMT0043S02
Unit: mm (in)

Allowable clearance 0 - 0.18 (0 - 0.0071)

Thickness	Part number*
2.4 (0.094)	32263-V5200
2.5 (0.098)	32263-V5201

*Always check with the Parts Department for the latest parts information.

COUNTER DRIVE GEAR

NGMT0043S03
Unit: mm (in)

Allowable clearance 0 - 0.13 (0 - 0.0051)

Thickness	Part number*
1.4 (0.055)	32215-E9000
1.5 (0.059)	32215-E9001
1.6 (0.063)	32215-E9002

*Always check with the Parts Department for the latest parts information.

Available Snap Rings (Cont'd)

OD MAINSHAFT BEARING

NGMT0043S04

Unit: mm (in)

Allowable clearance 0 - 0.14 (0 - 0.0055)

Thickness	Part number*
1.1 (0.043)	32228-20100
1.2 (0.047)	32228-20101
1.3 (0.051)	32228-20102
1.4 (0.055)	32228-20103

*Always check with the Parts Department for the latest parts information.

Available Shims

NGMT0044

COUNTERSHAFT FRONT BEARING

NGMT0044S01

Unit: mm (in)

Allowable clearance "A" 0 - 0.16 (0 - 0.0063)

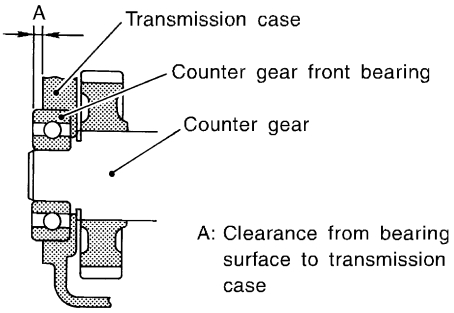

SMT205D

"A"	Thickness of shim	Part number*
4.52 - 4.71 (0.1780 - 0.1854)	Not necessary	
4.42 - 4.51 (0.1741 - 0.1775)	0.1 (0.004)	32218-V5000
4.32 - 4.41 (0.1701 - 0.1736)	0.2 (0.008)	32218-V5001
4.22 - 4.31 (0.1662 - 0.1691)	0.3 (0.012)	32218-V5002
4.12 - 4.21 (0.1622 - 0.1657)	0.4 (0.016)	32218-V5003
4.02 - 4.11 (0.1583 - 0.1618)	0.5 (0.020)	32218-V5004
3.92 - 4.01 (0.1544 - 0.1578)	0.6 (0.024)	32218-V5005

*Always check with the Parts Department for the latest parts information.

Special Service Tools

NGMT0001

The actual shapes of Kent-Moore tools may differ from those of special service tools illustrated here.

Tool number (Kent-Moore No.) Tool name	Description	
ST23540000 (J25689-A) Pin punch	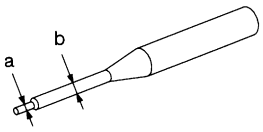 NT442	Removing and installing retaining pin **a: 2.3 mm (0.091 in) dia.** **b: 4 mm (0.16 in) dia.**
ST30031000 (J22912-01) Puller	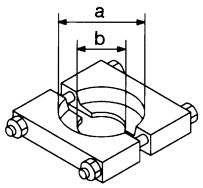 NT411	Removing 1st & 2nd synchronizer assembly Removing counter gear rear thrust bearing Removing main drive bearing **a: 90 mm (3.54 in) dia.** **b: 50 mm (1.97 in) dia.**
ST33290001 (J34286) Puller	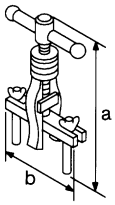 NT414	Removing rear oil seal **a: 250 mm (9.84 in)** **b: 160 mm (6.30 in)**
ST33230000 (—) Drift	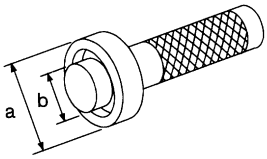 NT084	Removing mainshaft and counter gear **a: 51 mm (2.01 in) dia.** **b: 28.5 mm (1.122 in) dia.**
ST22350000 (J25678-01) Drift	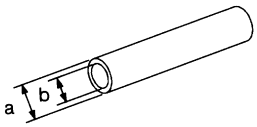 NT065	Removing counter gear front bearing (Use with KV38100300) **a: 34 mm (1.34 in) dia.** **b: 28 mm (1.10 in) dia.**
KV38100300 (J25523) Drift	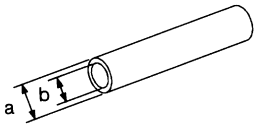 NT065	Removing counter gear front bearing (Use with ST22350000) Installing counter gear rear bearing **a: 54 mm (2.13 in) dia.** **b: 32 mm (1.26 in) dia.**
ST30720000 1 (J34286) 2 (J34331) Drift	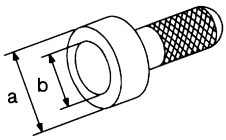 NT115	1 Removing mainshaft front bearing 2 Installing mainshaft front bearing **a: 77 mm (3.03 in) dia.** **b: 55.5 mm (2.185 in) dia.**
ST33210000 1 (J25523) 2 (J25803-01) Drift	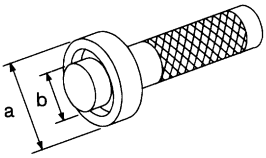 NT084	1 Installing counter gear front bearing 2 Installing front cover oil seal **a: 44 mm (1.73 in) dia.** **b: 24.5 mm (0.965 in) dia.**

Special Service Tools (Cont'd)

Tool number (Kent-Moore No.) Tool name	Description	
ST30613000 (J25742-3) Drift	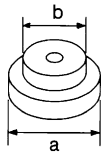 NT073	Installing main drive gear bearing **a: 72 mm (2.83 in) dia.** **b: 48 mm (1.89 in) dia.**
ST37750000 1 (J34286) 2 (J34332) 3 (J34334) 4 (J25679-01) Drift	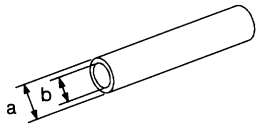 NT065	1 Removing counter gear rear bearing 2 Installing OD gear bushing 2 Removing and installing mainshaft rear bearing (4WD model) 2 Installing reverse cone 3 Installing reverse counter gear 4 Installing counter gear rear end bearing **a: 40 mm (1.57 in) dia.** **b: 31 mm (1.22 in) dia.**
ST22452000 (J34337) Drift	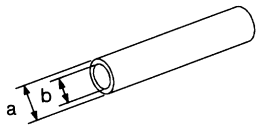 NT065	Installing reverse hub Installing mainshaft rear bearing (2WD model) **a: 45 mm (1.77 in) dia.** **b: 36 mm (1.42 in) dia.**
ST33400001 (J26082) Drift	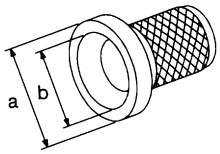 NT086	Installing rear oil seal **a: 60 mm (2.36 in) dia.** **b: 47 mm (1.85 in) dia.**
(J26349-3) Puller leg	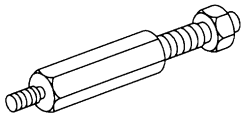 NT078	Installing mainshaft and counter gear (Use with J34328)
(J34328) Puller	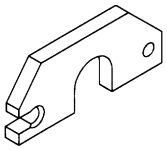 NT079	Installing mainshaft and counter gear (Use with J26349-3)
(J26092) Drift	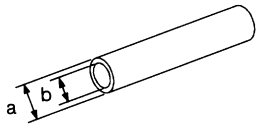 NT065	Installing sub-gear snap ring **a: 44.5 mm (1.752 in) dia.** **b: 38.5 mm (1.516 in) dia.**
(J34342) Drift	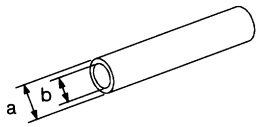 NT065	Installing OD main gear Installing reverse gear bushing **a: 44.5 mm (1.752 in) dia.** **b: 40.5 mm (1.594 in) dia.**

Tool number (Kent-Moore No.) Tool name	Description	
ST33220000 (J25804-01) Drift	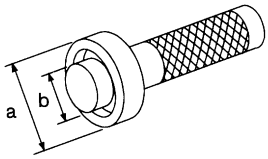 NT084	Installing mainshaft rear bearing **a: 37 mm (1.46 in) dia.** **b: 22 mm (0.87 in) dia.**
(J-26349-A) Bearing Remover and Puller Set	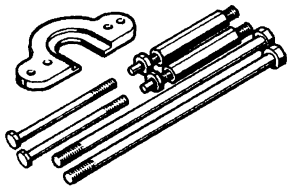 WMT065	Removing and installing mainshaft bearing (Use with J-25726-B)
(J-34286) Rear Race Puller	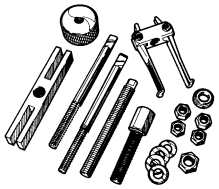 WMT066	Removing races
(J-39856) Gear and Bearing Removal Kit	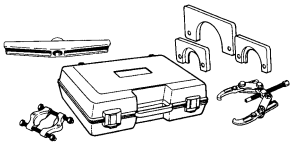 WMT067	Removing gears and bearing

Commercial Service Tool

NGMT0002

Tool name	Description	
Puller	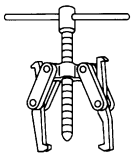 NT077	Removing counter gear rear end bearing Removing mainshaft rear bearing (2WD model) Removing reverse synchronizer hub Removing reverse counter gear

NVH Troubleshooting Chart

NGMT0023S01

Use the chart below to help you find the cause of the problem. The numbers indicate the order of the inspection. If necessary, repair or replace these parts.

MANUAL TRANSMISSION

NGMT0023S0101

Reference page			Refer to ***MA-38***, "Checking M/T Oil".		MT-44	MT-44	MT-47	MT-47	MT-47	MT-45	MT-45	MT-45	MT-45
SUSPECTED PARTS (Possible cause)		OIL (Level low)	OIL (Wrong)	OIL (Level too high)	GASKET (Damaged)	OIL SEAL (Worn or damaged)	O-RING (Worn or damaged)	CHECK PLUG RETURN SPRING AND CHECK BALL (Worn or damaged)	SHIFT FORK (Worn)	GEAR (Worn or damaged)	BEARING (Worn or damaged)	BAULK RING (Worn or damaged)	INSERT SPRING (Damaged)
Symptom	Noise	1	2							3	3		
	Oil leakage		3	1	2	2	2						
	Hard to shift or will not shift		1	1								2	2
	Jumps out of gear							1	2	2			

Cross-sectional View — 2WD Model

NGMT0005S01

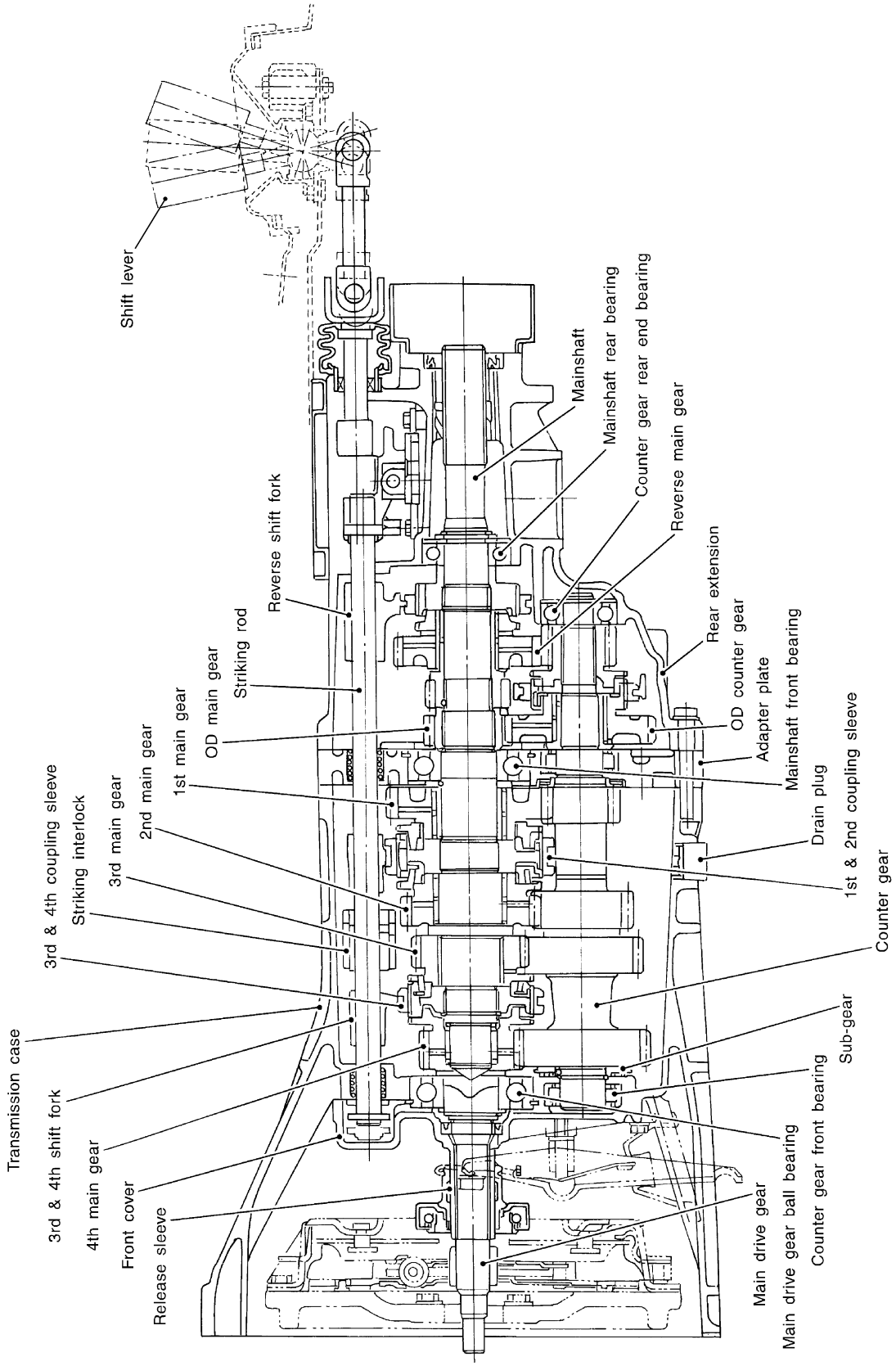

WMT041

Cross-sectional View — 4WD Model

NGMT0005S02

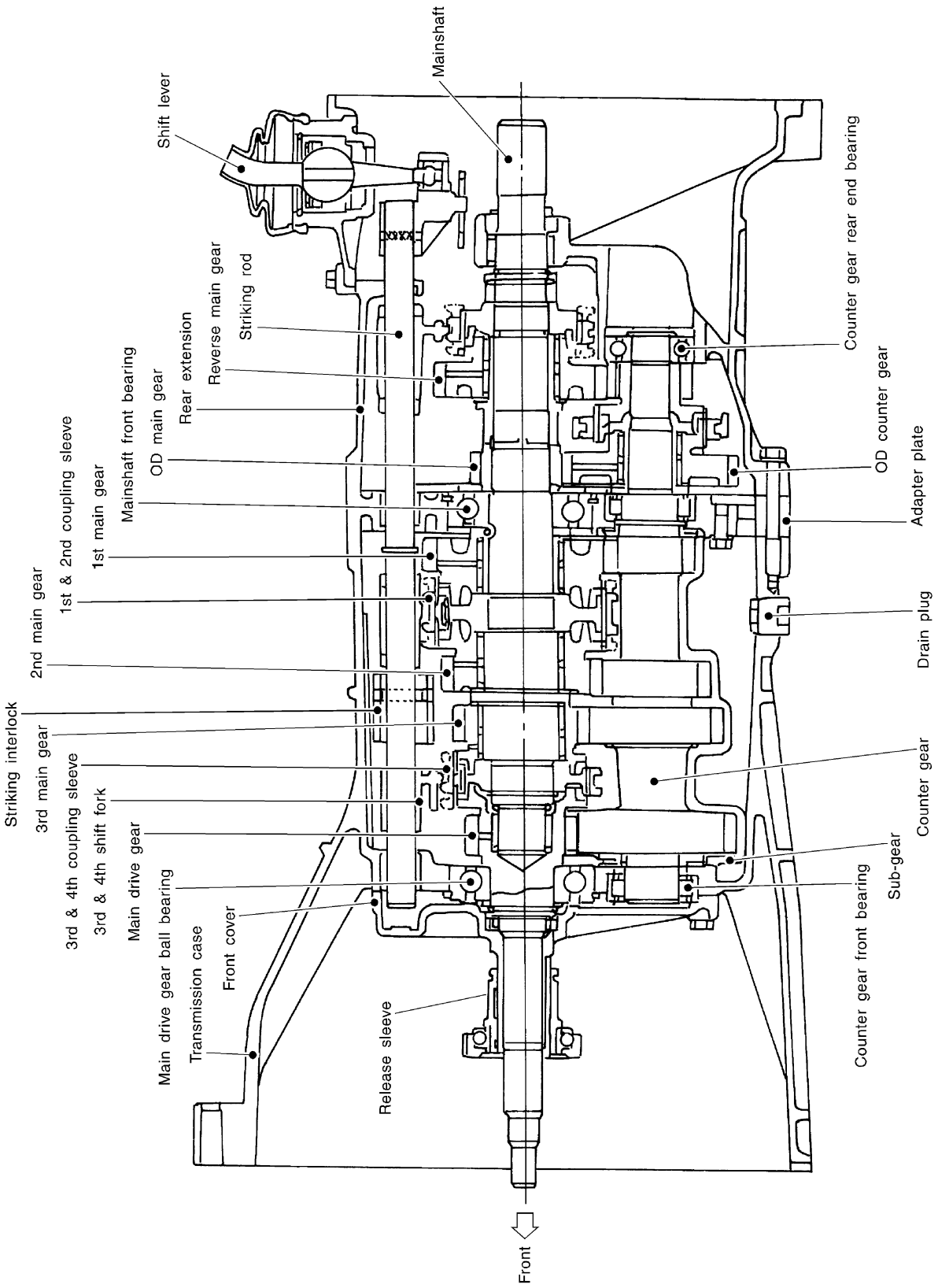

SMT320D

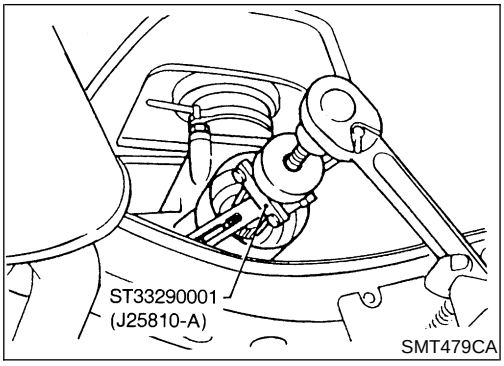

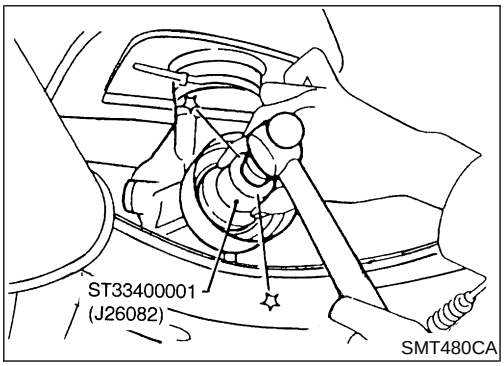

Replacing Rear Oil Seal — 2WD Model

NGMT0003

REMOVAL

NGMT0003S01

1. Remove the propeller shaft. Refer to ***PD-8***, “Removal and Installation”.
2. Remove rear oil seal using Tool.

- **Always replace with a new seal once it has been removed.**

INSTALLATION

NGMT0003S02

1. Install new oil seal until it stops.

- **Apply multi-purpose grease to seal lip of oil seal before installing.**

2. Install any part removed.

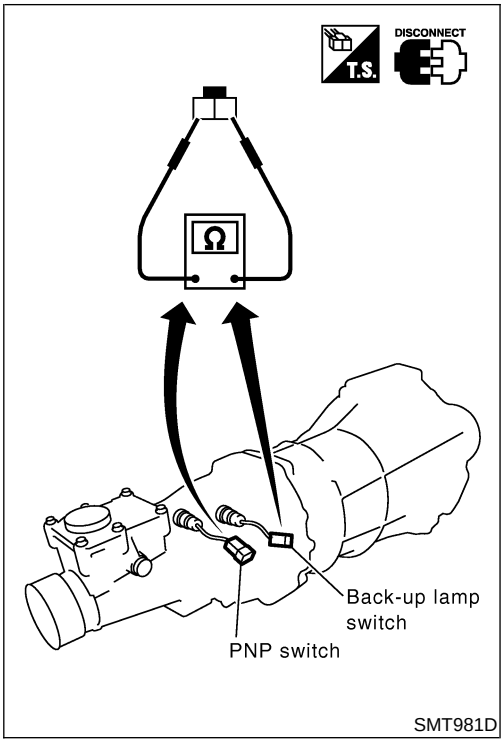

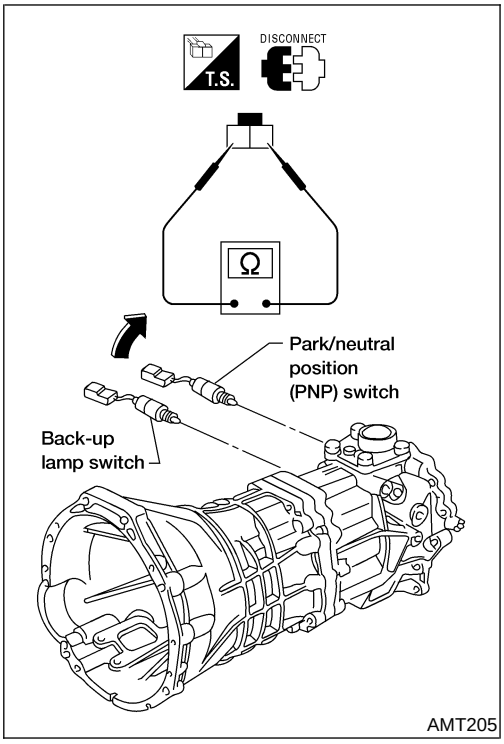

Position Switch Check

NGMT0004

Switch	Gear position	Continuity
Back-up lamp switch	Reverse	Yes
	Except reverse	No
Park/neutral position (PNP) switch	Neutral	Yes
	Except neutral	No

Removal

NGMT0006S01

CAUTION:
When removing the M/T assembly from engine, first remove the crankshaft position sensor (OBD) from the M/T assembly. Be careful not to damage sensor edge.

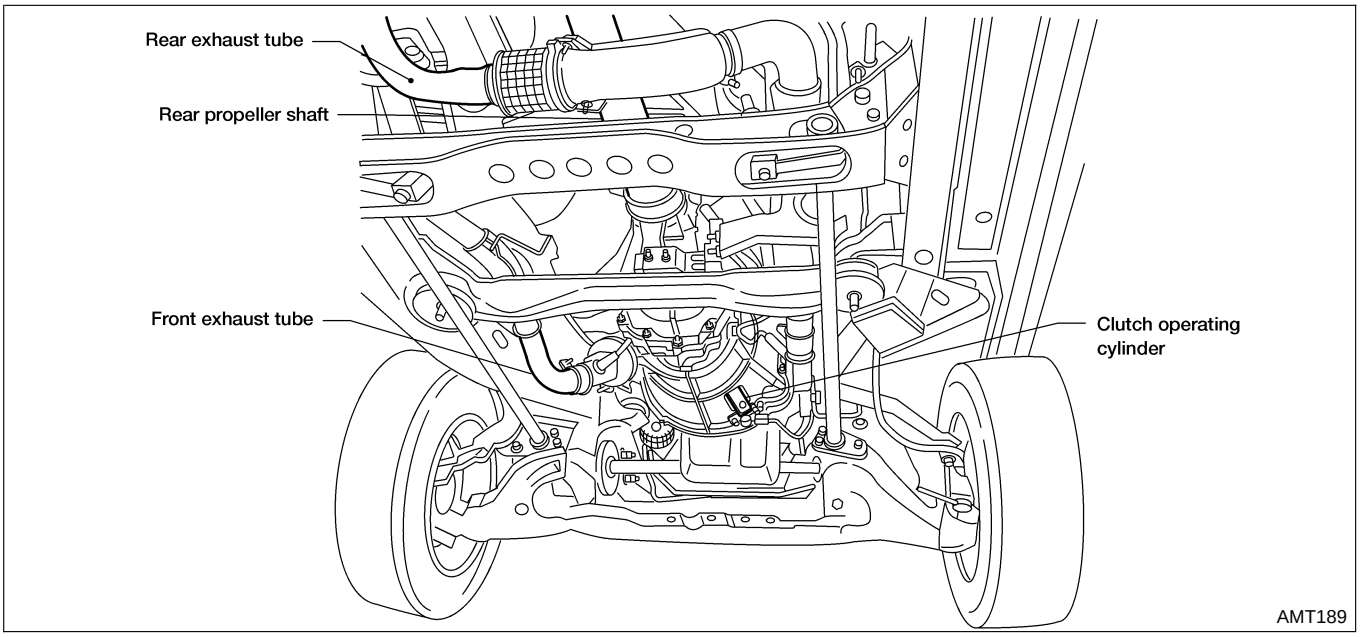

2WD MODEL

NGMT0006S0101

1. Disconnect the battery negative terminal.
2. Remove the shift lever with control housing from the transmission.
3. Remove the crankshaft position sensor (OBD) from the upper side of the transmission case.
4. Remove the clutch operating cylinder from the transmission. Tighten the clutch operating cylinder to the specified torque. Refer to ***CL-5***, “CLUTCH SYSTEM”.
5. Disconnect the vehicle speed sensor, back-up lamp switch, heated oxygen sensor (rear), and the park/neutral position (PNP) switch harness connectors.
6. Remove the starter motor from the transmission.
   : 41 - 52 N·m (4.2 - 5.3 kg-m, 30 - 38 ft-lb)
7. Remove propeller shaft. Refer to ***PD-8***, “Removal”.

- **Insert plug into rear oil seal after removing propeller shaft.**
- **Be careful not to damage spline, sleeve yoke and rear oil seal when removing propeller shaft.**

8. Remove the gussets from the transmission or engine.

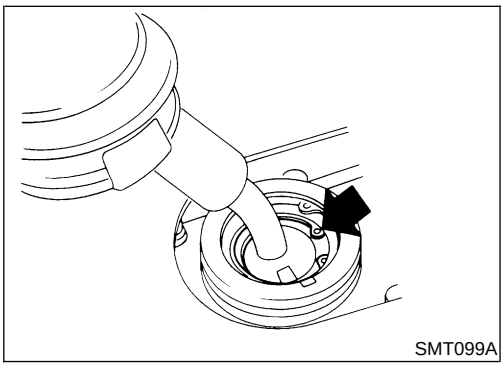

9. Remove exhaust tube mounting bracket from transmission. Refer to ***FE-9***, “EXHAUST SYSTEM”.
10. Support manual transmission with a jack.
11. Remove rear mounting member. Tighten rear mounting member to the specified torque. Refer to ***EM-112***, “ENGINE REMOVAL”.
12. Lower manual transmission as much as possible.

WARNING:
Support manual transmission while removing it.

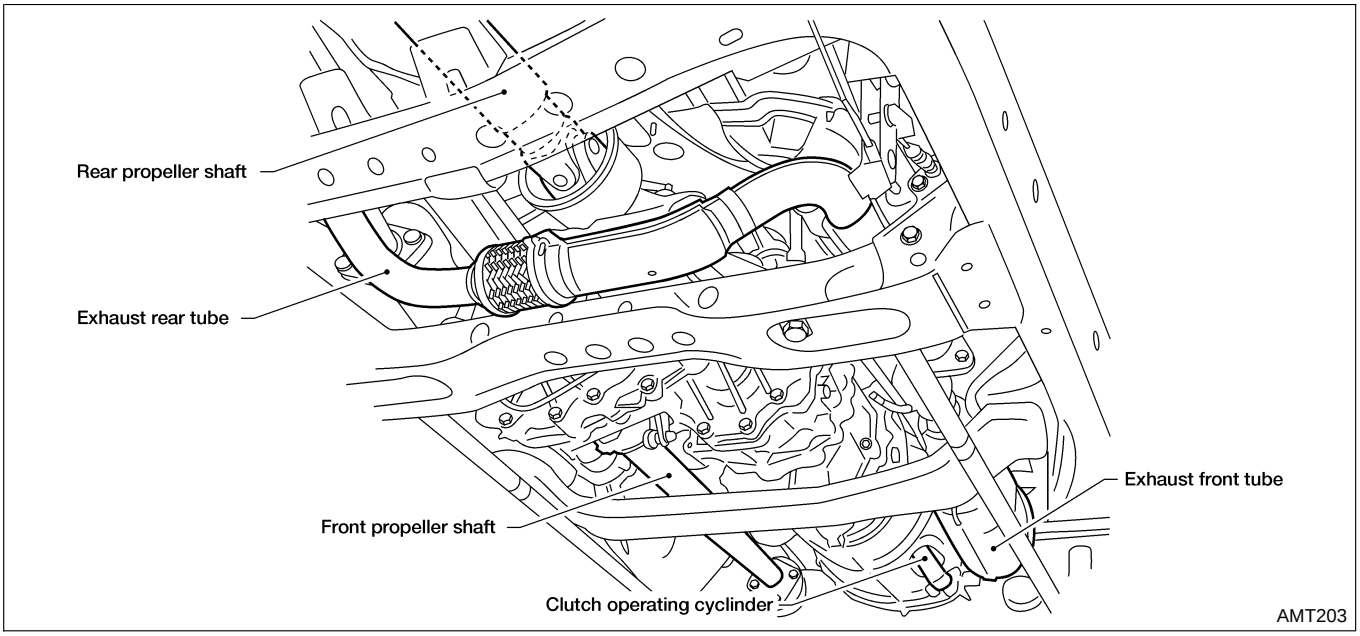

4WD MODEL

NGMT0006S0102

1. Disconnect the battery negative terminal.
2. Remove the shift lever from the transmission and the control lever from the transfer.
3. Remove the clutch operating cylinder from the transmission. Tighten the clutch operating cylinder to the specified torque. Refer to ***CL-5***, "CLUTCH SYSTEM".
4. Disconnect the vehicle speed sensor, back-up lamp switch, heated oxygen sensor (rear), and the park/neutral position (PNP) switch harness connectors.
5. Remove the starter motor from the transmission.

   : 41 - 52 N·m (4.2 - 5.3 kg-m, 30 - 38 ft-lb)
6. Remove the front and rear propeller shafts. Refer to ***PD-8***, "Removal".

- **Insert plug into rear oil seal after removing propeller shaft.**
- **Be careful not to damage spline, sleeve yoke and rear oil seal when removing propeller shaft.**

7. Remove the exhaust tube mounting bracket from the transmission. Refer to ***FE-9***, "EXHAUST SYSTEM".
8. Remove the front exhaust tubes and center pipe.
9. Remove the torsion bars and mounts. Refer to ***SU-12***, "Removal".
10. Remove the rear torsion bar crossmember.
11. Remove the gussets from the transmission or engine.
12. Support the manual transmission with a jack.
13. Remove the rear mounting member. Tighten the rear mounting member to the specified torque. Refer to ***EM-112***, "ENGINE REMOVAL".
14. Lower the manual transmission as much as possible.

WARNING:

Support the manual transmission together with the transfer, while removing it.

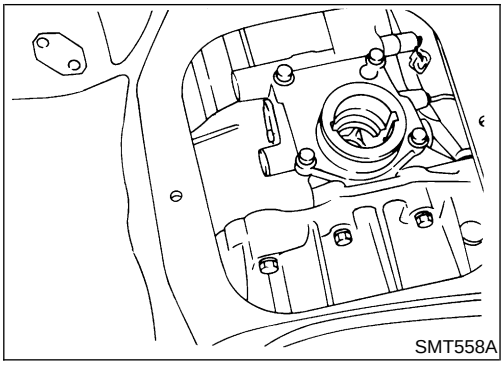
SMT558A

15. Remove the crankshaft position sensor (OBD) from the upper side of the transmission case.
16. Remove the transmission bolts.

WARNING:
Support the manual transmission together with the transfer, while removing it.

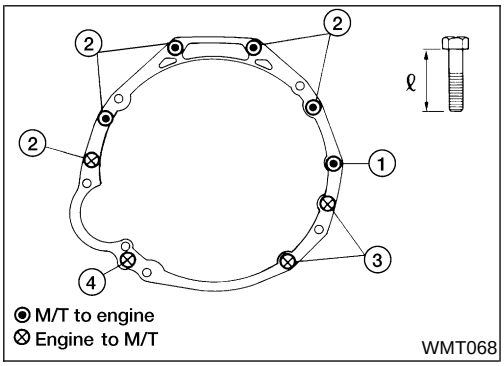

WMT068

Installation

NGMT0006S02

- Tighten bolt securing transmission.

Bolt No.	Tightening torque N·m (kg-m, ft-lb)	ℓ mm (in)
1	39 - 49 (4.0 - 5.0, 29 - 36)	65 (2.56)
2	39 - 49 (4.0 - 5.0, 29 - 36)	58 (2.28)
3	29 - 39 (3.0 - 4.0, 22 - 29)	20 (0.79)
4 (Starter spacer and cover plate)	29 - 39 (3.0 - 4.0, 22 - 29)	25 (0.98)

- Installation is in the reverse order of removal.

Case Components

NGMT0007S01

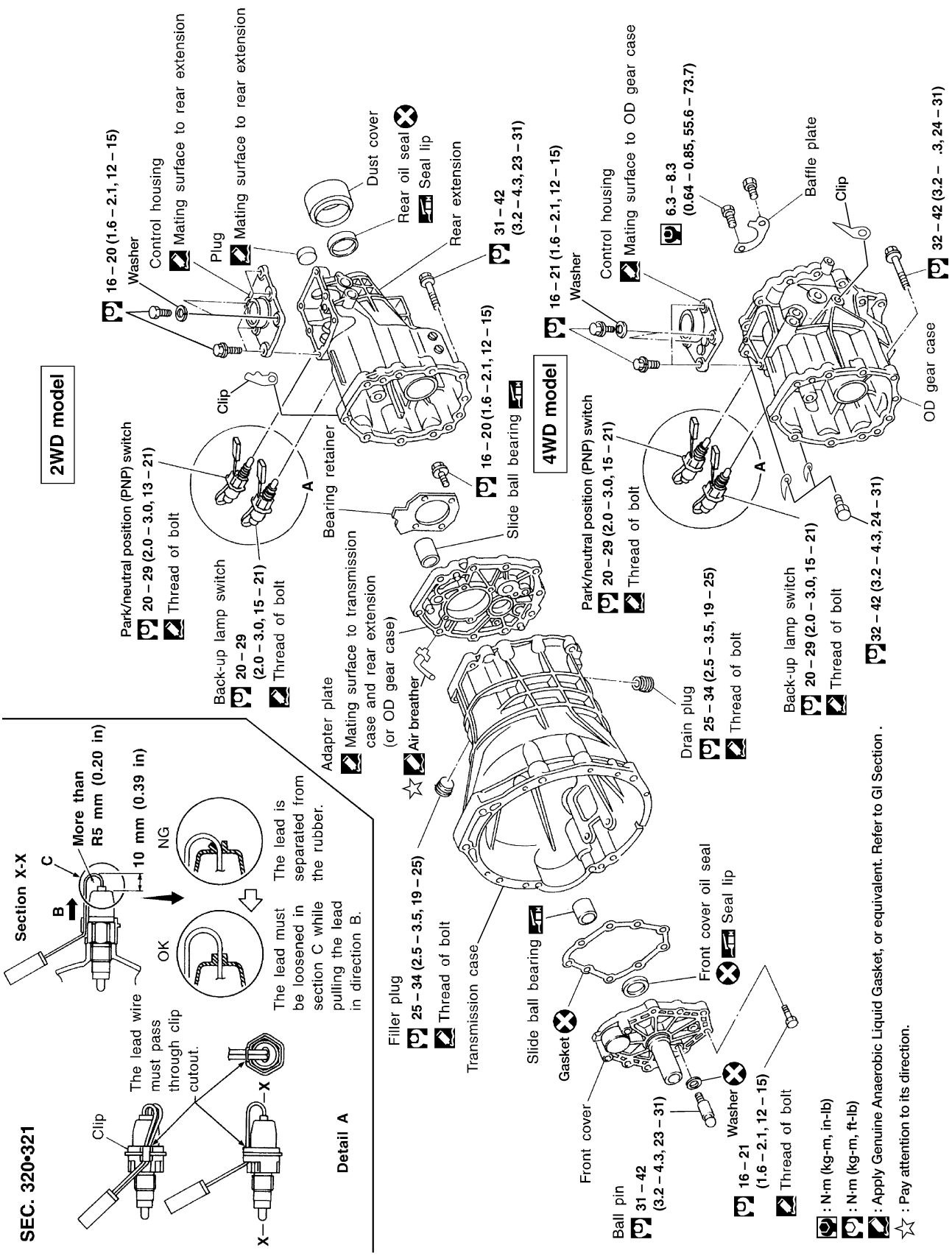

WMT060

Gear Components

NGMT0007S02

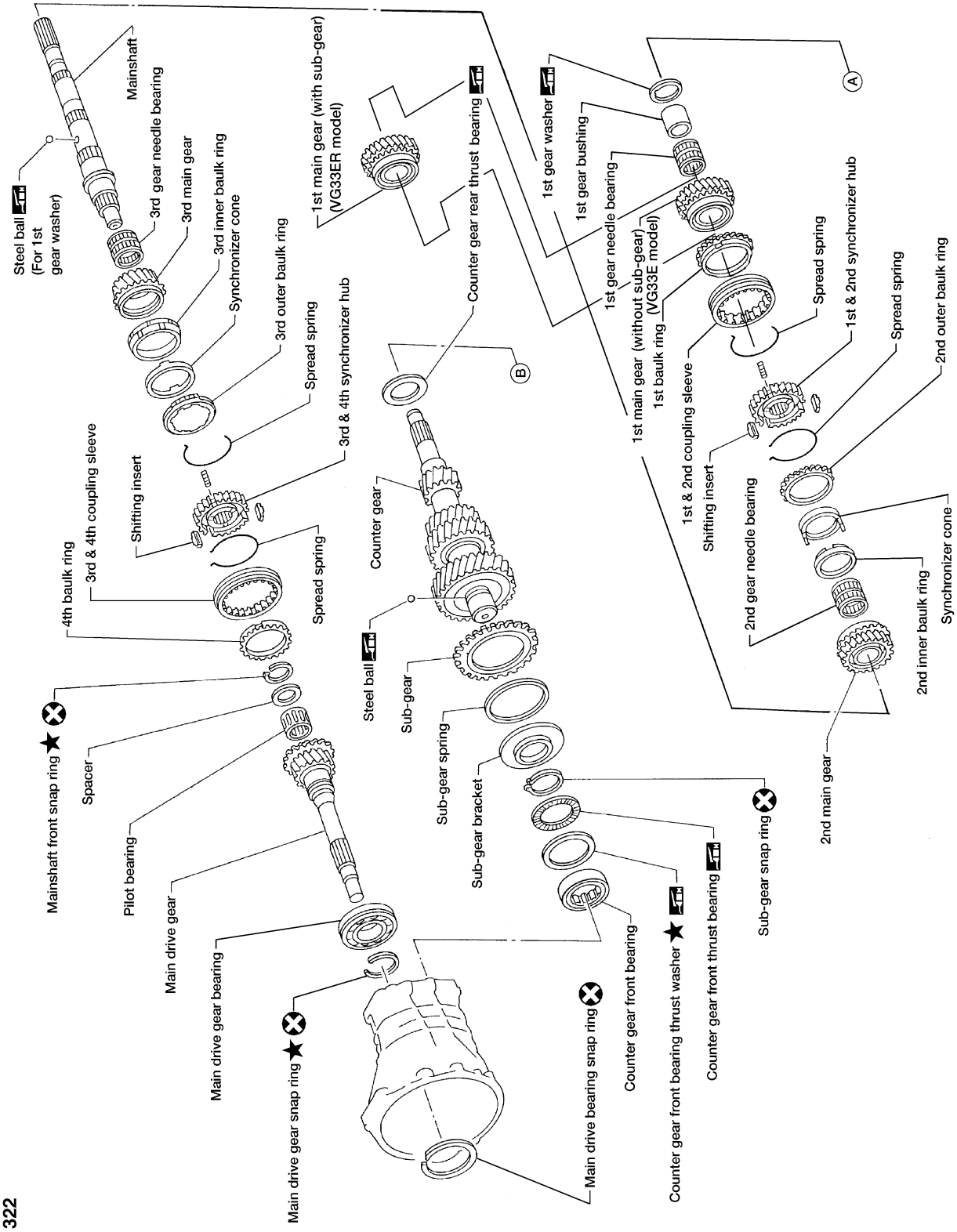

WMT064

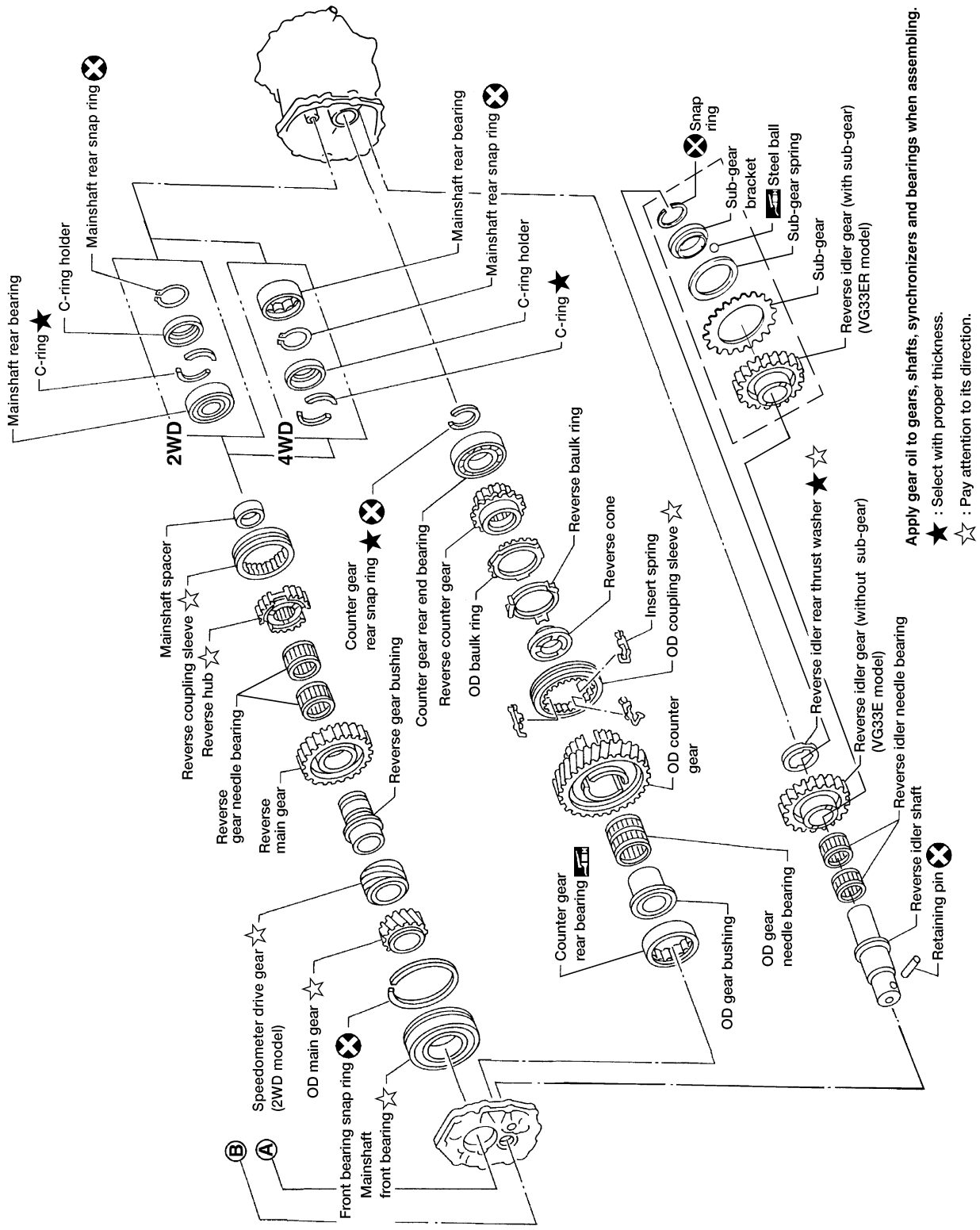

SEC. 322

WMT048

Shift Control Components

NGMT0007S03

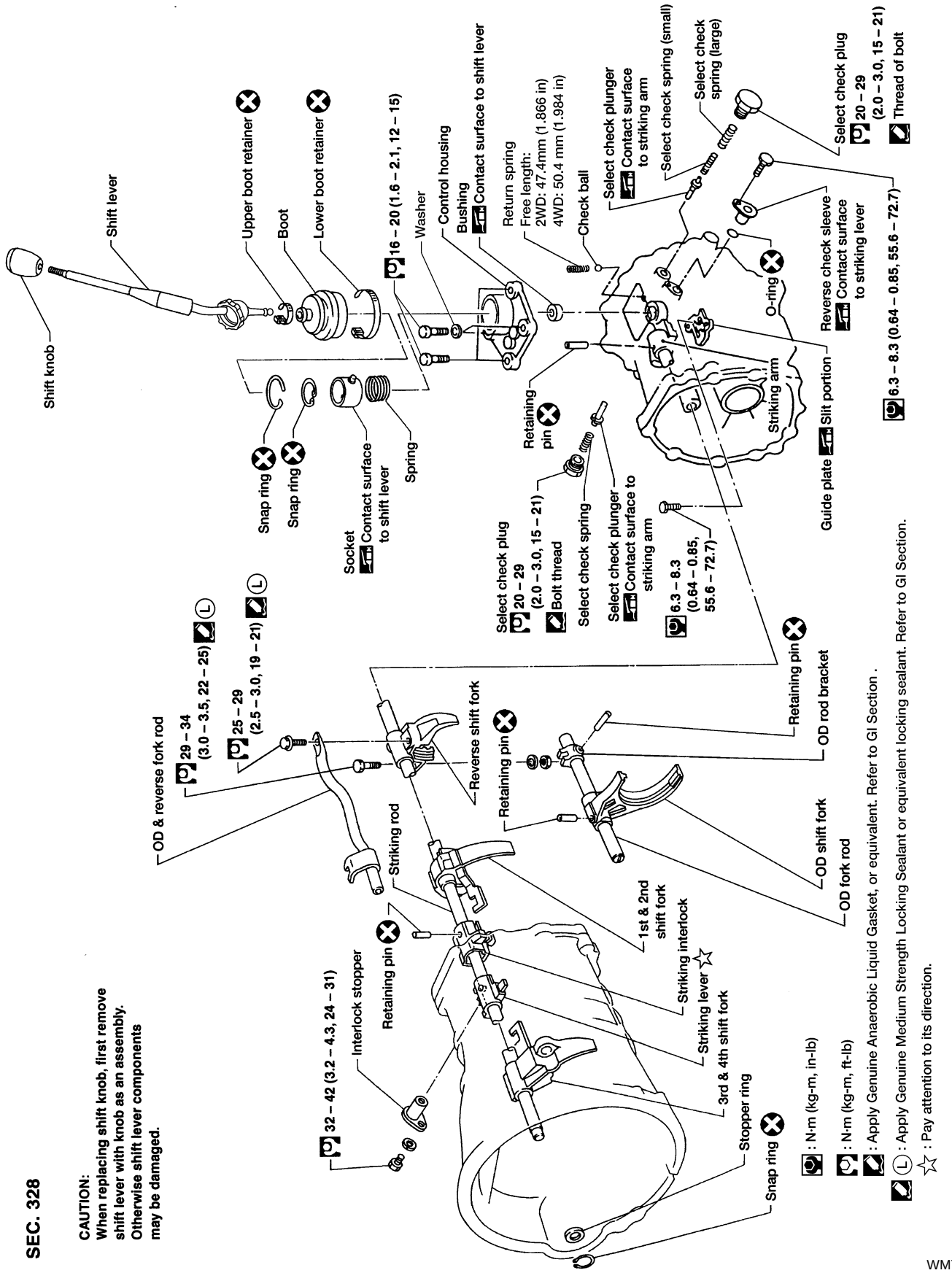

SEC. 328

CAUTION:
When replacing shift knob, first remove shift lever with knob as an assembly. Otherwise shift lever components may be damaged.

WMT061

Case Components

DISASSEMBLY

NGMT0008

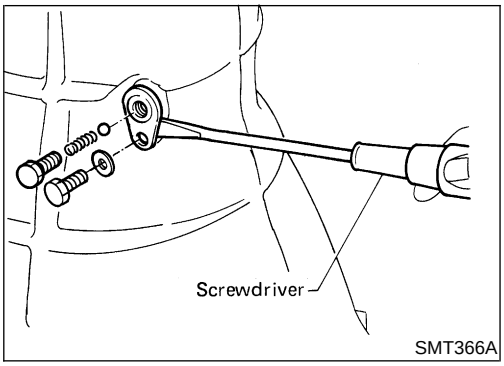

SMT366A

1. Remove check ball plug, check spring and check ball. Then remove interlock stopper.

- **If interlock assembly is removed as a unit, the check ball can fall into transmission case.**
- **Be careful not to lose check ball.**

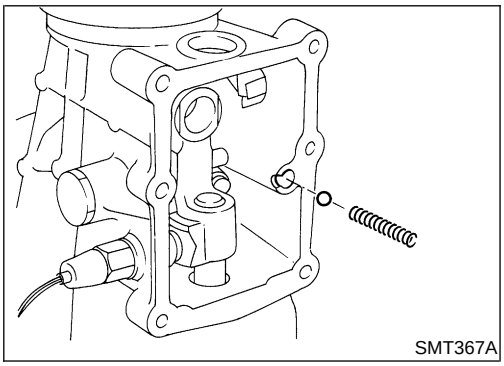
SMT367A

2. Remove control housing, return spring and check ball.

- **Be careful not to lose check ball.**

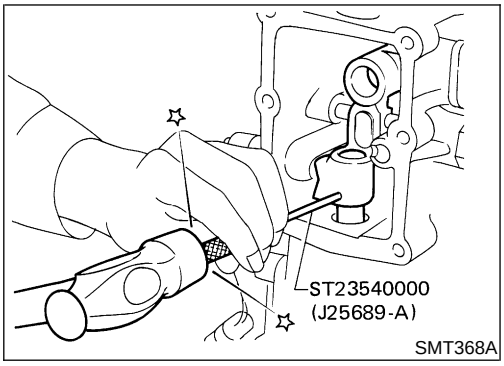

SMT368A

3. Drive out retaining pin from striking arm.

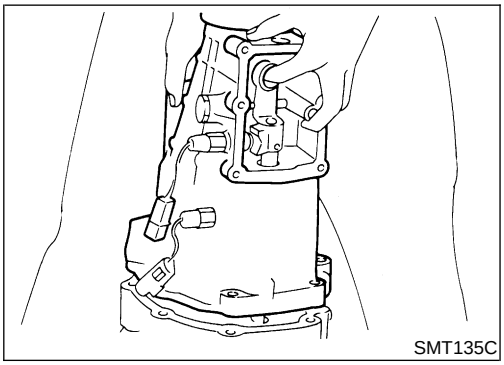
SMT135C

4. Remove rear extension (or OD gear case) together with striking arm by tapping lightly.

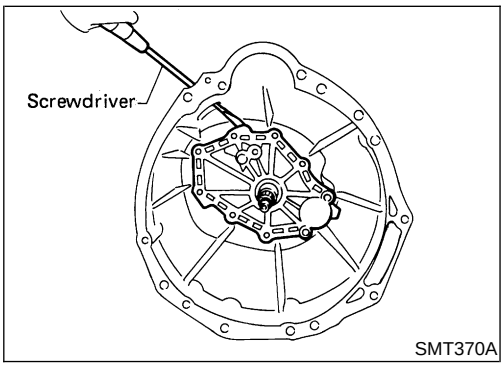

SMT370A

5. Remove front cover and gasket.

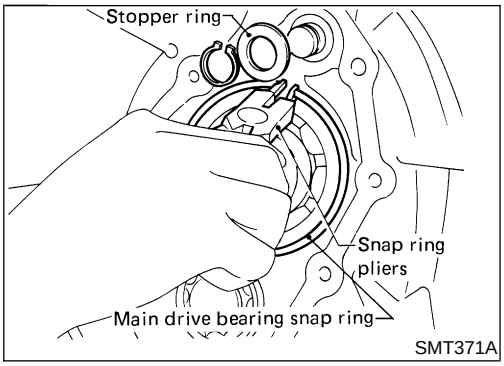

SMT371A

6. Remove stopper ring and main drive bearing snap ring.

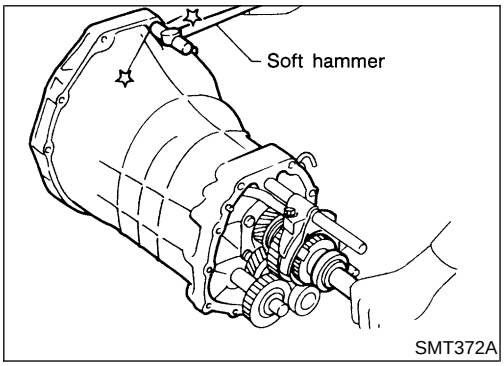

SMT372A

7. Remove transmission case by tapping lightly.

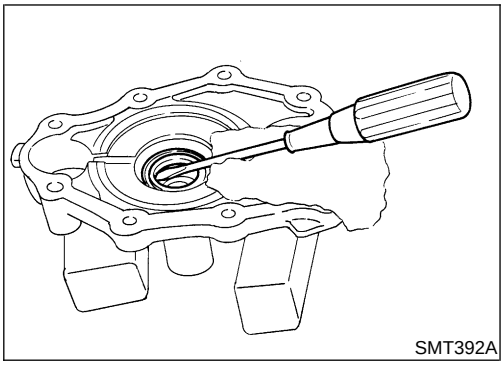
SMT392A

8. Remove front cover oil seal.

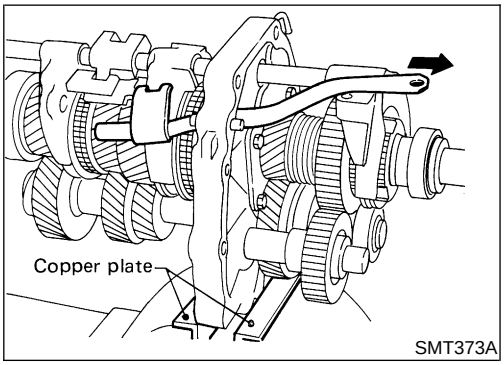

SMT373A

Shift Control Components

DISASSEMBLY

NGMT0009

1. Mount adapter plate on vise.
2. Remove OD and reverse fork rod.

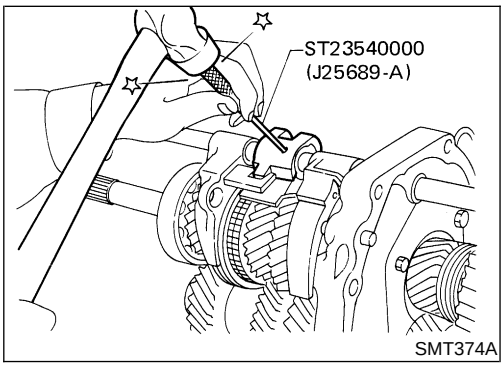

SMT374A

3. Drive out retaining pin from striking lever.
4. While pulling out striking rod, remove striking lever and striking interlock. Then remove 1st and 2nd, 3rd and 4th and reverse shift fork.

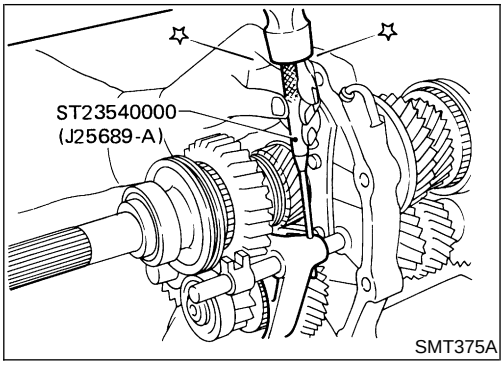

SMT375A

5. Drive out retaining pin from OD shift fork.
6. Pull out OD fork rod and then remove OD shift fork.

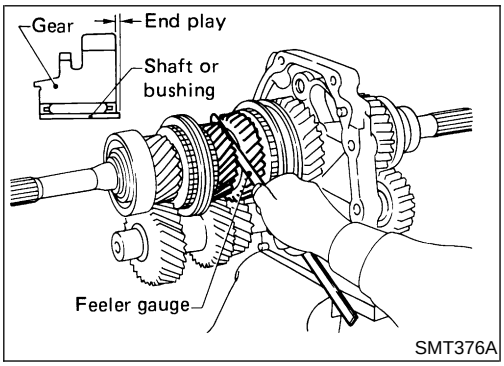

SMT376A

Gear Components

DISASSEMBLY

NGMT0010

1. Before removing gears and shafts, measure each gear end play. Refer to "Gear End Play", MT-67.

- If not within specification, disassemble and check contact surface of gear to hub, washer, bushing, needle bearing and shaft.

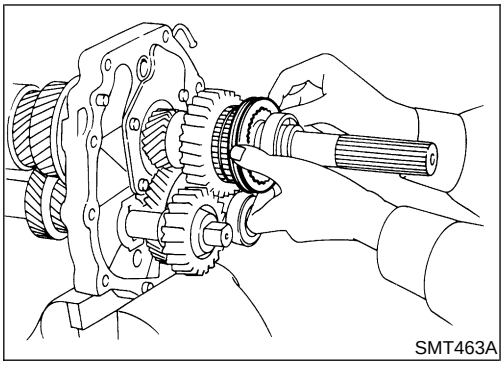
SMT463A

2. Remove rear side components on mainshaft and counter gear.

a. Remove reverse coupling sleeve.

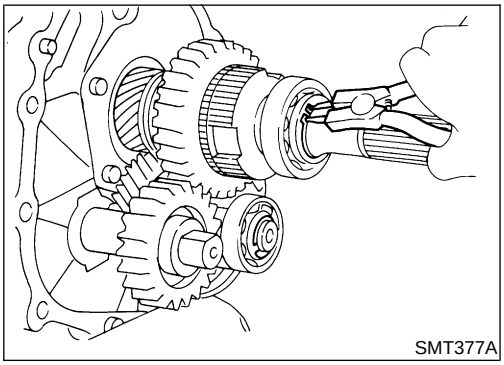
SMT377A

b. Remove mainshaft rear snap ring and counter gear rear snap ring.

c. Remove C-ring holder and mainshaft C-rings from mainshaft. Use punch and hammer to remove C-rings.

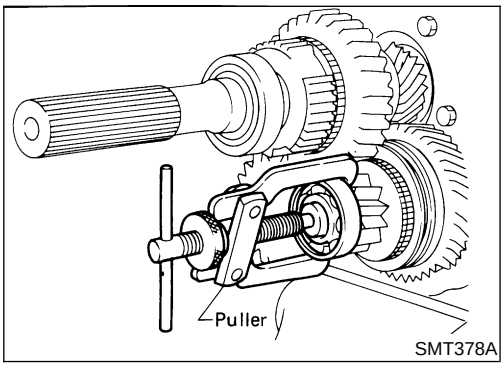

SMT378A

d. Pull out counter gear rear end bearing.

e. Remove reverse idler gear and reverse idler thrust washers.

f. Pull out mainshaft rear bearing (2WD model).

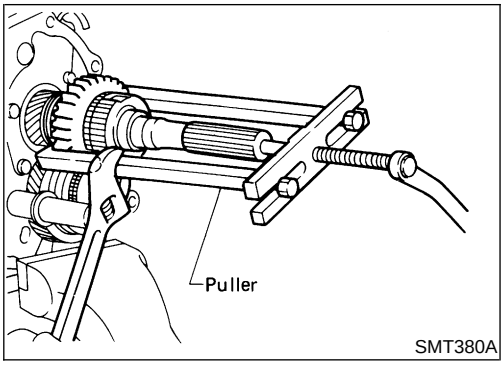

SMT380A

g. Pull out reverse main gear together with mainshaft spacer and reverse synchronizer hub. Then remove reverse gear needle bearings.

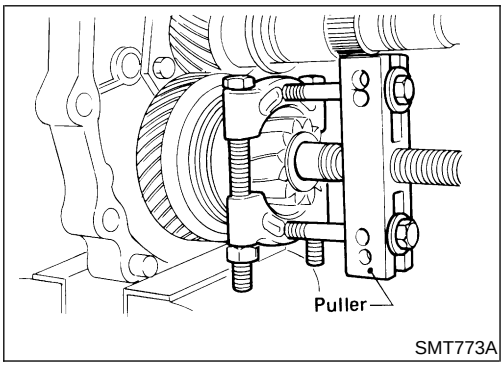

SMT773A

h. Pull out reverse counter gear.

i. Remove OD coupling sleeve together with OD baulk ring, reverse baulk ring and spring inserts.

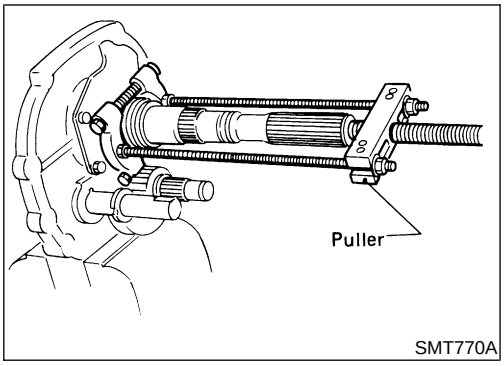

SMT770A

j. Pull out reverse gear bushing.

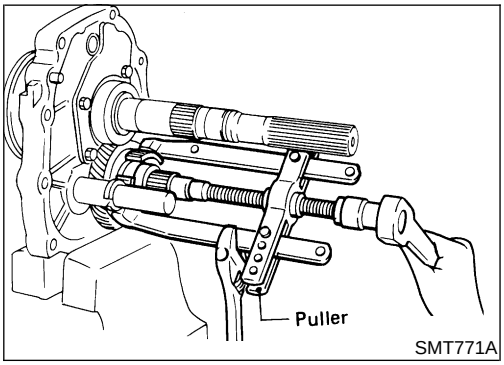

SMT771A

k. Pull out OD counter gear together with reverse cone.

3. Press out mainshaft and counter gear alternately.

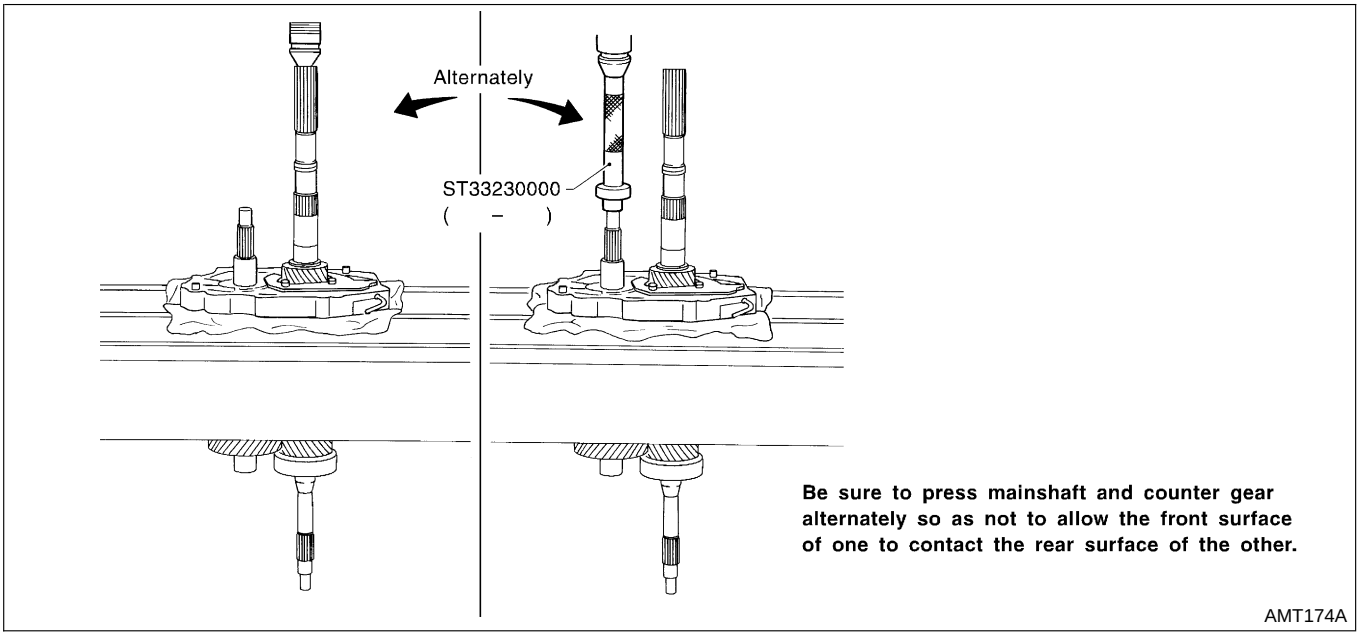

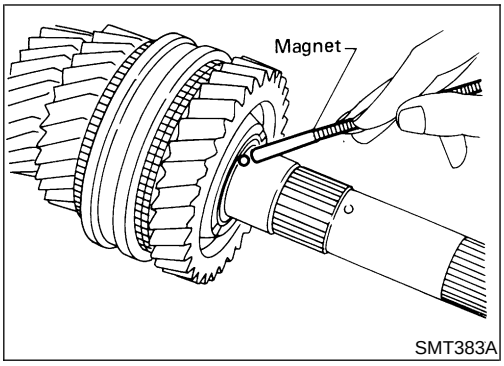

4. Remove front side components on mainshaft.
a. Remove 1st gear washer and steel ball.
b. Remove 1st main gear and 1st gear needle bearing.
- **Be careful not to lose steel ball.**

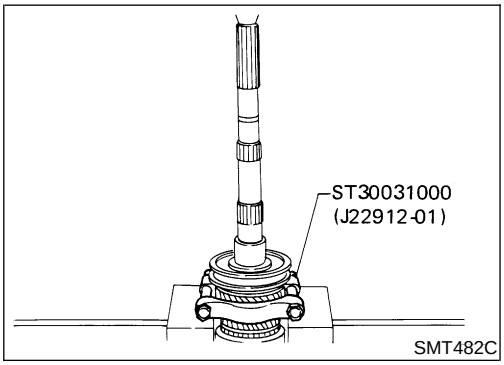

c. Press out 2nd main gear together with 1st gear bushing and 1st and 2nd synchronizer assembly.
d. Remove mainshaft front snap ring.

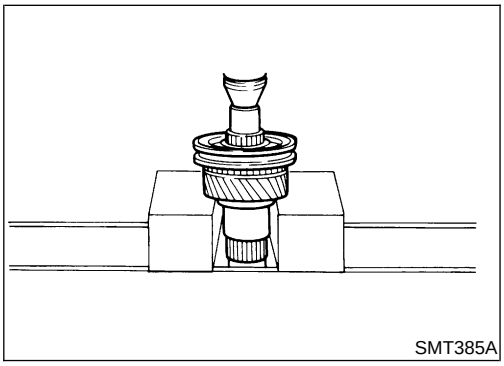

e. Press out 3rd main gear together with 3rd and 4th synchronizer assembly and 3rd gear needle bearing.

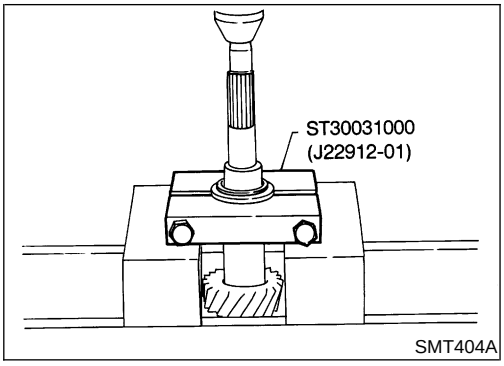

5. Remove front side components on counter gear.
a. Remove counter gear rear thrust bearing.

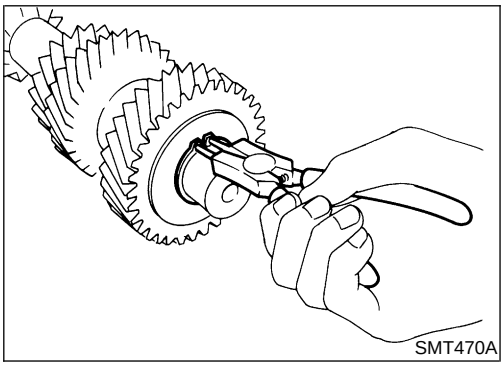

b. Remove sub-gear components.

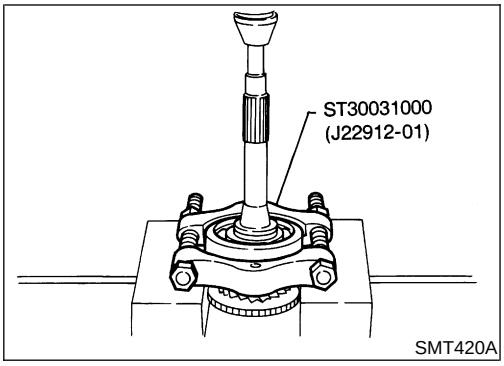

6. Remove main drive gear bearing.
a. Remove main drive gear snap ring.
b. Press out main drive gear bearing.

7. Remove bearings from case components.

Counter gear front bearing in transmission case

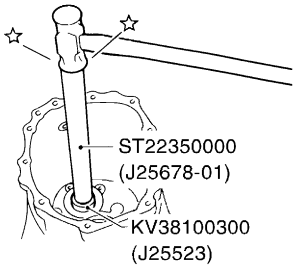

Mainshaft front bearing in adapter plate

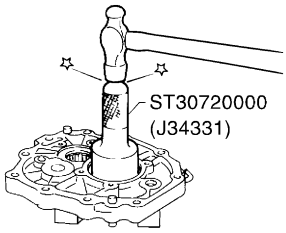

Mainshaft rear bearing in OD gear case

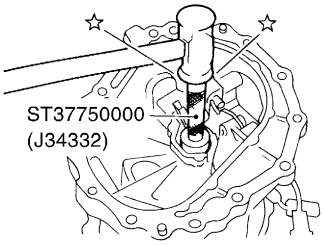

Counter gear rear bearing in adapter plate

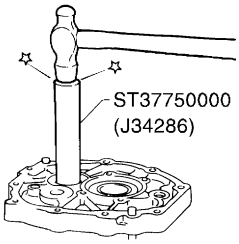

AMT173

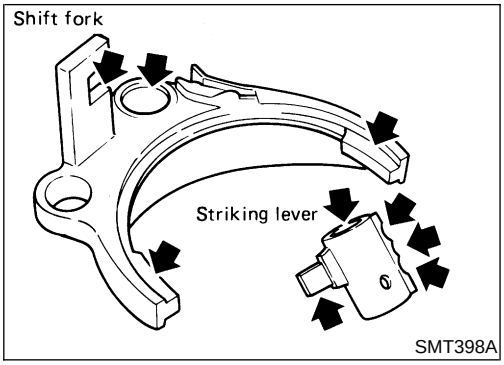

SMT398A

Shift Control Components

INSPECTION

NGMT0011

- Check contact surface and sliding surface for wear, scratches, projections or other damage.

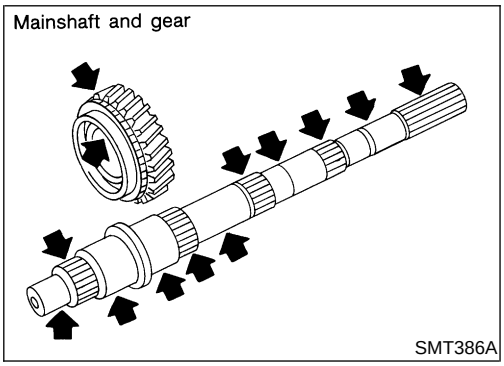

SMT386A

Gear Components

INSPECTION

NGMT0012

Gears and Shafts

NGMT0012S01

- Check shafts for cracks, wear or bending.
- Check gears for excessive wear, chips or cracks.

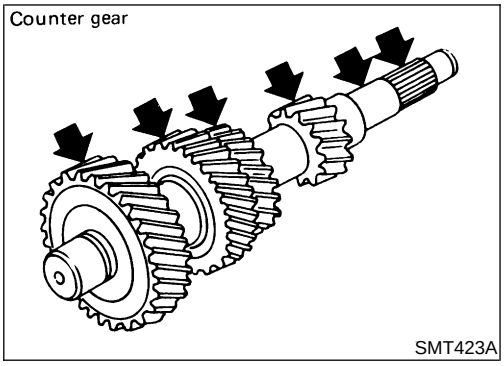

SMT423A

Synchronizers

NGMT0012S02

- Check spline portion of coupling sleeves, hubs, and gears for wear or cracks.
- Check baulk rings for cracks or deformation.
- Check shifting inserts for wear or deformation.
- Check insert springs for deformation.

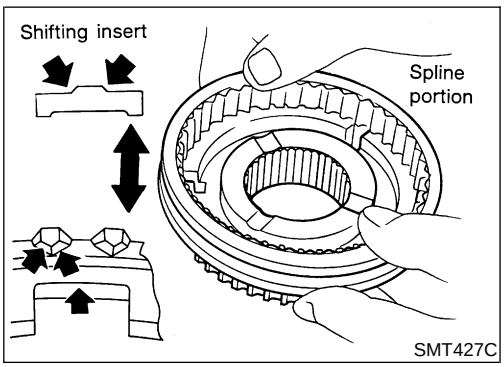

SMT427C

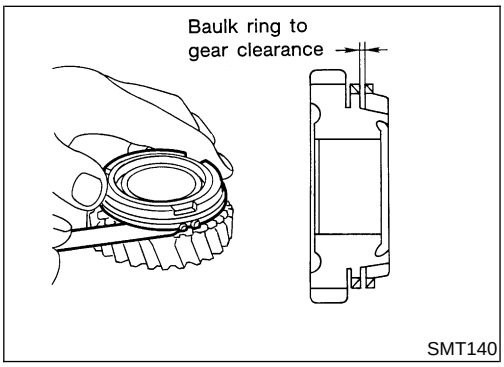

SMT140

- Measure wear of main drive, 1st and OD baulk rings. Refer to “Clearance Between Baulk Ring and Gear”, MT-67.
- If the clearance is smaller than the wear limit, replace baulk ring.

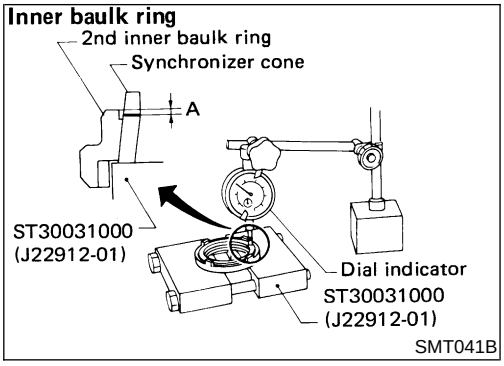

- Measure wear of 2nd and 3rd baulk rings.

a) Place baulk rings in position on synchronizer cone.

b) While holding baulk rings against synchronizer cone as far as it will go, measure dimensions "A" and "B".

Standard:

A 0.7 - 0.9 mm (0.028 - 0.035 in)

B 0.6 - 1.1 mm (0.024 - 0.043 in)

Wear limit:

0.2 mm (0.008 in)

- If dimension "A" or "B" is smaller than the wear limit, replace outer baulk ring, inner baulk ring and synchronizer cone as a set.

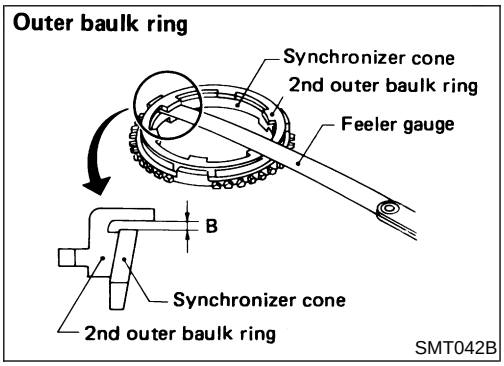

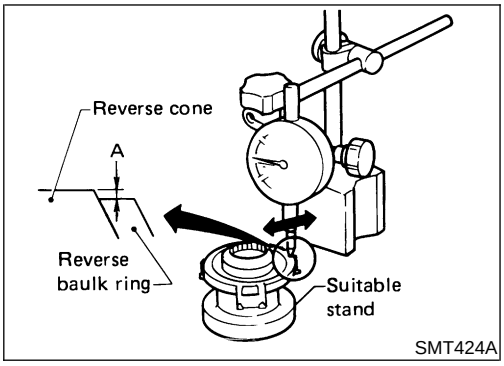

- Measure wear of reverse baulk ring.

a) Place baulk ring in position on reverse cone.

b) While holding baulk ring against reverse cone as far as it will go, measure dimension "A" with dial indicator.

Dimension "A":

Standard 0.35 to 0.95 mm (0.0119 to 0.0295 in)

Wear limit 1.1 mm (0.043 in)

c) If dimension "A" is larger than the wear limit, replace baulk ring.

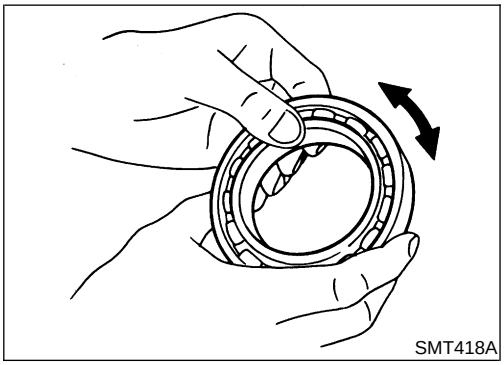

Bearings

NGMT0012S03

- Make sure bearings roll freely and are free from noise, cracks, pitting or wear.

Gear Components
ASSEMBLY

NGMT0013

Counter gear front bearing in transmission case

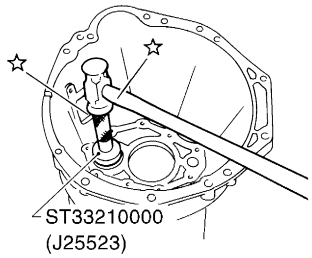

Mainshaft front bearing in adapter plate

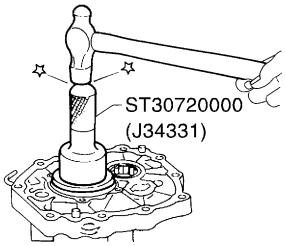

Mainshaft rear bearing in OD gear case

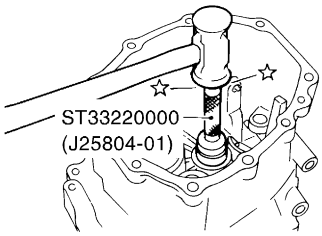

Be flush with front surface of OD gear case.

Counter gear rear bearing in adapter plate

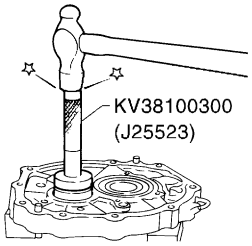

AMT172

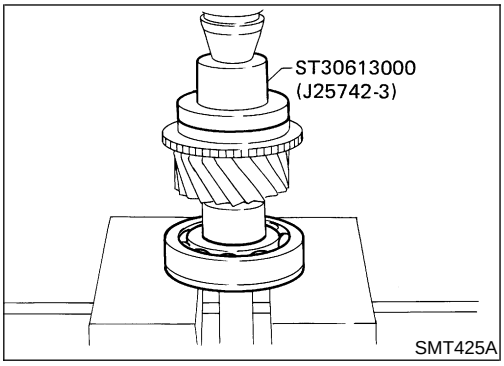

SMT425A

1. Install bearings into case components.
2. Install main drive gear bearing.

a. Press main drive gear bearing.

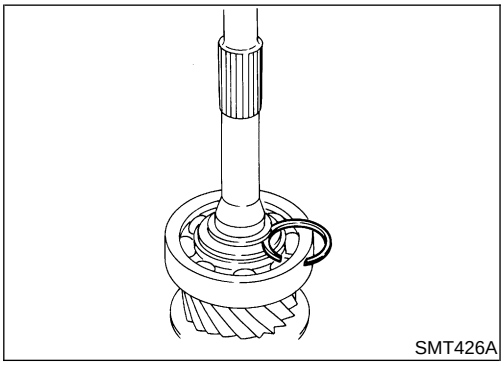

SMT426A

b. Select proper main drive gear snap ring to minimize clearance of groove. Refer to “MAIN DRIVE GEAR SNAP RING”, MT-68.

Allowable clearance of groove:
0 - 0.1 mm (0 - 0.003 in)

c. Install selected snap ring on main drive gear.

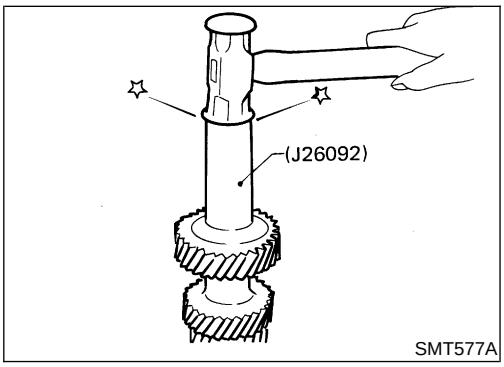

SMT577A

3. Install components on counter gear.

a. Install sub-gear components.

- **When installing sub-gear snap ring, tap sub-gear snap ring into position on counter gear.**

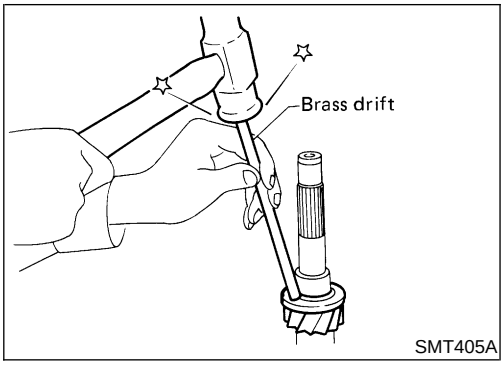

SMT405A

b. Install counter gear rear thrust bearing.

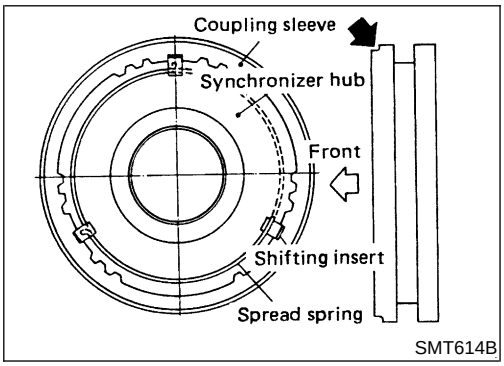

SMT614B

4. Install front side components on mainshaft.

a. Assemble 1st and 2nd synchronizer.

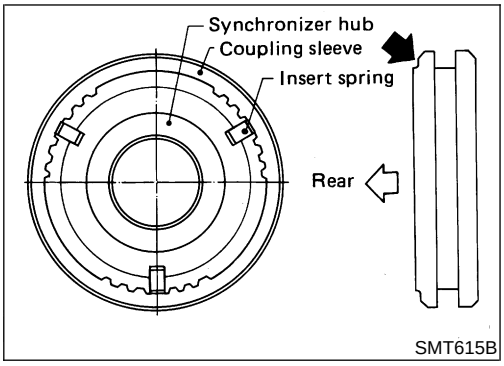

SMT615B

b. Assemble 3rd and 4th synchronizer.

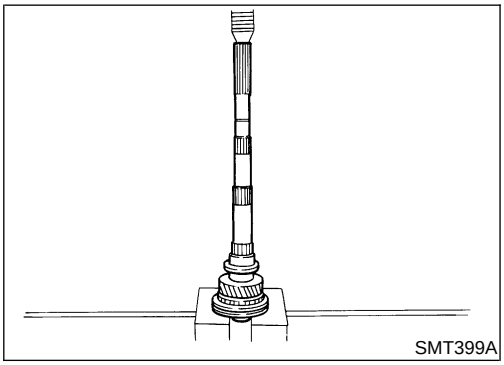
SMT399A

c. Press on 3rd and 4th synchronizer assembly together with 3rd main gear and 3rd gear needle bearing.

- **Pay attention to direction of synchronizer assembly.**

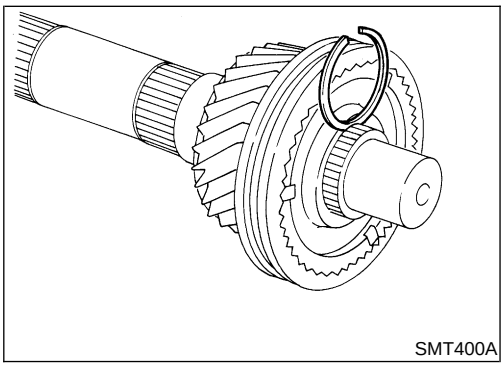
SMT400A

d. Select proper snap ring to minimize clearance of groove. Refer to "MAINSHAFT FRONT SNAP RING", MT-68.

Allowable clearance of groove:
0 - 0.1 mm (0 - 0.003 in)

e. Install selected snap ring on mainshaft.

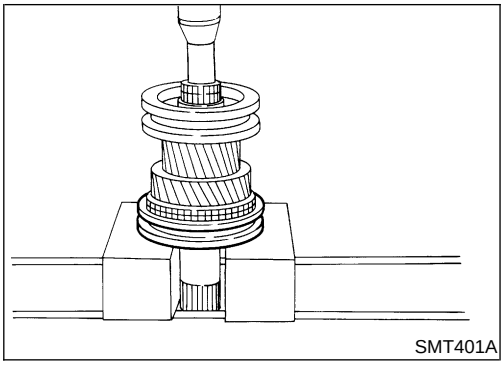
SMT401A

f. Press on 1st and 2nd synchronizer assembly together with 2nd main gear and 2nd gear needle bearing.

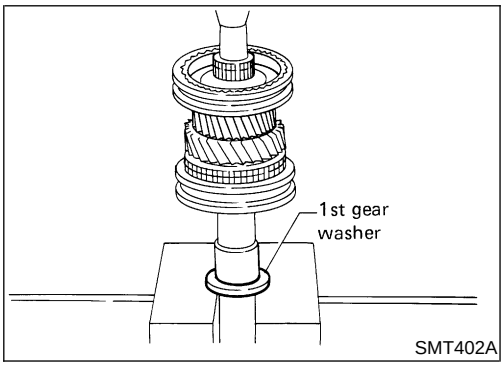

SMT402A

g. Press on 1st gear bushing using 1st gear washer.
h. Install 1st main gear and needle bearing.

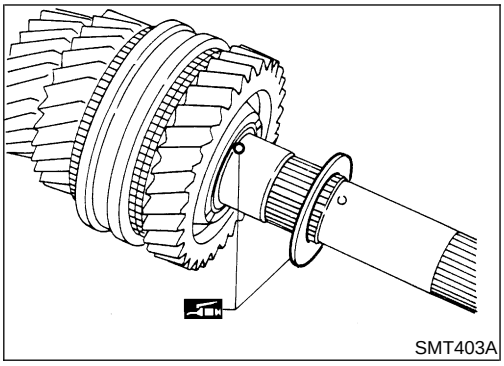
SMT403A

i. Install steel ball and 1st gear washer.
- **Apply multi-purpose grease to steel ball and 1st gear washer before installing.**

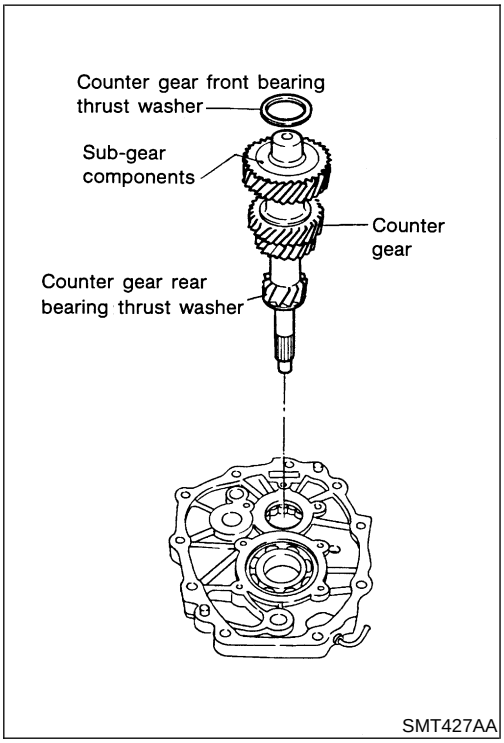

SMT427AA

5. Select proper counter gear front bearing thrust washer when replacing transmission case, counter gear, counter gear rear thrust bearing or sub-gear components.
a. Install counter gear with sub-gear components, counter gear front and rear bearing thrust washer on adapter plate.
b. Remove counter gear front bearing thrust washer from transmission case.
c. Place adapter plate and counter gear assembly in transmission case (case inverted).

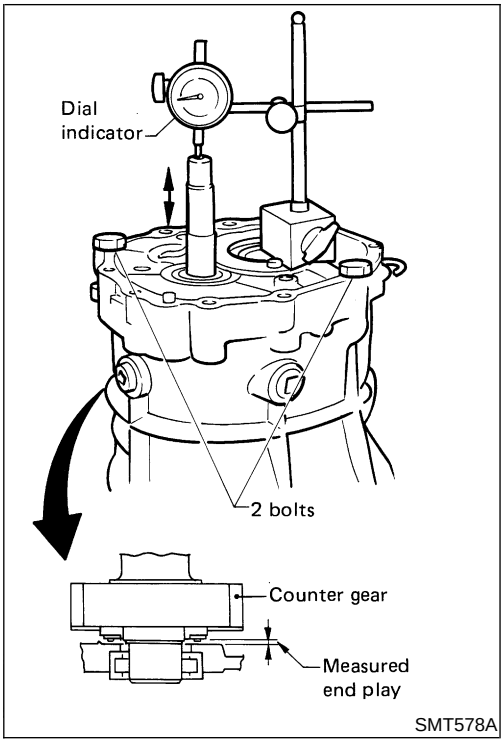

d. Tighten adapter plate to transmission case using 2 bolts.
e. Place dial indicator on rear end of counter gear.
f. Move counter gear up and down and measure dial indicator deflection.
g. Select proper thrust washer using table below as a guide. Refer to "TABLE FOR SELECTING PROPER COUNTER GEAR FRONT BEARING THRUST WASHER", MT-69.

Counter gear end play:
0.10 - 0.26 mm (0.0040 - 0.0102 in)

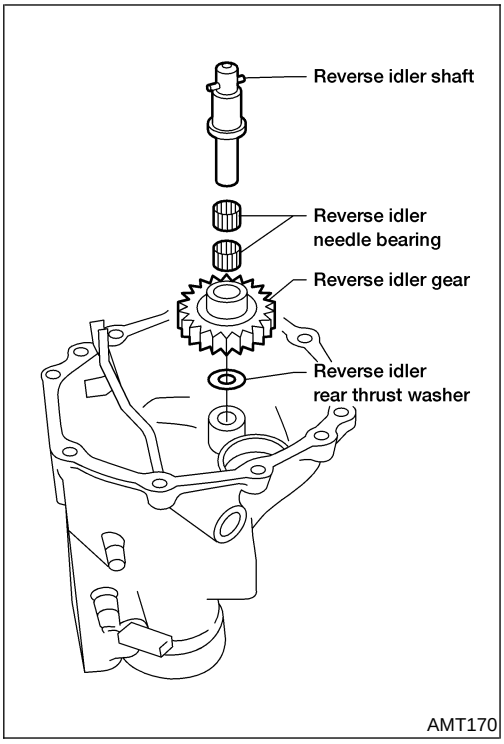

6. Select proper reverse idler rear thrust washer when replacing rear extension (or OD gear case), reverse idler gear, reverse idler shaft or reverse idler front thrust washer.
a. Install reverse idler gear, reverse idler needle bearings, reverse idler front thrust washers and reverse idler shaft into rear extension (or OD gear case).

- **When replacing reverse idler rear thrust washer, install either A or B. Refer to "REVERSE IDLER REAR THRUST WASHER", MT-70.**

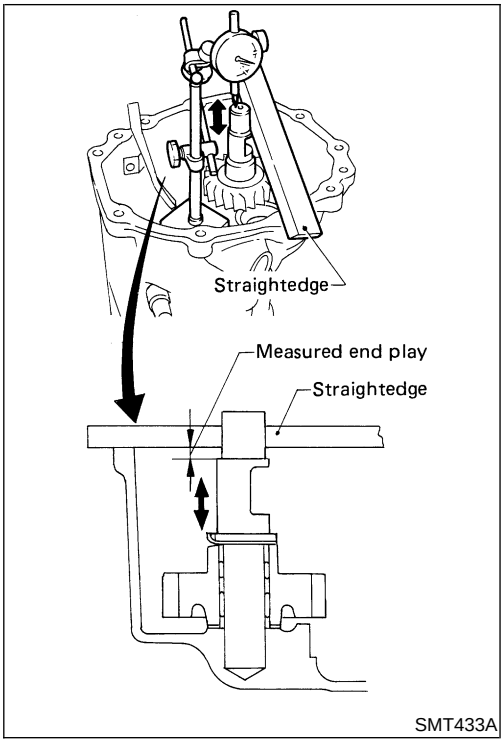

b. Place dial indicator on front end of reverse idler shaft.
c. Put straightedge on front surface of rear extension (or OD gear case) as a stopper of reverse idler shaft.
d. Move reverse idler shaft up and down and measure reverse idler gear end play.

Reverse idler gear end play:
0.30 - 0.53 mm (0.0119 - 0.0208 in)

e. If not within specification, replace reverse idler rear thrust washer with the other (A or B) and check again.

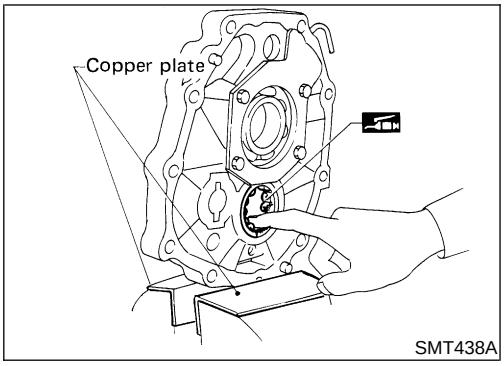

7. Install mainshaft and counter gear on adapter plate and main drive gear on mainshaft.
a. Mount adapter plate on vise and apply multi-purpose grease to counter gear rear bearing.

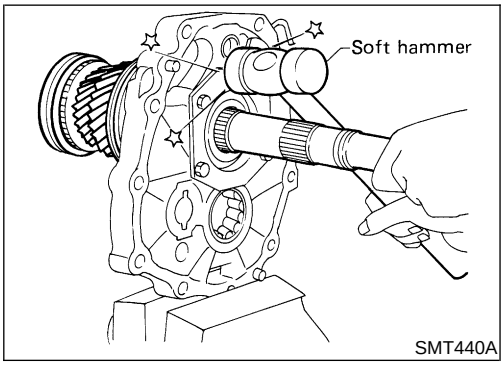

b. Install mainshaft a little on mainshaft front bearing.

- **To allow for installation of counter gear, do not install mainshaft completely.**

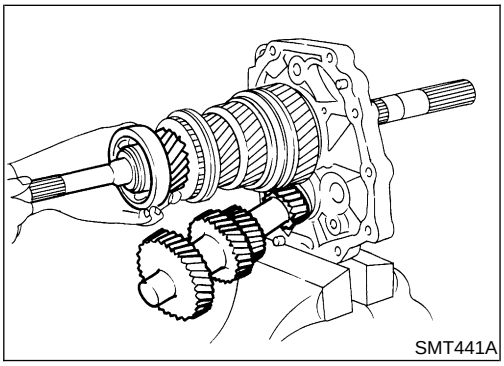

c. Install counter gear on counter gear rear bearing and install main drive gear, pilot bearing and spacer on mainshaft.

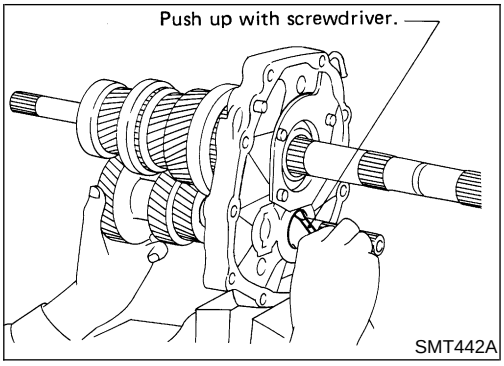

- **When installing counter gear into counter gear rear bearing, push up on upper roller of counter gear rear bearing with screwdriver.**

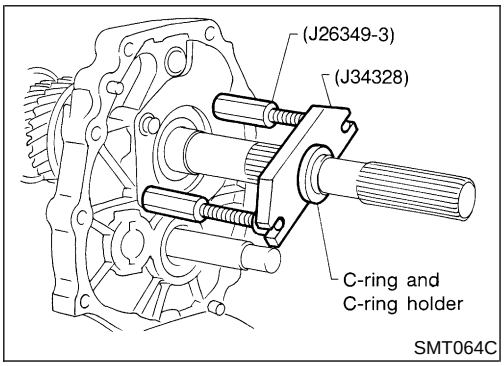

d. Install Tools (J26349-3) onto adapter plate and C-ring and C-ring holder on mainshaft.

e. Install Tool (J34328) on mainshaft.

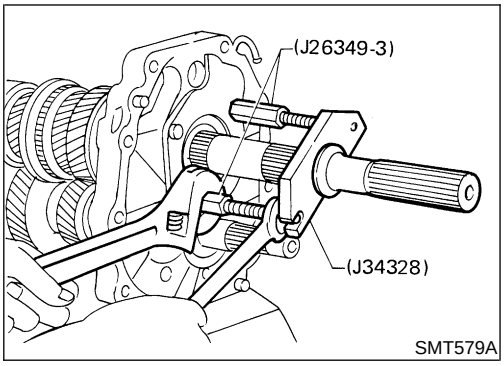

f. Install mainshaft and counter gear completely by extending length of (J26349-3).

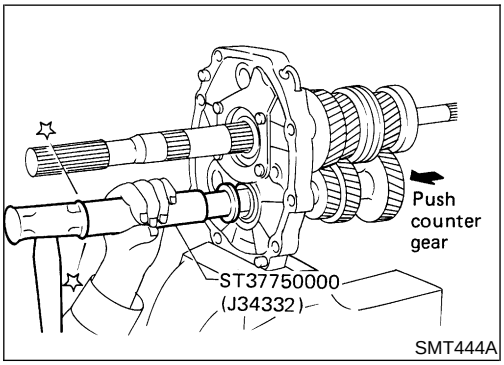

8. Install rear side components on mainshaft and counter gear.

a. Install OD gear bushing while pushing on the front of counter gear.

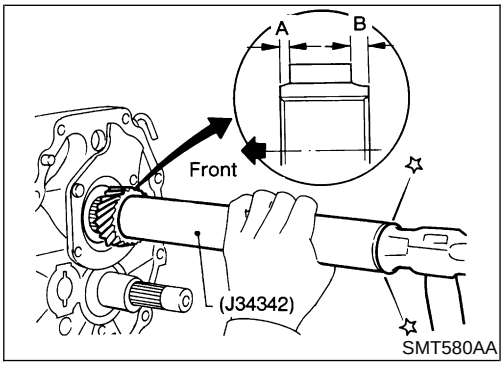

b. Install OD main gear.

- **Pay attention to direction of OD main gear. (B is wider than A as shown at left.)**

c. Install adapter plate with gear assembly onto transmission case.

d. Install OD gear needle bearing and then install OD counter gear and reverse idler shaft.

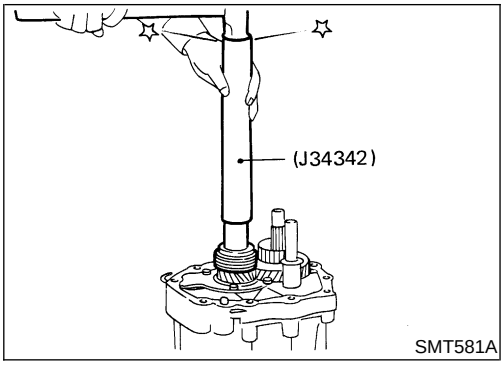

e. Install reverse gear bushing with speedometer drive gear (2WD model).

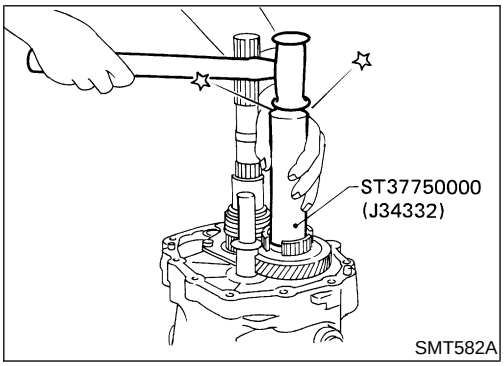

f. Install reverse cone.

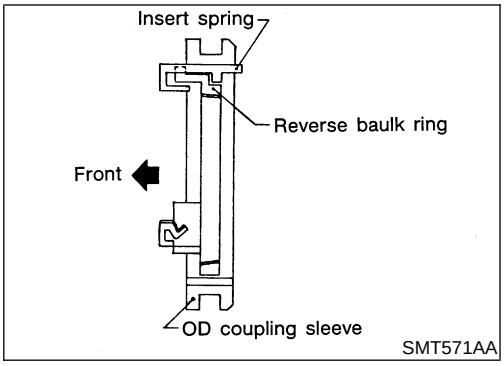

g. Install insert springs and reverse baulk ring on OD coupling sleeve. Then install them and OD baulk ring on OD counter gear.

- **Pay attention to direction of OD coupling sleeve.**

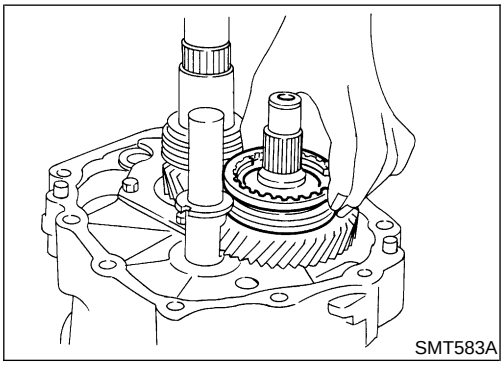

h. Install reverse counter gear.

i. Install reverse gear needle bearing and then install reverse main gear, reverse idler gear and reverse idler thrust washers.

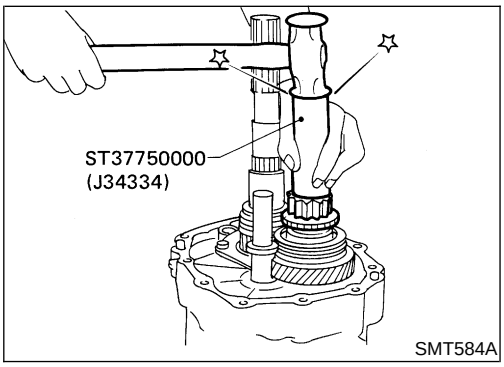

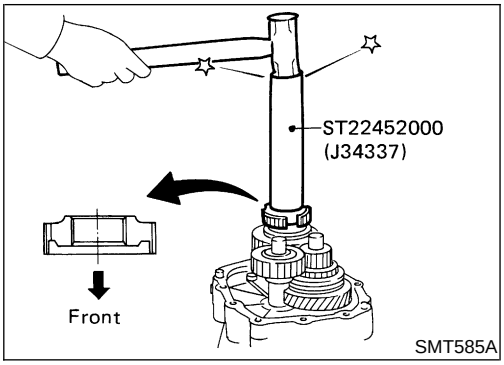

j. Install reverse hub.

- **Pay attention to its direction.**

k. Install mainshaft spacer and mainshaft rear bearing (2WD model).

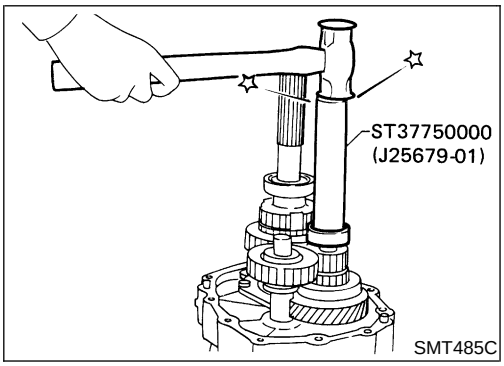

l. Install counter gear rear end bearing.

m. Separate adapter plate from transmission case and mount adapter plate on vise again.

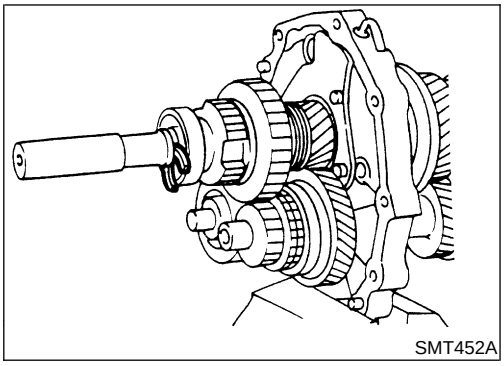

n. Select proper mainshaft C-ring to minimize clearance of groove. Refer to "MAINSHAFT C-RING", MT-69.

Allowable clearance of groove:
0 - 0.1 mm (0 - 0.003 in)

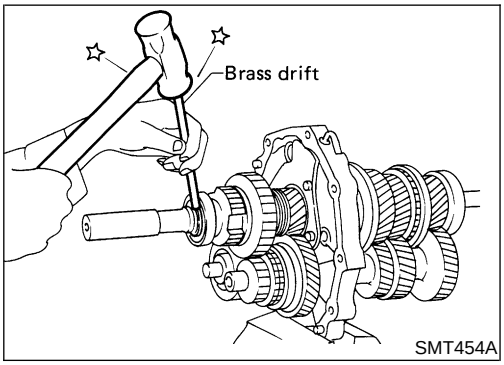

o. Install selected C-ring, C-ring holder and mainshaft rear snap ring.

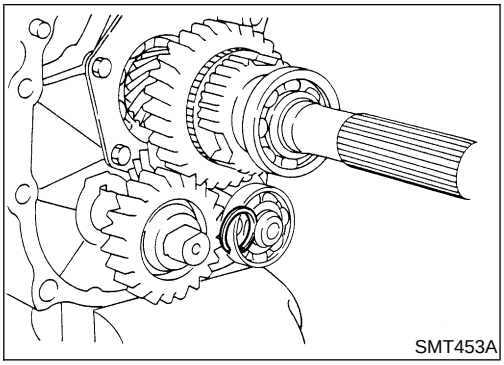
SMT453A

p. Select proper counter gear rear snap ring to minimize clearance of groove. Refer to "COUNTER GEAR REAR SNAP RING", MT-69.

Allowable clearance of groove:
0 - 0.1 mm (0 - 0.003 in)

q. Install selected counter gear rear snap ring.

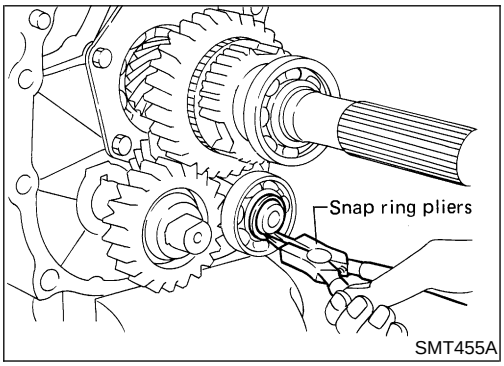

SMT455A

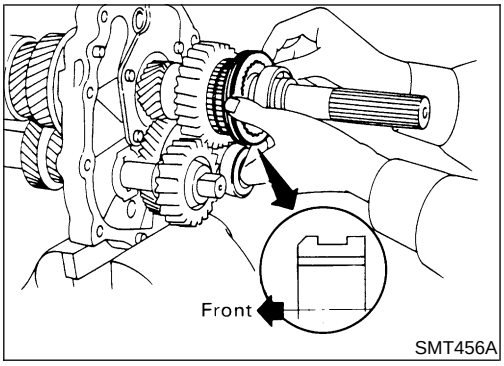

SMT456A

r. Install reverse coupling sleeve.
- **Pay attention to its direction.**

s. Measure each gear end play as a final check. Refer to "DISASSEMBLY", MT-50.

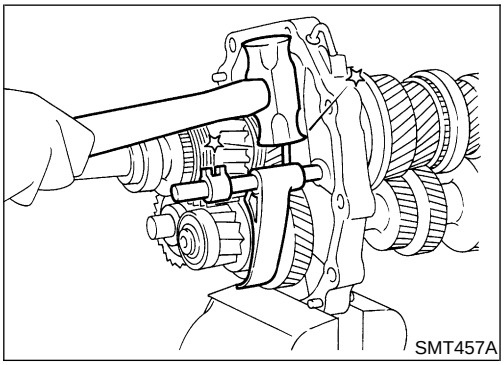
SMT457A

Shift Control Components

ASSEMBLY

NGMT0014

1. Install OD fork rod and OD shift fork. Then install retaining pin into OD shift fork.
2. Install 1st and 2nd, 3rd and 4th and reverse shift fork onto coupling sleeve.

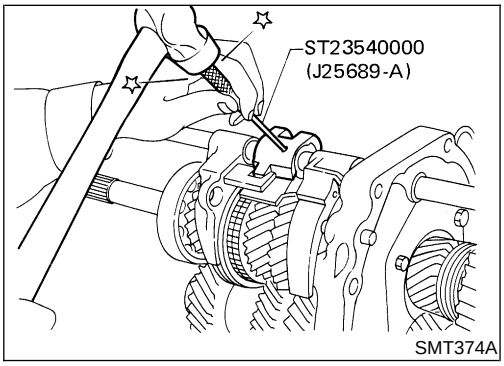

SMT374A

3. Install striking rod into hole of shift forks, striking lever and interlock and then install retaining pin into striking lever.
- **Make sure that striking rod moves smoothly.**

Case Components

ASSEMBLY

NGMT0015

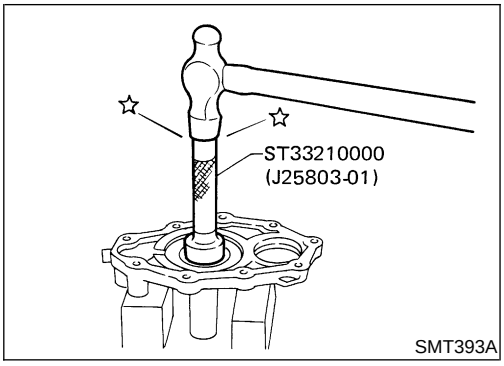

SMT393A

1. Install front cover oil seal.
- **Apply multi-purpose grease to seal lip.**
2. Install selected counter gear front bearing shim onto transmission case.
- **Apply multi-purpose grease.**
3. Apply sealant to mating surface of transmission case.

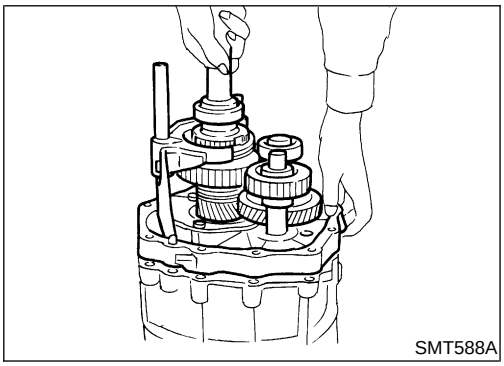
SMT588A

4. Install gear assembly onto transmission case.
5. Install check spring and check ball into interlock stopper.
- **Apply multi-purpose grease to check ball.**

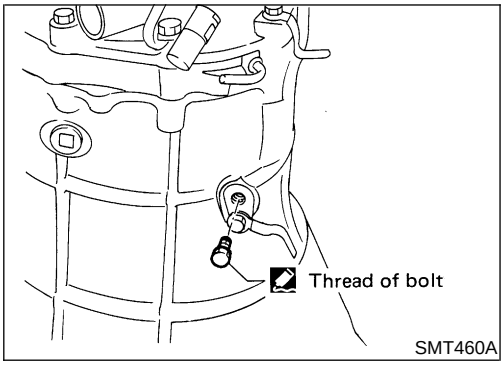

SMT460A

6. Install interlock stopper assembly and then tighten check ball plug. Refer to “Shift Control Components”, MT-47.
- **Apply sealant to thread of check ball plug.**

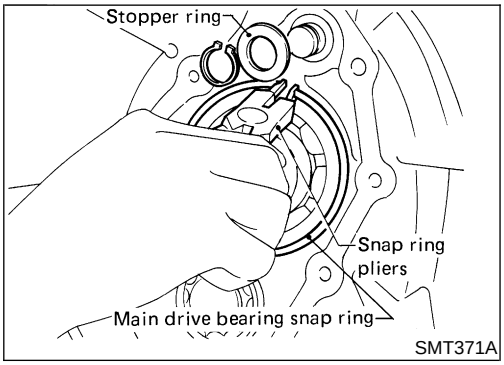

SMT371A

7. Install stopper ring and main drive bearing snap ring.

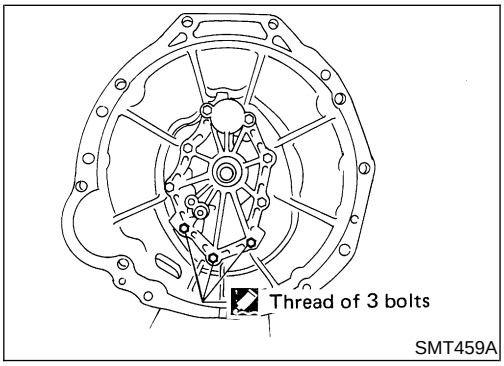

SMT459A

8. Install front cover and gasket. Refer to “Case Components”, MT-44.
- **Apply sealant to thread of 3 bolts shown left.**
9. Apply sealant to mating surface of adapter plate.

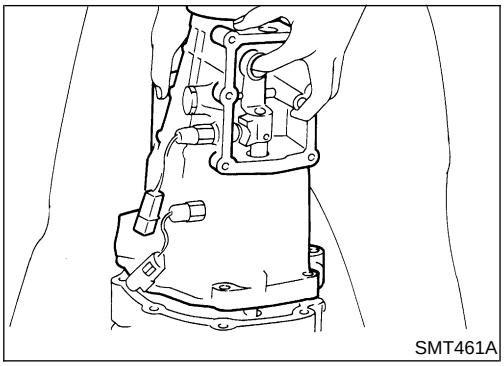

10. Install OD gear case together with striking arm.

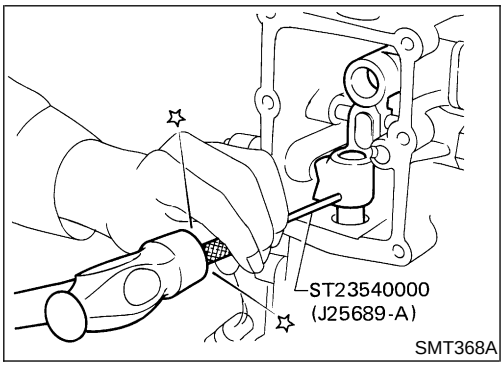

11. Install retaining pin into striking arm.

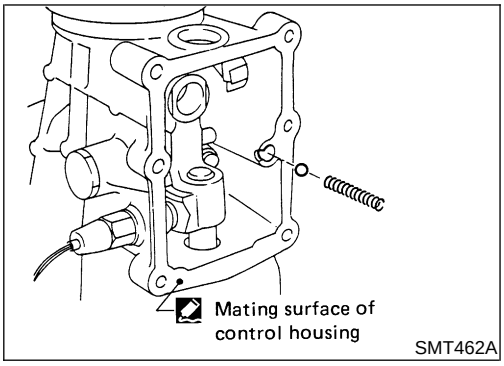

12. Install return spring and check ball and then install control housing. Refer to "Case Components", MT-44.
- **Apply Genuine Anaerobic Liquid Gasket, or equivalent, to the mating surface of OD gear case.**

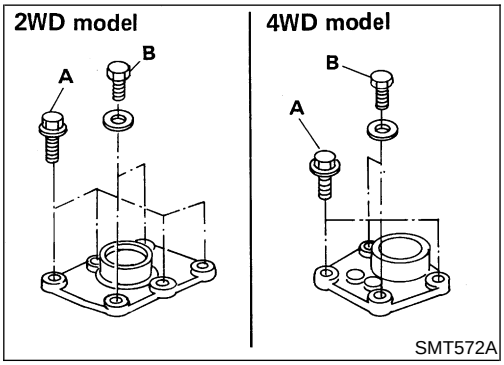

13. Tighten control housing bolts.

    Bolt head size:

    A bolts 12 mm (0.47 in)

    B bolts 13 mm (0.51 in)

General Specifications

NGMT0016

	VG33E/VG33ER	
Transmission	FS5R30A	
	2WD	4WD
Number of speed	5	
Shift pattern	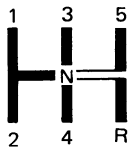 MT-SDS-2	
Synchromesh type	Warner	

	Gear ratio	Number of teeth	
		Mainshaft	Countershaft
Drive	—	22	32
1st	3.580	32	13
2nd	2.077	30	21
3rd	1.360	29	31
4th	1.000	—	—
OD	0.811	24	43
Reverse	3.636	30	12
Reverse idler gear	22		
Oil capacity ℓ (US pt, Imp pt)	2.8 (5-7/8, 4-7/8) — 2WD model		5.1 (10-3/4, 9) — 4WD model
Remarks	2nd & 3rd double baulk ring type synchronizer		

Gear End Play

NGMT0017
Unit: mm (in)

Gear	End play
1st main gear	0.23 - 0.33 (0.0091 - 0.0129)
2nd main gear	0.23 - 0.33 (0.0091 - 0.0129)
3rd main gear	0.06 - 0.16 (0.0024 - 0.0062)
OD counter gear	0.23 - 0.33 (0.0091 - 0.0129)
Reverse main gear	0.33 - 0.43 (0.0130 - 0.0169)
Counter gear	0.10 - 0.26 (0.0040 - 0.0102)
Reverse idler gear	0.30 - 0.53 (0.0119 - 0.0208)

Clearance Between Baulk Ring and Gear

NGMT0018
Unit: mm (in)

	Standard	Wear limit
1st	1.05 - 1.30 (0.0414 - 0.0511)	0.7 (0.028)
Main drive	1.05 - 1.30 (0.0414 - 0.0511)	
OD	1.05 - 1.30 (0.0414 - 0.0511)	

Clearance Between Baulk Ring and Gear (Cont'd)

DOUBLE BAULK RING

NGMT0018S01

Unit: mm (in)

VG33E model	2nd & 3rd baulk rings
VG33ER model	1st, 2nd & 3rd baulk rings

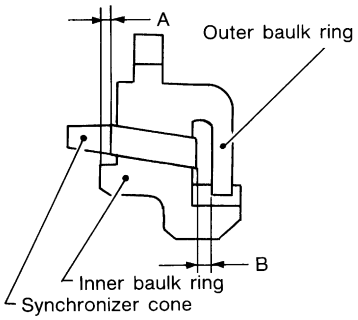

SMT742C

Dimension	Standard	Wear limit
A	0.7 - 0.9 (0.028 - 0.035)	0.2 (0.008)
B	0.6 - 1.1 (0.024 - 0.043)	

Distance between Rear Surface of Reverse Cone and Reverse Baulk Ring

NGMT0019

Unit: mm (in)

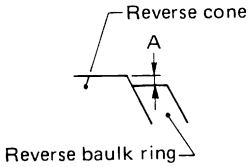

SMT428C

Dimension	Standard	Wear limit
A	0.35 to 0.95 (0.0119 to 0.0295)	1.1 (0.043)

Available Snap Ring

NGMT0020

MAIN DRIVE GEAR SNAP RING

NGMT0020S01

Unit: mm (in)

Allowable clearance 0 - 0.1 (0 - 0.003)

Thickness	Part number	Thickness	Part number*
1.89 (0.0744)	32204-01G60	2.03 (0.0799)	32204-01G63
1.95 (0.0768)	32204-01G61	2.07 (0.0815)	32204-01G64
1.99 (0.0783)	32204-01G62	2.11 (0.0831)	32204-01G65

*Always check with the Parts Department for the latest parts information.

MAINSHAFT FRONT SNAP RING

NGMT0020S02

Unit: mm (in)

Allowable clearance 0 - 0.1 (0 - 0.003)

Thickness	Part number	Thickness	Part number*
1.99 (0.0783)	32204-01G62	2.11 (0.0831)	32204-01G65
2.03 (0.0799)	32204-01G63	2.15 (0.0846)	32204-01G66
2.07 (0.0815)	32204-01G64	2.19 (0.0862)	32204-01G67

*Always check with the Parts Department for the latest parts information.

COUNTER GEAR REAR SNAP RING

NGMT0020S03
Unit: mm (in)

Allowable clearance 0 - 0.1 (0 - 0.003)			
Thickness	Part number	Thickness	Part number*
1.32 (0.0520)	32236-01G00	1.56 (0.0614)	32236-01G04
1.38 (0.0543)	32236-01G01	1.62 (0.0638)	32236-01G05
1.44 (0.0567)	32236-01G02	1.68 (0.0661)	32236-01G06
1.50 (0.0591)	32236-01G03	1.74 (0.0685)	32236-01G07

*Always check with the Parts Department for the latest parts information.

Available C-ring

NGMT0021

MAINSHAFT C-RING

NGMT0021S01
Unit: mm (in)

Allowable clearance 0 - 0.1 (0 - 0.003)			
Thickness	Part number	Thickness	Part number*
2.63 (0.1035)	32348-01G15	3.19 (0.1256)	32348-01G07
2.70 (0.1063)	32348-01G00	3.26 (0.1283)	32348-01G08
2.77 (0.1091)	32348-01G01	3.33 (0.1311)	32348-01G09
2.84 (0.1118)	32348-01G02	3.40 (0.1339)	32348-01G10
2.91 (0.1146)	32348-01G03	3.47 (0.1366)	32348-01G11
2.98 (0.1173)	32348-01G04	3.54 (0.1394)	32348-01G12
3.05 (0.1201)	32348-01G05	3.61 (0.1421)	32348-01G13
3.12 (0.1228)	32348-01G06	3.68 (0.1449)	32348-01G14

*Always check with the Parts Department for the latest parts information.

Available Shim and Washer

NGMT0022

TABLE FOR SELECTING PROPER COUNTER GEAR FRONT BEARING THRUST WASHER

NGMT0022S01
Unit: mm (in)

Allowable clearance 0.10 - 0.26 (0.0040 - 0.0102)		
Dial indicator deflection	Thickness of proper washer	Part number*
0.93 - 1.02 (0.0367 - 0.0401)	0.80 (0.0315)	32218-01G00
1.01 - 1.10 (0.0398 - 0.0433)	0.88 (0.0346)	32218-01G11
1.09 - 1.18 (0.0430 - 0.0464)	0.96 (0.0378)	32218-01G12
1.17 - 1.26 (0.0461 - 0.0496)	1.04 (0.0409)	32218-01G13
1.25 - 1.34 (0.0493 - 0.0527)	1.12 (0.0441)	32218-01G14
1.33 - 1.42 (0.0524 - 0.0559)	1.20 (0.0472)	32218-01G04
1.41 - 1.50 (0.0556 - 0.0590)	1.28 (0.0504)	32218-01G15
1.49 - 1.58 (0.0587 - 0.0622)	1.36 (0.0535)	32218-01G16
1.57 - 1.66 (0.0619 - 0.0653)	1.44 (0.0567)	32218-01G17

*Always check with the Parts Department for the latest parts information.

Available Shim and Washer (Cont'd)

REVERSE IDLER REAR THRUST WASHER

=NGMT0022S02

Unit: mm (in)

Allowable clearance 0.30 - 0.53 (0.0119 - 0.0208)		
Thickness		Part number*
A	1.97 (0.0776)	32284-01G10
B	2.07 (0.0815)	32284-01G11

*Always check with the Parts Department for the latest parts information.